www.dynamicpapers.com



Mark Scheme (Results)

January 2025

Pearson Edexcel International Advanced Level In Pure Mathematics (WMA11) Paper 01

www.dynamicpapers.com

Edexcel and BTEC Qualifications

Edexcel and BTEC qualifications are awarded by Pearson, the UK's largest awarding body. We provide a wide range of qualifications including academic, vocational, occupational and specific programmes for employers. For further information visit our qualifications websites at www.edexcel.com or www.btec.co.uk. Alternatively, you can get in touch with us using the details on our contact us page at www.edexcel.com/contactus.

Pearson: helping people progress, everywhere

Pearson aspires to be the world's leading learning company. Our aim is to help everyone progress in their lives through education. We believe in every kind of learning, for all kinds of people, wherever they are in the world. We've been involved in education for over 150 years, and by working across 70 countries, in 100 languages, we have built an international reputation for our commitment to high standards and raising achievement through innovation in education. Find out more about how we can help you and your students at: www.pearson.com/uk

January 2025
Question Paper Log Number P76193A
Publications Code WMA11_01_2501_MS
All the material in this publication is copyright
© Pearson Education Ltd 2025

www.dynamicpapers.com

General Marking Guidance

- All candidates must receive the same treatment. Examiners must mark the first candidate in exactly the same way as they mark the last.
- Mark schemes should be applied positively. Candidates must be rewarded for what they have shown they can do rather than penalised for omissions.
- Examiners should mark according to the mark scheme not according to their perception of where the grade boundaries may lie.
- There is no ceiling on achievement. All marks on the mark scheme should be used appropriately.
- All the marks on the mark scheme are designed to be awarded. Examiners should always award full marks if deserved, i.e. if the answer matches the mark scheme. Examiners should also be prepared to award zero marks if the candidate's response is not worthy of credit according to the mark scheme.
- Where some judgement is required, mark schemes will provide the principles by which marks will be awarded and exemplification may be limited.
- When examiners are in doubt regarding the application of the mark scheme to a candidate's response, the team leader must be consulted.
- Crossed out work should be marked UNLESS the candidate has replaced it with an alternative response.

www.dynamicpapers.com

General Instructions for Marking

1. The total number of marks for the paper is 75.

2. The Edexcel Mathematics mark schemes use the following types of marks:
   - **M** marks: Method marks are awarded for 'knowing a method and attempting to apply it', unless otherwise indicated.
   - **A** marks: Accuracy marks can only be awarded if the relevant method (M) marks have been earned.
   - **B** marks are unconditional accuracy marks (independent of M marks)

   Marks should not be subdivided.

3. Abbreviations

   These are some of the traditional marking abbreviations that will appear in the mark schemes and can be used if you are using the annotation facility on ePEN:
   - bod – benefit of doubt
   - ft – follow through
     - the symbol $\surd$ will be used for correct ft
   - cao – correct answer only
   - cso – correct solution only. There must be no errors in this part of the question to obtain this mark
   - isw – ignore subsequent working
   - awrt – answers which round to
   - SC – special case
   - oe – or equivalent (and appropriate)
   - d… or dep – dependent
   - indep – independent
   - dp – decimal places
   - sf – significant figures
   - * – The answer is printed on the paper or ag- answer given
   - $\sqsubset$ or d… – The second mark is dependent on gaining the first mark

4. All A marks are 'correct answer only' (cao), unless shown, for example, as A1 ft to indicate that previous wrong working is to be followed through. After a misread however, the subsequent A marks affected are treated as A ft, but manifestly absurd answers should never be awarded A marks.

www.dynamicpapers.com

5. For misreading which does not alter the character of a question or materially simplify it, deduct two from any A or B marks gained, in that part of the question affected. If you are using the annotation facility on ePEN, indicate this action by 'MR' in the body of the script.

6. If a candidate makes more than one attempt at any question:
   a) If all but one attempt is crossed out, mark the attempt which is NOT crossed out.
   b) If either all attempts are crossed out or none are crossed out, mark all the attempts and score the highest single attempt.

7. Ignore wrong working or incorrect statements following a correct answer.

www.dynamicpapers.com

General Principles for Pure Mathematics Marking

(NB specific mark schemes may sometimes override these general principles)

Method mark for solving 3 term quadratic:

1. Factorisation

   $(x^2 + bx + c) = (x + p)(x + q),\ \text{where} |pq| = |c|$ leading to x = …

   $(ax^2 + bx + c) = (mx + p)(nx + q),\ \text{where} |pq| = |c| \text{ and } |mn| = |a|$ leading to x = …

2. Formula

   Attempt to use correct formula (with values for a, b and c)

3. Completing the square

   Solving $x^2 + bx + c = 0$: $(x \pm \frac{b}{2})^2 \pm q \pm c, \quad q \neq 0$ leading to x = …

Method marks for differentiation and integration:

1. Differentiation

   Power of at least one term decreased by 1 ($x^n \rightarrow x^{n-1}$)

2. Integration

   Power of at least one term increased by 1 ($x^n \rightarrow x^{n+1}$)

Use of a formula

Where a method involves using a formula that has been learnt, the advice given in recent examiners' reports is that the formula should be quoted first.

Normal marking procedure is as follows:

Method mark for quoting a correct formula and attempting to use it, even if there are small mistakes in the substitution of values.

Where the formula is not quoted, the method mark can be gained by implication from correct working with values, but may be lost if there is any mistake in the working.

Exact answers

Examiners' reports have emphasised that where, for example, an exact answer is asked for, or working with surds is clearly required, marks will normally be lost if the candidate resorts to using rounded decimals.

Answers without working

The rubric says that these may not gain full credit. Individual mark schemes will give details of what happens in particular cases. General policy is that if it could be done "in your head", detailed working would not be required. Most candidates do show working, but there are occasional awkward cases and if the mark scheme does not cover this, please contact your team leader for advice.

www.dynamicpapers.com

www.dynamicpapers.com

Question Number	Scheme	Marks
1	$x^n \to x^{n+1}$ $\int\left(8x^3-6\sqrt{x}-\frac{2}{5x^3}\right)\mathrm{d}x = 2x^4-4x^{\frac{3}{2}}+\frac{1}{5x^2}+c$	M1 A1A1A1
		(4 marks)

M1 Increases the power by one on one of the terms in x

Must be for any one of $x^3 \to x^4$ $x^{\frac{1}{2}} \to x^{\frac{3}{2}}$ $x^{-3} \to x^{-2}$. Indices do not need to be processed for this mark. e.g. $x^3 \to x^{3+1}$ is fine.

A1 One term of $2x^4-4x^{\frac{3}{2}}+\frac{1}{5x^2}$ (may be unsimplified but indices must be processed)

A1 Any two terms of $2x^4-4x^{\frac{3}{2}}+\frac{1}{5x^2}$ (may be unsimplified but indices must be processed). Terms may appear as a list or be on different lines.

A1 $2x^4-4x^{\frac{3}{2}}+\frac{1}{5x^2}+c$ or simplified equivalent (including the constant of integration) all on one line.

e.g. accept $2x^4-4\left(\sqrt{x}\right)^3+0.2x^{-2}+c$ but do not accept $\frac{0.2}{x^2}$ or $\frac{\frac{1}{5}}{x^2}$ for $\frac{1}{5x^2}$

isw once a correct answer is seen but withhold if there is any spurious notation e.g. an integral sign or dx

www.dynamicpapers.com

Question Number	Scheme	Marks
2(a)	Gradient $= \dfrac{8-5}{7\sqrt{3}-\left(-2\sqrt{3}\right)}$ o.e.	M1
	e.g. $\Rightarrow \dfrac{3}{9\sqrt{3}} \times \dfrac{\sqrt{3}}{\sqrt{3}} = \dfrac{\sqrt{3}}{9}$	A1
		(2)
(b)	$\dfrac{1}{9}\sqrt{3} \rightarrow -\dfrac{9}{\sqrt{3}}$	B1ft
	$y-5 = "-\dfrac{9}{\sqrt{3}}"\left(x+2\sqrt{3}\right)$	M1
	$y = -3\sqrt{3}x - 13$	A1
		(3)
		(5 marks)

(a) Note $\dfrac{1}{9}\sqrt{3}$ with no working seen is M0A0

M1 Finds a correct expression for the gradient between *A* and *B* **which must not be of the form** $p\sqrt{3}$ where *p* is a rational constant e.g. $\dfrac{3}{9\sqrt{3}}$

We are not allowing sign slips when substituting in the coordinates for this mark. May subtract the other way round which is fine as long as it is consistent i.e. $\dfrac{5-8}{-2\sqrt{3}-7\sqrt{3}}$

Allow any version of the final answer which is not of the form $p\sqrt{3}$ where *p* is a rational constant to score.

May alternatively form two simultaneous equations ($5 = -2\sqrt{3}m + c$ and $8 = 7\sqrt{3}m + c$) and proceed to e.g. $\dfrac{8-5}{7\sqrt{3}-\left(-2\sqrt{3}\right)}$ or e.g. $\dfrac{3}{9\sqrt{3}}$ which must not be of the form $p\sqrt{3}$ where *p* is a rational constant.

Note working leading to e.g. $3 = m \times 9\sqrt{3} \Rightarrow m = \dfrac{\sqrt{3}}{9}$ is M0A0 (it is not of an allowable form before achieving the required answer)

A1 $p\sqrt{3}$ where *p* is a rational constant which does not have to be simplified e.g. $\dfrac{1}{9}\sqrt{3}$ or $\dfrac{\sqrt{3}}{9}$ or $\dfrac{3}{27}\sqrt{3}$ or $\dfrac{27}{243}\sqrt{3}$. It must come from a correct method and evidence of rationalising the denominator seen (they cannot just use their calculator)

Minimum working required e.g. $\dfrac{3}{9\sqrt{3}} \times \dfrac{\sqrt{3}}{\sqrt{3}} = \dfrac{\sqrt{3}}{9}$ or e.g. $\dfrac{3}{9\sqrt{3}} = \dfrac{3\sqrt{3}}{27}\left(= \dfrac{\sqrt{3}}{9}\right)$ is M1A1

Allow e.g. $\dfrac{3}{9\sqrt{3}} = \dfrac{1}{3\sqrt{3}} = \dfrac{\sqrt{3}}{9}$ to score M1A1 (cancelling first before rationalising)

www.dynamicpapers.com

(b) Full marks can be scored in this part even if insufficient working is shown in part (a) to find the correct gradient.

B1ft Correct perpendicular gradient to l_1 or follow through the negative reciprocal of their gradient from part (a), which may be an earlier form rather than their final answer.
May be implied by further work. Do not withhold this mark if they have a correct unsimplified expression for the perpendicular gradient, but make manipulation or transcription errors in further work.

M1 Attempts to find the equation of the perpendicular line through A using a changed gradient. Allow one sign slip on the coordinates. If they use $y = mx + c$ then they must proceed as far as $c = ...$ (you do not need to check the mechanics of the rearrangement of this)

A1 $y = -3\sqrt{3}x - 13$ o.e. e.g. $y = -\frac{9}{\sqrt{3}}x - 13$ isw once a correct equation of the required form is found.

www.dynamicpapers.com

Question Number	Scheme	Marks
3(a)	$58^2 = a + 5^3 \times b$, $65^2 = a + 10^3 \times b \Rightarrow a = ...,$ or $b = ...$	M1
	$a = 3241,\ b = 0.984$	A1A1
		(3)
(b)	e.g. $85^2 = "3241" + "0.984" \times T^3 \Rightarrow T = ...$	M1
	$(T =)$ awrt 15.9	A1
		(2)
		(5 marks)

If the equation is misread and used consistently throughout the question with either indices of 2 or 3 e.g. $P^3 = a + bt^2$ or e.g. $P^2 = a + bt^2$ then only allow the M marks to be scored. The equation must be seen.

Note candidates who work with 58000 and 65000 in (a) and 85000 in (b) can score maximum (a) M0A0A0 (b) M1A1 for 15.9

(a) Note that correct values for *a* and *b* scores full marks.

M1 Forms two simultaneous equations in *a* and *b* (at least one equation must be correct) and proceeds to find a value for *a* (must be positive) or a value for *b* (which may be directly from a calculator).
May see e.g. $3364 = a + 125b$ or e.g. $4225 = a + 1000b$
You do not need to check the mechanics of any rearrangement.

A1 One of $a = 3241,\ b = 0.984$ (or $\frac{123}{125}$) (may be embedded in the equation)

A1 $a = 3241,\ b = 0.984$ (or $\frac{123}{125}$) (may be embedded in the equation) isw once the correct values paired correctly with *a* and *b* are seen.

SC $b = 3241,\ a = 0.984$ (wrongly paired) score M1A1A0

(b) Note candidates who work with 58000 and 65000 in (a) and 85000 in (b) can score maximum (a) M0A0A0 (b) M1A1 for 15.9

Note awrt 15.9 with no working is M0A0

M1 Forms a correct equation for their *a* and their *b* and proceeds to find a value for *T*
Condone use of 3240 (3241 to 3sf)

If their *a* is 3 241 000 000 (or 3 240 000 000 to 3sf) and *b* is 984 000 condone miscopying/transcription errors provided the intention was clear to use these.

A1 awrt 15.9 following a correct equation seen. isw if they subsequently round to e.g. 16
Allow awrt 15.9 using 85000 if their *a* is 3 241 000 000 (or 3 240 000 000 to 3sf) and *b* is 984 000

www.dynamicpapers.com

Question Number	Scheme	Marks
4(i)(a)	ay^3	B1
		(1)
(i)(b)	$\dfrac{5}{\left(3a^{1-x}\right)^{-2}}=\dfrac{45}{\ldots}$	B1
	$\left(\ldots a^{1-x}\right)^{-2}=a^{-2}\times a^{2x}$	M1
	$=\dfrac{45a^2}{y^2}$	A1
		(3)
(ii)(a)	e.g. $3^{4t+2}=\left(3^{2t}\right)^2\times 9=9p^2$ (see notes)	M1
	$\Rightarrow 27\times p^2+3=82\times p\Rightarrow 27p^2-82p+3=0$ *	A1*
		(2)
(ii)(b)	Solves the quadratic $\Rightarrow$ 3, $\dfrac{1}{27}$	B1
	$\left(3^t\right)^2=3$ or $9^t=3\Rightarrow t=\dfrac{1}{2}$	M1
	or	
	$\left(3^t\right)^2=\dfrac{1}{27}\Rightarrow 3^t=\dfrac{1}{3\sqrt{3}}\Rightarrow t=-\dfrac{3}{2}$ or $9^t=\dfrac{1}{27}\Rightarrow t=-\dfrac{3}{2}$	
	$(t=)\ \dfrac{1}{2},\ -\dfrac{3}{2}$	A1
		(3)
		(9 marks)

Check answers by the questions but if there is a contradiction between by the question and the main body of the text then the main body of the text takes precedence

(i)

(a)

B1 ay^3 or y^3a Condone $a(y)^3$. Do not isw and do not accept e.g. $a\times y^3$ or e.g. a^1y^3

(b) **Note a correct answer with no working can score full marks in this part only**

B1 Correct coefficient of 45. Sight of 45 can imply this mark but do not allow e.g. -45, $\dfrac{1}{45}, \dfrac{45}{9}$

M1 Uses index laws to proceed from $\left(a^{1-x}\right)^{-2}\rightarrow$ e.g. $\left(\dfrac{a}{a^x}\right)^{\pm 2}$ or $\dfrac{a^2}{y^2}$ or $a^{-2}\div a^{-2x}$

If they write as a product then look for $\left(a^{1-x}\right)^{-2}\rightarrow$ e.g. $\left(a\times a^{-x}\right)^{\pm 2}$ or $a^2\times y^{-2}$ or $a^{-2}\times a^{2x}$ (i.e. the signs of the indices cannot be the same)

Do not be concerned with any coefficients which are not in the indices. e.g. $5a^2\div 3y^2$ is M1

Do not penalise if they make subsequent errors or they have multiple attempts. Score for sight of the expression. Do not be concerned as to whether it is on the numerator or denominator of the fraction.

A1 $\dfrac{45a^2}{y^2}$ or simplified equivalent including e.g. $\dfrac{45y^{-2}}{a^{-2}}$, $45a^2y^{-2}$ but not $45\left(\dfrac{a}{y}\right)^2$. isw once a correct answer is seen.

www.dynamicpapers.com

(ii) Mark (a) and (b) together

(a)

M1 Using the power law on 3^{4t+2}

It requires one of the following to be **seen** in their solution:

$3^{4t+2} \rightarrow \left[(3^2)^{2t} \text{ or } (3^{2t})^2 \text{ or } (9)^{2t} \text{ or } \left(9^t\right)^2 \right] \times \left[3^2 \text{ or } 9 \right]$ **or** $3^{4t+2} = 9^{2t+1}$

Do not accept e.g. $3^{4t+2} = 9p^2$ or e.g. $3^{4t} \times 9 = 9p^2$ as they do not explicitly show the power law being applied.

Do not accept 81^t and do not accept valid expressions appearing from incorrect stages of working e.g. $3^{4t+2} = 9^{2t+2} = 9^{2t} \times 9$ M0A0*

Note they may multiply out the brackets first leading to 3^{4t+3} so we would need to see

$3^{4t+3} \rightarrow \left[(3^2)^{2t} \text{ or } (3^{2t})^2 \text{ or } (9)^{2t} \text{ or } \left(9^t\right)^2 \right] \times \left[3^3 \text{ or } 27 \right]$ **or** $3^{4t+3} = 9^{2t+1.5}$

Do not be concerned with the rest of the equation for this mark.

If arithmetical slips result in not achieving one of the required forms above then M0A0*

A1* Proceeds to the given answer with no errors seen.

Their solution requires at least one intermediate stage of working which involves multiplying out the brackets (which may have been done earlier) before proceeding to the given answer.

e.g. $3\left(9 \times \left(3^{2t}\right)^2 + 1\right) = 82p \Rightarrow 27p^2 + 3 = 82p \Rightarrow$ given answer

If they attempt to work backwards then send to review.

(b) Condone poor labelling provided the intention is clear

B1 3 and $\frac{1}{27}$

M1 Attempts to find a value for t using one of their roots. May use logarithmic methods to solve to find a value e.g. $9^t = 3 \Rightarrow t = \log_9 3 = ...$ If using logarithms, the expression should be correct for their roots. May be implied by a correct value for t for one of their roots. You may need to check this.

A1 $\left(t =\right) \frac{1}{2}$ and $-\frac{3}{2}$ o.e. This mark can only be scored following **sight of correct roots** to the given quadratic in p

www.dynamicpapers.com

Question Number	Scheme	Marks
5(a)	$x^n \to x^{n-1}$	M1
	$\left(\frac{dy}{dx} =\right) 12x^2 - \frac{2}{x^2}$	A1
		(2)
(b)	$12x^2 - \frac{2}{x^2} = -5 \Rightarrow ... \Rightarrow 12x^4 + 5x^2 - 2 = 0$ *	M1A1*
		(2)
(c)	$12x^4 + 5x^2 - 2 = 0 \Rightarrow (4x^2 - 1)(3x^2 + 2) = 0 \Rightarrow x^2 = \frac{1}{4} \to x = \frac{1}{2} \quad (x > 0)$	M1
	$y = 4\left(\frac{1}{2}\right)^3 + \frac{2}{\left(\frac{1}{2}\right)} + 9 = ... \left(= \frac{27}{2} \right)$	M1
	$k = "\frac{27}{2}" + 5 \times "\frac{1}{2}" = ...$	dM1
	$k = 16$	A1
		(4)
		(8 marks)

(a)

M1 Decreases the power by one on at least one of the terms in x to achieve a term with a correct index. i.e. $x^3 \to x^2$ or $x^{-1} \to x^{-2}$. The indices do not need to be processed for this mark. e.g. $x^{-1} \to x^{-1-1}$

A1 $12x^2 - \frac{2}{x^2}$ or $12x^2 - 2x^{-2}$. Do not accept unsimplified equivalent expressions e.g. $12x^2 + -2x^{-2}$ isw if a correct answer is seen but they then attempt to e.g. divide by 2 afterwards

(b) Marks in (b) cannot be awarded for work done or seen in (c)

M1 Sets their $\frac{dy}{dx}$ of the form $ax^2 + \frac{b}{x^2}$ equal to -5 and attempts to rearrange to a 3-term quadratic in x^2 = 0. They must multiply through by x^2 and collect all 3 terms on one side of an equation (condone omission of = 0). It cannot be awarded for proceeding directly to the given answer in one step. (They may use an alternative letter so condone $y = x^2$ so they proceed to a 3-term quadratic in that variable instead)
Condone sign slips only for this mark.

A1* Achieves the given answer with no errors seen and at least one intermediate stage of working. Must see "= 0" on their final line. Condone if the order is different to the printed answer, provided all terms are on one side = 0

(c) Note that M0M1dM1A0 is possible. Work labelled as (b) must be used in (c) to score

M1 Solves the **given** quadratic in x^2 by factorising, completing the square or using the formula to find a positive value for x^2 and proceeds to find a positive value for x (usual rules apply).
They cannot just solve the quadratic in x^2 (or the quartic) directly using a calculator. If they just state the root(s) then it is M0

www.dynamicpapers.com

Note that $12x^4+5x^2-2=0 \Rightarrow \left(x^2+\frac{2}{3}\right)\left(x^2-\frac{1}{4}\right)=0 \Rightarrow x^2=...$ is M0 (the factorised version must match the quartic)

Condone poor labelling of x^2 as x if they then go on to square root

e.g. $12x^4+5x^2-2=0 \Rightarrow (3x+2)(4x-1)=0 \Rightarrow x=\frac{1}{4} \Rightarrow x=\frac{1}{2}$

Do not be concerned if they achieve other incorrect roots.

M1 Attempts to substitute their positive value of x (they must not be substituting in x^2) into the original equation to find a value for y. Condone miscopying and arithmetical slips provided the intention is clear. May be implied by a correct value for y but not if labelled as k
Whilst not dependent on the first M, it is dependent on an attempt to solve the given quartic (however poorly including via use of a calculator) and using their positive value of x (not x^2) from this. It cannot be for using their positive value of x from an incorrect quartic.
Ignore if they repeat this process for more than one x value, which may be negative.

dM1 Uses their pair of x and y to find a value for k. Condone slips. It is dependent on the previous method mark. Ignore if they repeat this process for more than one pair. May be implied by $k=16$ provided the correct root is found and the previous method mark has been scored.

A1 $k=16$ only (this can only be scored provided all method marks in this part have been awarded)

Alt(c) Using curve = tangent

M1: As above in main scheme and notes

M1: Sets $4x^3+\frac{2}{x}+9=k-5x$ and substitutes in their positive value of x. Condone slips if the attempt at the substitution is seen. (Must be seen or used in (c) to score or if there is a lack of labelling they must be attempting to find k not attempting to achieve the quartic in (b)). If the substitution is not explicitly seen then you will need to check this for their positive value of x.

dM1: Proceeds to find a value for k. You do not need to check the mechanics of the rearrangement as long as a value is achieved. It is dependent on the previous method mark. May be implied by $k=16$ provided the correct root is found and the previous method mark has been scored.

A1 $k=16$ only (this can only be scored provided all method marks have been awarded)

www.dynamicpapers.com

Question Number	Scheme	Marks
6(a)	$\frac{2(4)^2+a\times4+b}{4\sqrt{4}}=7\Rightarrow 32+4a+b=56\Rightarrow 4a+b=24$ *	M1A1*
		(2)
(b)	$4a+b=24,\ a+b=-9\Rightarrow a=11,\ b=-20$	M1A1
	$\frac{x^{\frac{3}{2}}}{2}+\frac{11x^{\frac{1}{2}}}{4}-5x^{-\frac{1}{2}}$	M1
	$\int \frac{x^{\frac{3}{2}}}{2}+\frac{11x^{\frac{1}{2}}}{4}-5x^{-\frac{1}{2}}\ \mathrm{d}x\Rightarrow$ Two of $\frac{x^{\frac{5}{2}}}{5}, \frac{"11"x^{\frac{3}{2}}}{6}, \frac{"-20"}{2}x^{\frac{1}{2}}$	dM1A1ft
	$\frac{(4)^{\frac{5}{2}}}{5}+\frac{11(4)^{\frac{3}{2}}}{6}-10(4)^{\frac{1}{2}}+c=-5\Rightarrow c=...$	M1
	$\left(\mathrm{f}(x)=\right)\frac{1}{5}x^{\frac{5}{2}}+\frac{11}{6}x^{\frac{3}{2}}-10x^{\frac{1}{2}}-\frac{91}{15}$	A1
		(7)
(c)	$(7,-5)$	B1
		(1)
		(10 marks)

Mark (a) and (b) together

(a)

M1 Attempts to substitute $x=4$ into $\mathrm{f}'(x)$ and sets equal to 7. Condone slips or incorrect manipulation prior to substituting in $x=4$ provided the intention is clear.

A1* Rearranges and achieves the given answer with no errors and at least one intermediate stage of working seen.

(b)

M1 Attempts to solve the two equations in *a* and *b* simultaneously to find a value for *a* or *b*. You do not need to be concerned with the mechanics of the rearrangement. Implied by any value for *a* or *b*

A1 $a=11,\ b=-20$ (correct values for *a* and *b* scores M1A1)

M1 Attempts to split the fraction and achieves at least one term with a correct index i.e. $x^{\frac{3}{2}}$, $x^{\frac{1}{2}}$ or $x^{-\frac{1}{2}}$ (for the relevant term). Do not allow for e.g. $\frac{...}{x^{\frac{1}{2}}}$ but the required index $x^{-\frac{1}{2}}$ may be implied by further work. You do not need to be concerned by the coefficient of the term, which may be in terms of *a* or *b*.

Do not allow to be scored for e.g. $\frac{2x^2}{4\sqrt{x}}\rightarrow ...x^{\frac{1}{2}}$

dM1 Increases the power by one on one of the terms in *x* with a correct index. It is dependent on the previous method mark. $x^{\frac{3}{2}}\rightarrow x^{\frac{5}{2}}$, $x^{\frac{1}{2}}\rightarrow x^{\frac{3}{2}}$ or $x^{-\frac{1}{2}}\rightarrow x^{\frac{1}{2}}$. The index does not need to be processed for this mark e.g. $x^{\frac{3}{2}}\rightarrow x^{\frac{3}{2}+1}$.

Do not award this mark for increasing the power by one on the denominator term.

www.dynamicpapers.com

If either *a* or *b* are not numerical then A0ftM0A0 is scored for the remaining marks in part (b)

Condone using numerical values for both *a* and *b* which appear with no evidence of working.

A1ft **Two correct terms of** $\frac{1}{5}x^{\frac{5}{2}}$ or $\frac{"11"}{6}x^{\frac{3}{2}}$ or $\frac{"-20"}{2}x^{\frac{1}{2}}$ The coefficients of the terms do not need to be simplified, but the index must be processed (follow through their *a* and/or *b* which must be numerical but both must have been found)

M1 Either states e.g. $x=4, y=-5$ and states a value for *c* or attempts to substitute $(4,-5)$ into their changed expression with a constant of integration and proceeds to find a value for *c*. They must have a constant of integration in their expression to score this mark.
You do not need to check the mechanics of their rearrangement.

A1 $\left(f(x)=\right)\frac{1}{5}x^{\frac{5}{2}}+\frac{11}{6}x^{\frac{3}{2}}-10x^{\frac{1}{2}}-\frac{91}{15}$ or exact simplified equivalent. isw once a correct answer is seen.
Must have the correct value for *c* substituted in.
Condone $-6.0\dot{6}$ for $-\frac{91}{15}$ but not e.g. -6.07 or $-6.066....$
Accept $\left(f(x)=\right)\frac{1}{30}\left(6x^{\frac{5}{2}}+55x^{\frac{3}{2}}-300x^{\frac{1}{2}}-182\right)$

(c) Check by the question or at the start of their work in the main body of the text

B1 $(7,-5)$ May be written as $x=7,\ \ y=-5$. Condone missing brackets.

www.dynamicpapers.com

Question Number	Scheme	Marks
7(a)	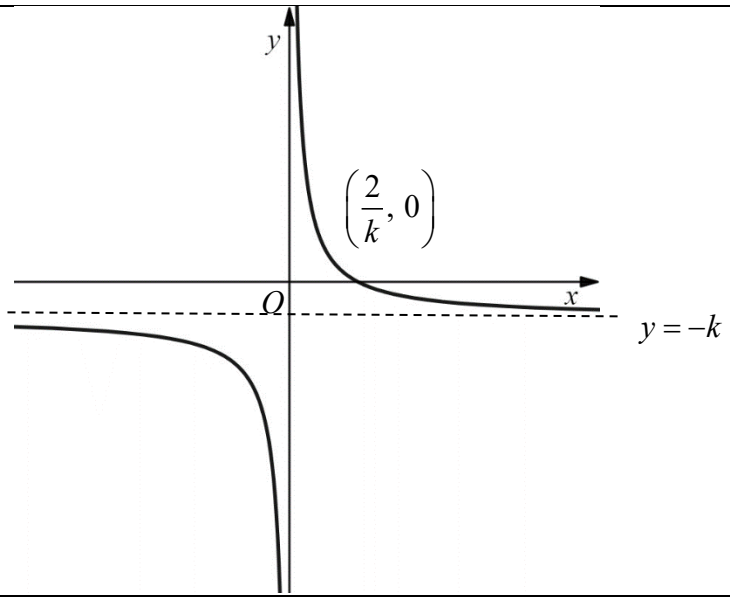	B1B1B1
		(3)
(b)	$-kx-6=\frac{2}{x}-k \Rightarrow -kx^2-6x=2-kx \Rightarrow kx^2+(6-k)x+2=0$ $(6-k)^2-4\times k\times 2 \Rightarrow k^2-20k+36$ $\Rightarrow \text{CVs}=2,18 \Rightarrow k<"2" \text{ or } k>"18"$ $(0<)k<2 \text{ or } k>18$	M1 dM1A1 M1 A1
		(5)
		(8 marks)

(a)

B1 Correct positive reciprocal shape graph in the correct position:

- The left branch must appear in quadrant 3 only
- The right branch must appear in both quadrants 1 and 4 only
- It must be drawn on a set of axes
- Condone slips provided a maximum or minimum is not intended

B1 Intersects the x-axis at $\left(\frac{2}{k}, 0\right)$ only. Condone $\left(0, \frac{2}{k}\right)$ provided it is marked in the correct place. May just see $\frac{2}{k}$ labelled which is acceptable. Do not be concerned by missing brackets.

B1 $y=-k$ Dashed lines are not needed on the sketch but if this asymptote is indicated on the sketch with dashed/solid lines then it must be a horizontal asymptote below the x-axis. Ignore any reference to a vertical asymptote. $y=-k$ must be labelled on the diagram (not just $-k$) or if labelled as $-k$ then $y=-k$ must be clearly identified as the asymptote in their working. Do not withhold this mark if they appear to have two horizontal asymptotes i.e. if the right branch is only in quadrant 1.

www.dynamicpapers.com

Examples

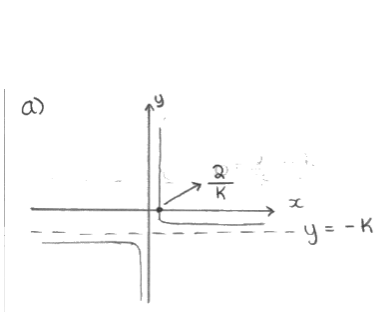

B1B1B1 (condone linearity)

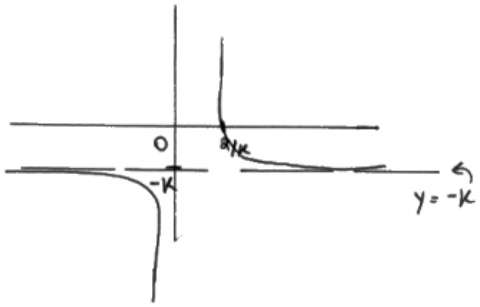

B1B1B1 (condone the right arm as long as not intending to curve back on itself/two vertical asymptotes not labelled)

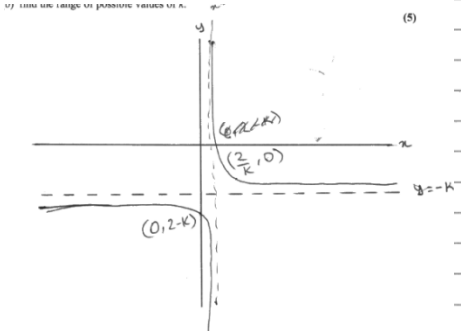

B0B1B1

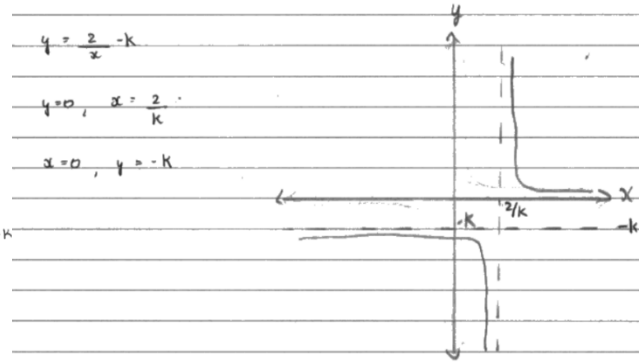

B0B0B0 ($-k$ marked is insufficient for third B1 and $y=-k$ is not clearly identified as an asymptote)

(b)

M1 Sets the equation of the curve equal to the equation of the line, multiplies both sides by x and collects terms on one side of the equation. They do not need to simplify to a 3 term quadratic in x for this mark but it requires an equation which would simplify to $...kx^2 \pm (...k \pm ...)x \pm ... = 0$ Condone slips and = 0 may be implied by attempting the discriminant.

dM1 Attempts the discriminant (ignore > < or = 0) for their 3TQ in x and rearranges to a 3TQ in k. Condone slips and do not be concerned by the mechanics of the rearrangement. It is dependent on the first method mark.

A1 $\pm\left(k^2 - 20k + 36\right)$ (ignore > < or = 0)

M1 Finds the critical values (which may be directly from a calculator) from their quadratic in k and attempts the outside regions (usual rules apply for solving a quadratic). May just appear as their final answer.
Do not be concerned with „ or … instead of < or >. If just the roots are stated for their quadratic with no method shown you may need to check this for their quadratic and look for both values to be correct to 2sf.
Condone e.g. "18" < k < "2" or e.g. $(-\infty, 2)$ $(18, \infty)$ to indicate the outside regions for this mark
May be in terms of x

A1 $(0<)k<2$ or $k>18$ **Must be in terms of *k***
Accept alternatives representing the same set of inequalities. e.g. $\{(0<)k<2 \cup k>18\}$ or $(0,2)$ $(18,\infty)$ "$k>18$, $k<2$" Ignore $k \neq 0$ if stated. $18<k<2$ is A0
Withhold this mark for use of AND o.e. (i.e. $\cap$) or if they have inequalities which would include 2 and/or 18.
If a lower limit is given then it must be $k>0$ e.g. 0 „ $k<2$, $k>18$ is A0.

www.dynamicpapers.com

Question Number	Scheme	Marks
8(a)	$\dfrac{\sin OAB}{3.4}=\dfrac{\sin\left(\frac{\pi}{6}\right)}{1.9}\Rightarrow OAB=2.034$	M1A1A1
		(3)
(b)	Area $=\dfrac{1}{2}\times 3.4\times 1.9\times\sin\left(\pi-\dfrac{\pi}{6}-"2.034"\right)=$ awrt 1.78 (cm^2)	M1A1
		(2)
(c)	Area of sector $OBC="1.78"\times\dfrac{3}{2}$ $(="2.67")$	M1
	$\dfrac{1}{2}\times 3.4^2\times\theta="\dfrac{1.78\times 3}{2}"$	M1
	$\theta=$ awrt 0.462 *	A1*
		(3)
(d)	$OA=\sqrt{3.4^2+1.9^2-2\times 3.4\times 1.9\times\cos\left(\pi-\dfrac{\pi}{6}-"2.034"\right)}$	M1
	$OA=$ awrt 2.1 (cm)	A1
	Length of arc $BC=0.462\times 3.4$ $(=1.57...)$	B1
	Perimeter $=3.4+1.9+"2.1"+0.462\times 3.4$	dM1
	$=$ awrt 9 (cm)	A1
		(5)
		(13 marks)

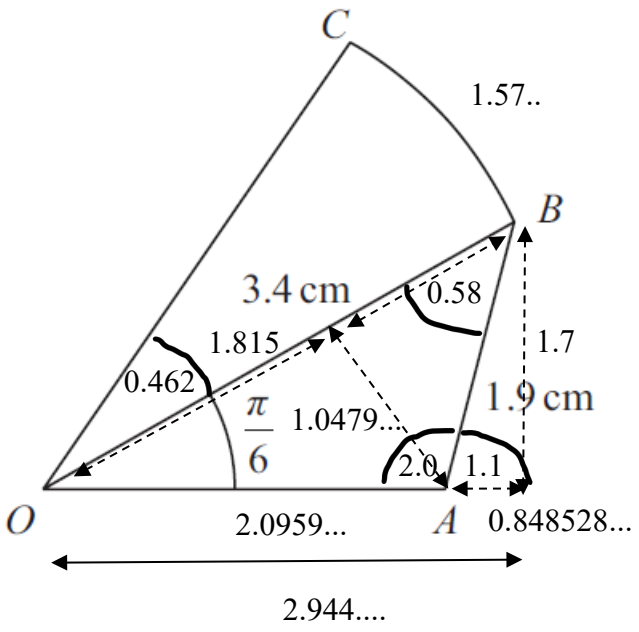

Note that in all parts they may work in degrees and convert back where appropriate which is acceptable. If they do not then the method marks are still available. We do not need to see the conversion, but in calculations they cannot have a mix of radians and degrees in the same expression/equation

www.dynamicpapers.com

(a) Note the correct angle of awrt 2.034 scores full marks

M1 Correct equation using the sine rule with the sides and angles in the correct places.

A1 awrt 1.11 (principal angle may be implied by final answer)

A1 awrt 2.034 (calc 2.033751055)

Alt(a) – Using the cosine rule twice – must be seen in (a) to score

M1 Correct equation using the cosine rule with the sides and angles in the correct places i.e.

$1.9^2 = 3.4^2 + OA^2 - 2\times 3.4\times OA\times \cos\left(\frac{\pi}{6}\right)$ o.e.

A1 $OA =$ awrt 2.1

A1 awrt 2.034

(b) Note that those who find and use *OAB* as "1.108" instead of 2.034 can score max M1A0

M1 Correct expression to find the area of the triangle using their angle *OAB*.

Do not be concerned by the size (or sign) of the angle found by attempting $\pi - \frac{\pi}{6} -$ their *OAB*. Do look out for alternative ways of finding the area of the triangle.

Use the diagram on the previous page to help you. Condone slips in the rearrangement of any expressions provided they were seen to be correct initially.

A1 awrt 1.78 (condone lack of units). (calc 1.781564499)

(c) Note that those who find and use *OAB* as "1.108" instead of 2.034 can score max M1M1A0

M1 Attempts to find the area of the sector using the given ratio by dividing their area of the triangle from (b) by 2 and multiplying by 3. May be implied by their area of the sector – you may need to check this on your calculator.

M1 Sets $\frac{1}{2}\times 3.4^2\times\theta =$ their area for the sector (or rearranged equivalent)

Condone equating to incorrect areas, provided it is not their area of triangle *OAB*, which may have been found from an incorrect method or may appear with little or no working.

A1* Achieves the given answer (in radians) with no errors seen following a correct equation

i.e. $\frac{1}{2}\times 3.4^2\times\theta =$ awrt 2.6 or awrt $2.7 \Rightarrow \theta =$ awrt 0.462

Condone premature earlier rounding provided the method is sound and they achieve awrt 0.462 or state 0.462 following a correct method. (calc 0.4623437281)

(d) Note that those who find and use *OAB* as "1.108" instead of 2.034 to find length *OA* can score max M1A0B1dM0A0

M1 Attempts to find the length *OA*. There are various methods so score for the overall method condoning slips. Use the diagram on the previous page to help you. The expression for *OA* is sufficient. May be implied by awrt 2.1. If found in an earlier part it must be used in (d) to score. **Condone use of their angle *OAB* even if it is not obtuse for this mark.**

A1 awrt 2.1 (or may be implied by later work/the final answer) (calc 2.095958235)

B1 Correct expression or value for the length of the arc *BC*.
Allow to be implied by sight of 1.462×3.4 (if they have combined *OC* and arc *BC*)

dM1 A correct method to find the total perimeter. It is dependent on the previous M and B marks.
Condone slips, but the overall method/strategy must be correct. The expression is sufficient.
If their angle *OAB* is acute instead of obtuse and used to find *OA* (or other lengths) then this mark cannot be scored. (Note it is possible to find *OA* using the cosine rule and not use their answer to part (a))

A1 awrt 9 (cm) following a correct method

www.dynamicpapers.com

Question Number	Scheme	Marks
9(a)	$b=-1$	B1
	$\frac{9}{4}-(x-3)^2$	M1A1
		(3)
(b)	$\left(3, \frac{9}{4}\right)$	B1ftB1ft
		(2)
(c)(i)	$x=\frac{9}{2}$	B1
(ii)	$k=\frac{\pi}{3}$	B1
(iii)	6	B1
		(3)
(d)	$m=\frac{0-"\frac{9}{4}"}{"\frac{9}{2}"-"3"}=-\frac{3}{2}$	M1
	$y-0="-\frac{3}{2}"\left(x-"\frac{9}{2}"\right)$ or $y-"\frac{9}{4}"="-\frac{3}{2}"(x-"3")$	dM1
	$y=-\frac{3}{2}\left(x-\frac{9}{2}\right)$ or $y-\frac{9}{4}=-\frac{3}{2}(x-3)$ o.e.	A1
	$y>\cos\left(\frac{1}{3}\pi x\right),\ y<6x-\frac{27}{4}-x^2,\ y<-\frac{3}{2}x+\frac{27}{4}$	B1ftB1
		(5)
		(13 marks)

(a) **Note you may see values stated and an expression. The expression takes precedence.**

B1 $b=-1$ which may be embedded in their completed square form

M1 $...(x\pm 3)^2$ or may state $c=\pm 3$

A1 $\frac{9}{4}-(x-3)^2$ or $-(x-3)^2+\frac{9}{4}$ or equivalent in the required form e.g. $-1(x-3)^2+2.25$ (must see the expression – cannot just state values for *a*, *b* and *c*). isw once a correct expression where *a*, *b* and *c* are single values within the expression are seen

(b) **May be seen on the diagram. If there is a contradiction then the main body of the work takes precedence.**
Note their *a* and *c* in part (a) must be single values to follow through in part (b)
Correct coordinates can be found in (b) and score B1ftB1ft without using their part (a)

B1ft One correct coordinate or follow through their part (a). Allow to be written as e.g. $x=3$ or $y=\frac{9}{4}$ o.e.

B1ft $\left(3, \frac{9}{4}\right)$ o.e. or follow through their part (a) $(-c, a)$. Allow to be written as e.g. $x=3$ and $y=2.25$

(c)

www.dynamicpapers.com

(i)

B1 $\frac{9}{2}$ o.e. or condone $\left(\frac{9}{2}, 0\right)$ Ignore labelling but if the x coordinate of A is found as well then they must clearly identify $\frac{9}{2}$ as their final answer. Do not allow $\left(0, \frac{9}{2}\right)$

(ii)

B1 $\frac{\pi}{3}$ (must be exact)

(iii)

B1 6

(d)

M1 Attempts to find the gradient of l using their coordinates for P and B from (b) and (c).
The unsimplified expression is sufficient but do not allow sign slips.
May alternatively form two simultaneous equations and proceed to an equation in m. May use another letter. The equation in m (or a different variable for m) must be correct for their values, or implied by a correct value for m for their P and B. If only a value for m is seen you may need to check this is correct.

dM1 Attempts the equation of the straight line for l using their coordinates for P or B.
It is dependent on the previous method mark. The expression is sufficient. Condone one sign slip on substituting in their pair of coordinates. They do not need to rearrange to a particular form, but if they use $y = mx + c$ they must proceed as far as $c = ...$
If using simultaneous equations it requires reaching values for both m and c (or other letters)

A1 Correct equation of l in any form

B1ft Any two correct inequalities in terms of y. (Do not accept in terms of e.g. R or e.g. C_1, l) following through if required on:

- their k in $\cos(kx)$
- and/or part (a) if they have used the completed square form of the quadratic.
- and/or their straight-line equation for l

Also allow if in terms of k. Condone inconsistent use of $<$ $>$ /„ … for this mark.
May see e.g. $\cos\left(\frac{1}{3}\pi x\right) < y < -\frac{3}{2}x + 6.75$ which counts as two of the inequalities. One end may be incorrect but allow the other end to still score for this mark if it would be correct as a single inequality.

B1 **All three correct inequalities in terms of y.(Do not accept in terms of e.g. R or e.g. C_1, l)**
Must consistently use $<$ $>$ or „ … for this mark
May see e.g. $\cos\left(\frac{1}{3}\pi x\right) < y < -\frac{3}{2}x + 6.75$ which counts as two of the inequalities.
They must have substituted in the correct value for k so this mark cannot be scored following an incorrect value for k in (c)(ii) unless they restart.

If their part (a) answer is incorrect, they can still score full marks provided they use the given quadratic expression and not their incorrect completed square form.

Do not be concerned by any notation used to join the three inequalities or reference to AND/OR.

May see an inequality in x. These can be ignored provided this range $1.5 < x < 4.5$ is included i.e. we would ignore $x < 5$ but not $x < 3$

www.dynamicpapers.com

Pearson Education Limited. Registered company number 872828
with its registered office at 80 Strand, London, WC2R 0RL, United Kingdom