www.dynamicpapers.com

Please check the examination details below before entering your candidate information

Candidate surname	Other names

Centre Number | Candidate Number

Pearson Edexcel International GCSE

Monday 10 June 2024

Morning (Time: 2 hours 30 minutes)

Paper reference **4MB1/02R**

Mathematics B

PAPER 2R



You must have: Ruler graduated in centimetres and millimetres, protractor, pair of compasses, pen, HB pencil, eraser, calculator. Tracing paper may be used.

Total Marks

Instructions

- Use **black** ink or ball-point pen.
- **Fill in the boxes** at the top of this page with your name, centre number and candidate number.
- Answer **all** questions.
- Answer the questions in the spaces provided – *there may be more space than you need.*
- **Calculators may be used.**

Information

- The total mark for this paper is 100.
- The marks for **each** question are shown in brackets – *use this as a guide as to how much time to spend on each question.*

Advice

- Read each question carefully before you start to answer it.
- Check your answers if you have time at the end.
- Without sufficient working, correct answers may be awarded no marks.

Turn over ▶

P73497A

©2024 Pearson Education Ltd.

F:1/1/1/1/1/1/1/1/1/

P 7 3 4 9 7 A 0 1 3 2

Pearson

www.dynamicpapers.com

Answer all TWELVE questions.

Write your answers in the spaces provided.

You must write down all the stages in your working.

1 Gary buys furniture and sells it in a shop.

In the shop on Monday, Gary has tables and chairs such that

number of tables : number of chairs = 2 : 7

Gary has 42 chairs in the shop on Monday.

(a) Calculate the number of tables Gary has in the shop on Monday.

(2)

Gary buys a table for $240 and sells it for $276

(b) Calculate the percentage profit from the sale of the table.

(2)

Gary buys some chairs and sells them for $513
Gary's percentage profit from the sale of the chairs is 35%

(c) Calculate the price at which Gary bought the chairs.

(2)

The cost of a table that Gary buys is $732
An identical table costs 684 euros in France.

Using the exchange rate $1 = 0.95 euros

(d) find the difference in the costs of the tables.
State whether your answer is in euros or $.

(3)

DO NOT WRITE IN THIS AREA
DO NOT WRITE IN THIS AREA
DO NOT WRITE IN THIS AREA

www.dynamicpapers.com

DO NOT WRITE IN THIS AREA

DO NOT WRITE IN THIS AREA

DO NOT WRITE IN THIS AREA

Question 1 continued

(Total for Question 1 is 9 marks)

www.dynamicpapers.com

2

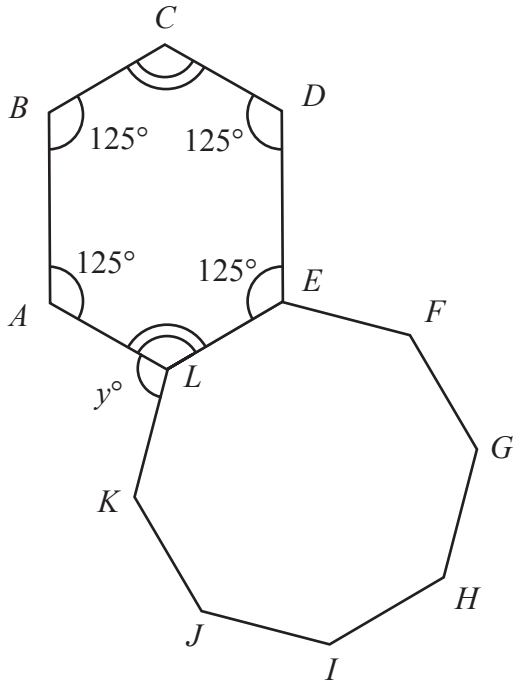

Diagram **NOT** accurately drawn

Figure 1

Figure 1 shows a hexagon *ABCDEL* and a regular octagon *EFGHIJKL*

$\angle BAL = \angle ABC = \angle CDE = \angle DEL = 125°$

$\angle BCD = \angle ALE$ $\angle ALK = y°$

(a) Calculate the value of y

(5)

A different regular polygon has T sides and is such that

an interior angle $= (10x + 25)°$ an exterior angle $= (7x - 83)°$

(b) Calculate the value of T

(4)

[Sum of interior angles of polygon $= (2n - 4)$ right angles]

DO NOT WRITE IN THIS AREA
DO NOT WRITE IN THIS AREA
DO NOT WRITE IN THIS AREA

www.dynamicpapers.com

DO NOT WRITE IN THIS AREA
DO NOT WRITE IN THIS AREA
DO NOT WRITE IN THIS AREA

Question 2 continued

(Total for Question 2 is 9 marks)

www.dynamicpapers.com

3 Triangle A and triangle B are drawn on the grid opposite.

(a) Describe fully the single transformation that maps triangle A onto triangle B

(3)

Triangle A is transformed to triangle C by a reflection in the line with equation $y = -1$

(b) On the grid, draw and label triangle C

(2)

Triangle A is transformed to triangle D by an enlargement with centre (0, 3) and scale factor 2

(c) On the grid, draw and label triangle D

(2)

Triangle A is transformed to triangle E under the transformation with matrix $\mathbf{M}$ where

$$\mathbf{M} = \begin{pmatrix} -2 & 1 \\ 0 & -2 \end{pmatrix}$$

(d) On the grid, draw and label triangle E

(3)

DO NOT WRITE IN THIS AREA
DO NOT WRITE IN THIS AREA
DO NOT WRITE IN THIS AREA

www.dynamicpapers.com

DO NOT WRITE IN THIS AREA
DO NOT WRITE IN THIS AREA
DO NOT WRITE IN THIS AREA

Question 3 continued

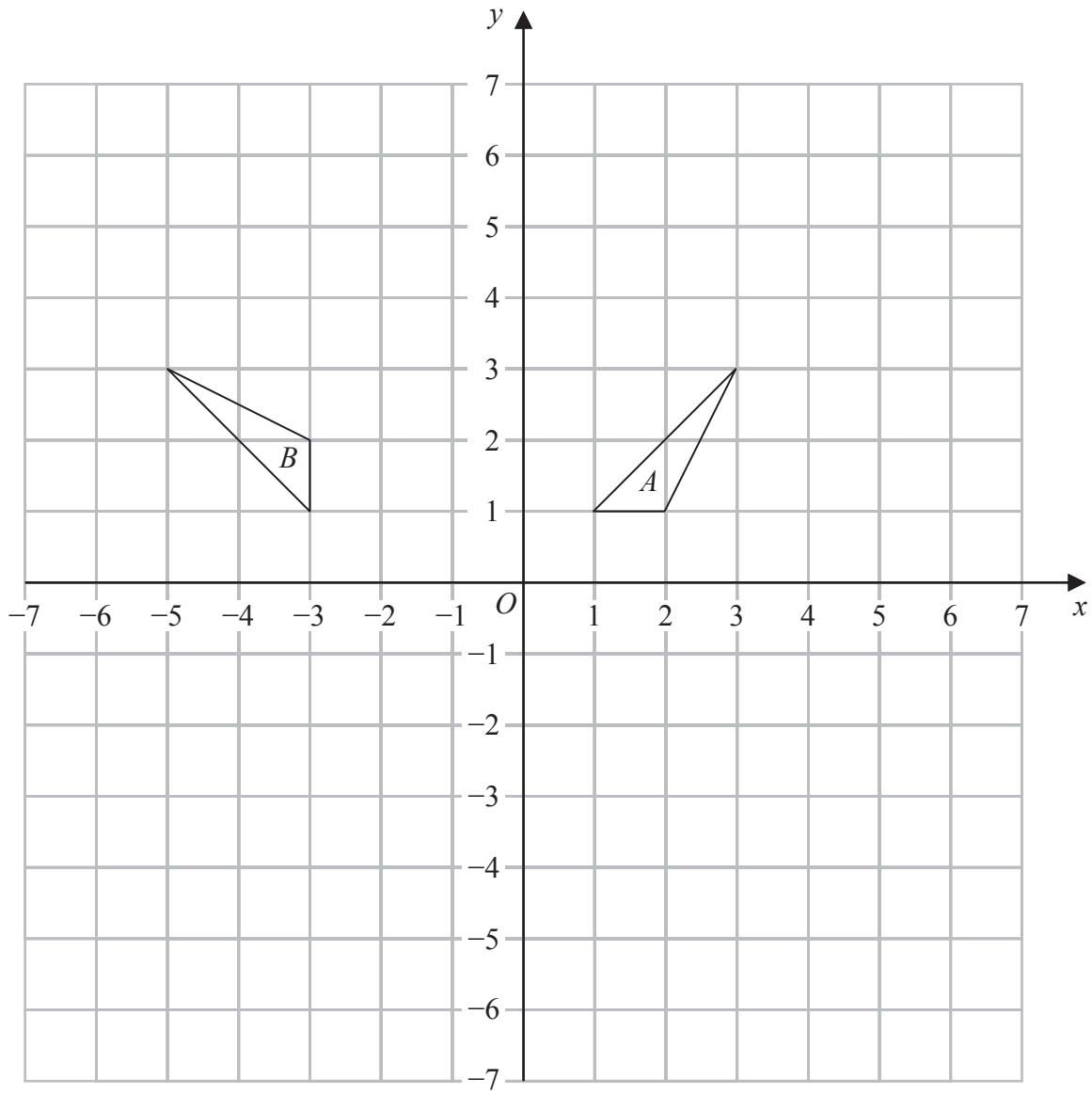

Turn over for a spare grid if you need to redraw your triangles.

www.dynamicpapers.com

Question 3 continued

DO NOT WRITE IN THIS AREA
DO NOT WRITE IN THIS AREA
DO NOT WRITE IN THIS AREA

www.dynamicpapers.com

DO NOT WRITE IN THIS AREA
DO NOT WRITE IN THIS AREA
DO NOT WRITE IN THIS AREA

Question 3 continued

Only use this grid if you need to redraw your triangles.

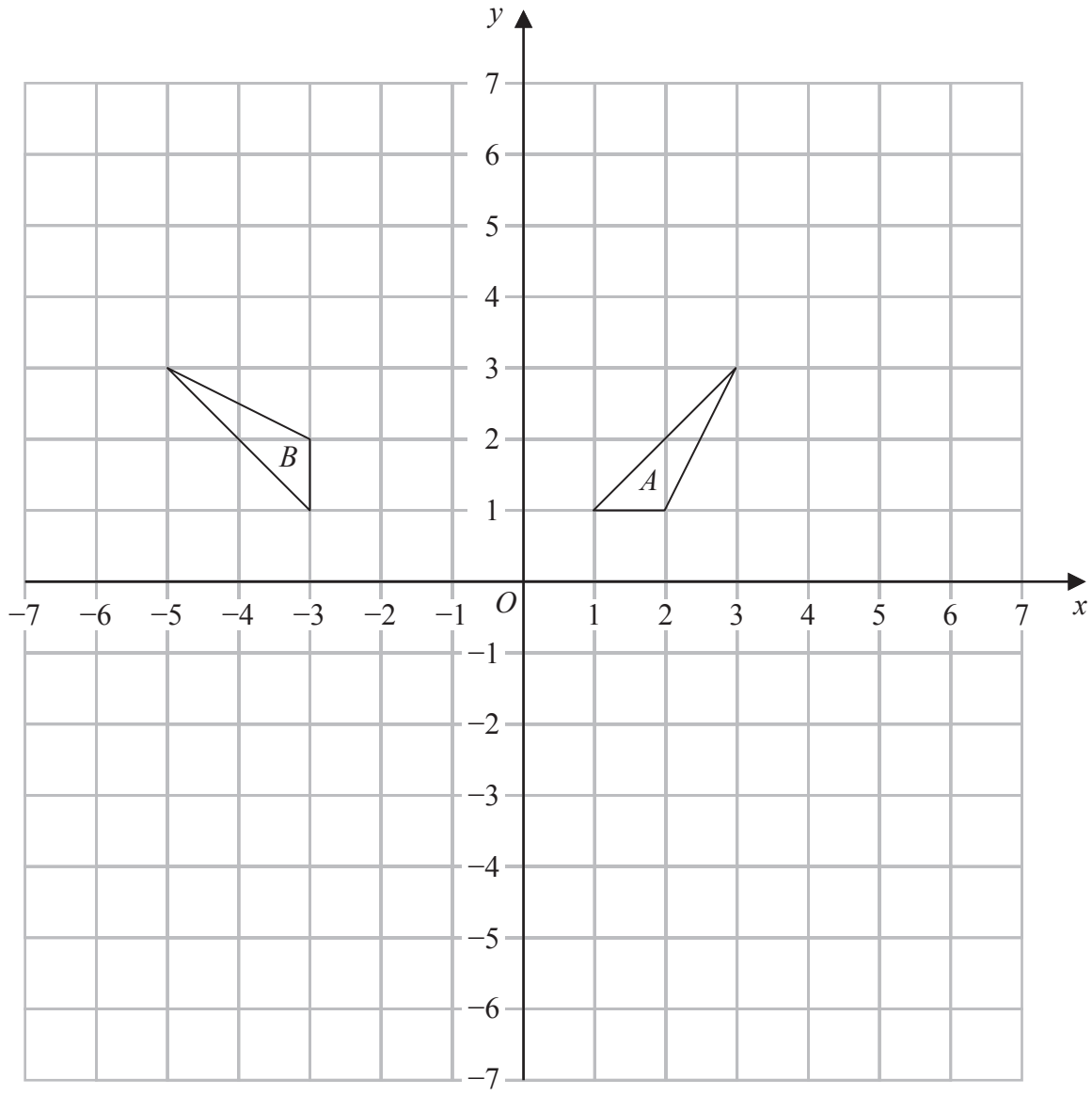

(Total for Question 3 is 10 marks)

www.dynamicpapers.com

4 (a) Solve the inequality $4x + 3 \leqslant 31$

(2)

(b) Solve the inequality $1 < 2x + 3 < 21$

(2)

(c) Hence represent on the number line opposite, the set of values of x for which

$$4x + 3 \leqslant 31 \quad \text{and} \quad 1 < 2x + 3 < 21$$

(2)

DO NOT WRITE IN THIS AREA
DO NOT WRITE IN THIS AREA
DO NOT WRITE IN THIS AREA

www.dynamicpapers.com

DO NOT WRITE IN THIS AREA
DO NOT WRITE IN THIS AREA
DO NOT WRITE IN THIS AREA

Question 4 continued

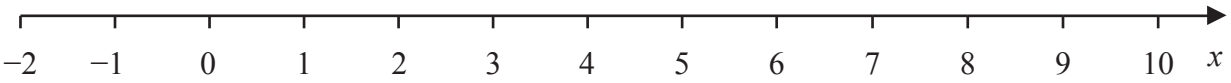

(Total for Question 4 is 6 marks)

www.dynamicpapers.com

5 (a) Complete the table of values for $y = 2x^3 - 5x + 3$

x	−2	−1.5	−1	−0.5	0	0.5	1	1.5	2
y		3.75	6	5.25	3	0.75		2.25	

(2)

(b) On the grid opposite, plot the points from your completed table and join them to form a smooth curve.

(2)

(c) By drawing a suitable straight line on your grid, find estimates to one decimal place, for the solutions of the equation $2x^3 - 5x + 3 = 2$ in the range $-2 \leqslant x \leqslant 2$

(2)

DO NOT WRITE IN THIS AREA
DO NOT WRITE IN THIS AREA
DO NOT WRITE IN THIS AREA

www.dynamicpapers.com

DO NOT WRITE IN THIS AREA
DO NOT WRITE IN THIS AREA
DO NOT WRITE IN THIS AREA

Question 5 continued

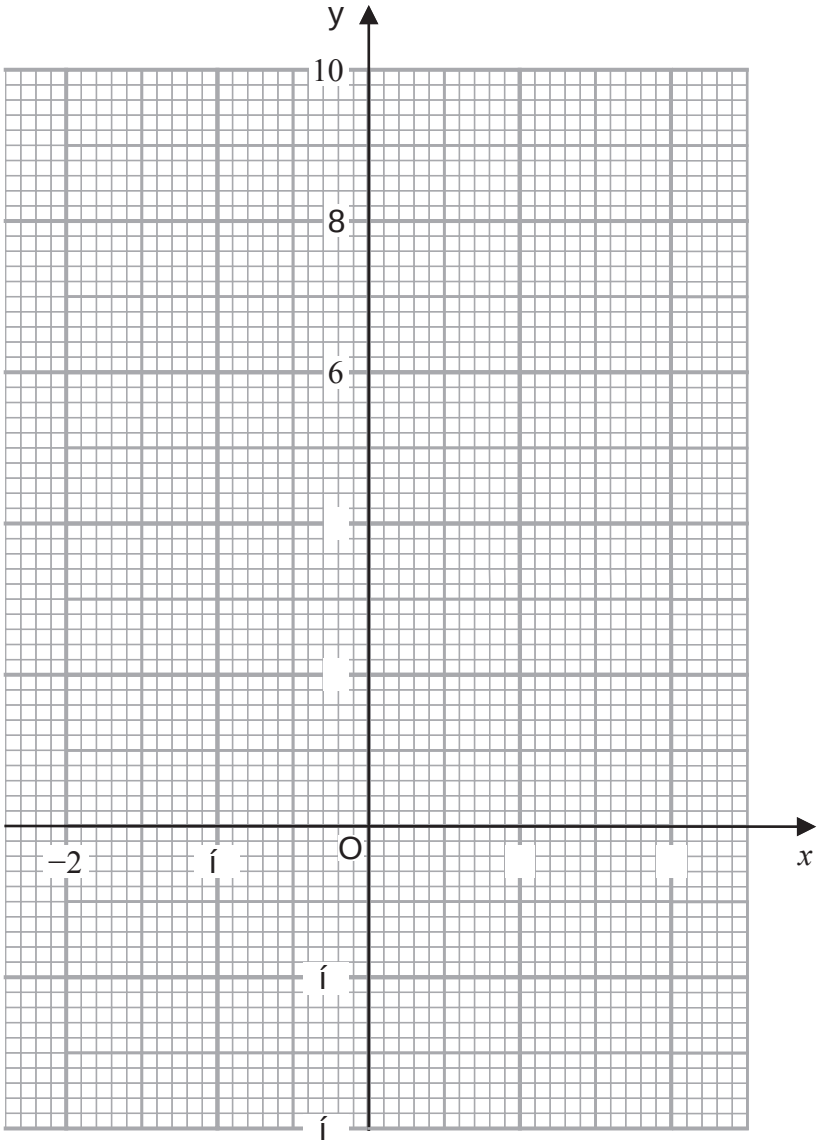

(Total for Question 5 is 6 marks)

www.dynamicpapers.com

6 80 gardeners were asked if they grow potatoes (P), carrots (C) or lettuce (L)

Of these gardeners

9 grow potatoes, carrots and lettuce
17 grow potatoes and carrots
23 grow carrots and lettuce
19 grow potatoes and lettuce
48 grow carrots
49 grow lettuce
2 grow none of these three crops

(a) Using this information, complete the Venn diagram below to show the number of gardeners in each subset.

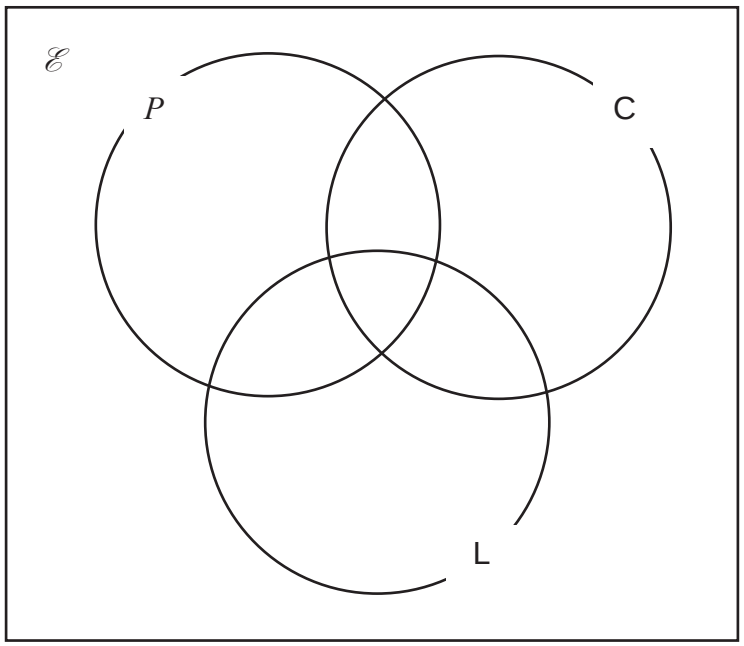

(3)

(b) Find $n(C \cap L')$

(1)

One of the gardeners is chosen at random.

Given that this gardener grows carrots,

(c) find the probability that this gardener also grows lettuce.

(2)

DO NOT WRITE IN THIS AREA
DO NOT WRITE IN THIS AREA
DO NOT WRITE IN THIS AREA

www.dynamicpapers.com

DO NOT WRITE IN THIS AREA

DO NOT WRITE IN THIS AREA

DO NOT WRITE IN THIS AREA

Question 6 continued

(Total for Question 6 is 6 marks)

www.dynamicpapers.com

7 $\mathbf{A} = \begin{pmatrix} 10 & -6 \\ -8 & 5 \end{pmatrix}$ $\mathbf{B} = \begin{pmatrix} -15 & 10 \\ 14 & -5 \end{pmatrix}$ $\mathbf{C} = \begin{pmatrix} 1 & -3 & 1 \\ 2 & -4 & -2 \end{pmatrix}$

(a) Find $4\mathbf{A} + 2\mathbf{B}$

(2)

(b) Find $\mathbf{AC}$

(3)

(c) Find the matrix $\mathbf{D}$ such that $\mathbf{A}^{-1} + \mathbf{D} = 2\mathbf{I}$ where $\mathbf{I} = \begin{pmatrix} 1 & 0 \\ 0 & 1 \end{pmatrix}$

(4)

$$\left[\text{The inverse of matrix } \begin{pmatrix} a & b \\ c & d \end{pmatrix} \text{ is } \frac{1}{ad - bc} \begin{pmatrix} d & -b \\ -c & a \end{pmatrix} \right]$$

DO NOT WRITE IN THIS AREA
DO NOT WRITE IN THIS AREA
DO NOT WRITE IN THIS AREA

www.dynamicpapers.com

DO NOT WRITE IN THIS AREA

DO NOT WRITE IN THIS AREA

DO NOT WRITE IN THIS AREA

Question 7 continued

(Total for Question 7 is 9 marks)

www.dynamicpapers.com

8 Aalia delivers letters and parcels.

(a) Last week Aalia worked for 5 days and wrote down 5 integers that represent the distance, in miles, she drove each day.

For these integers

the mode is 15
the median is 16
the largest − the smallest = 7

Find 5 integers that Aalia could have written down.

(3)

(b) Aalia has 8 letters to deliver to Tom.
The mean weight of the 8 letters is 104 grams.

5 of the letters are each of weight 89 grams.

The mean weight of the remaining letters is A grams.

Work out the value of A

(3)

The histogram shows information about the weights of all the parcels Aalia has in her delivery van on Friday.

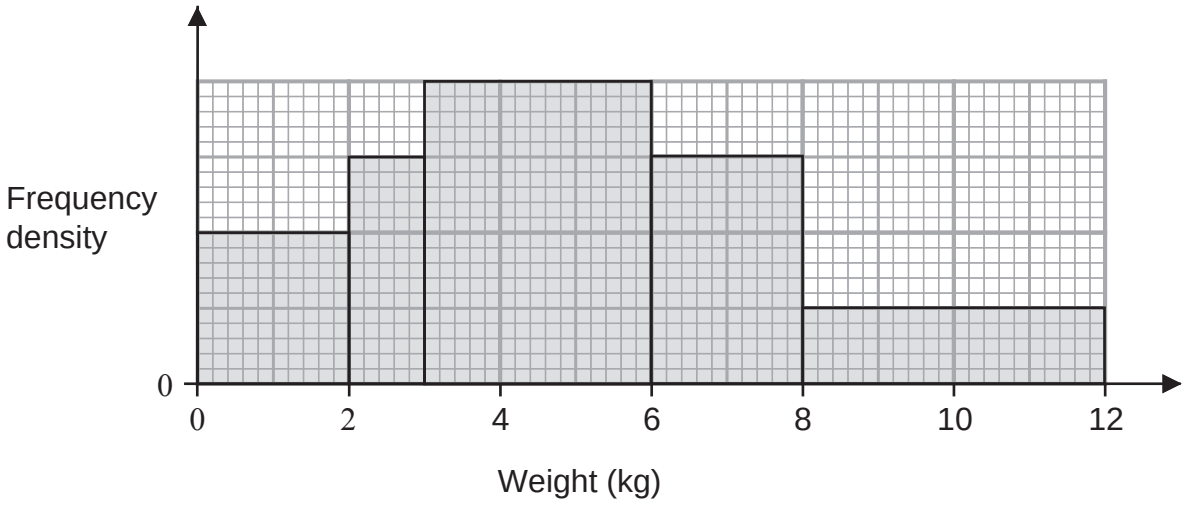

75 of the parcels in the van each have a weight between 2 kg and 6 kg.

Aalia takes 2 parcels at random from the van.

(c) Find an estimate for the probability that both parcels weigh more than 4 kg.

(5)

DO NOT WRITE IN THIS AREA
DO NOT WRITE IN THIS AREA
DO NOT WRITE IN THIS AREA

www.dynamicpapers.com

DO NOT WRITE IN THIS AREA
DO NOT WRITE IN THIS AREA
DO NOT WRITE IN THIS AREA

Question 8 continued

www.dynamicpapers.com

Question 8 continued

DO NOT WRITE IN THIS AREA
DO NOT WRITE IN THIS AREA
DO NOT WRITE IN THIS AREA

www.dynamicpapers.com

DO NOT WRITE IN THIS AREA
DO NOT WRITE IN THIS AREA
DO NOT WRITE IN THIS AREA

Question 8 continued

(Total for Question 8 is 11 marks)

www.dynamicpapers.com

9

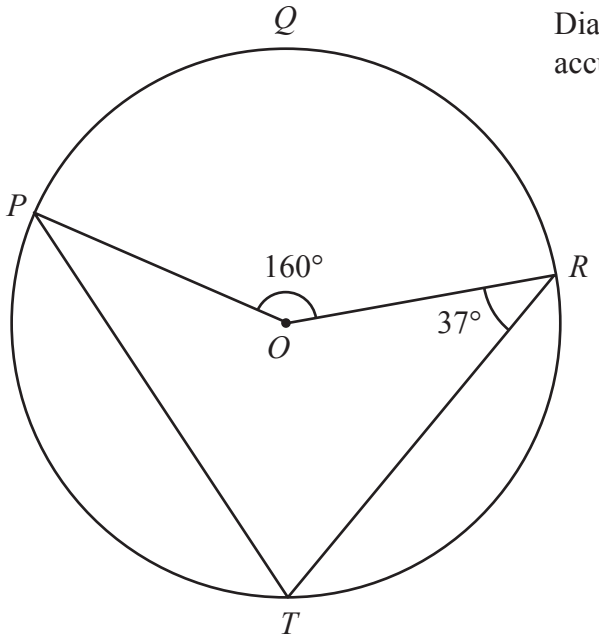

Diagram **NOT** accurately drawn

Figure 2

Figure 2 shows the points P, Q, R and T on a circle centre O

$\angle POR = 160°$ $\angle ORT = 37°$

(a) (i) Work out the size, in degrees, of $\angle PTR$

(1)

(ii) Give a reason for your answer.

(1)

(b) Work out the size, in degrees, of $\angle TPO$

(2)

DO NOT WRITE IN THIS AREA
DO NOT WRITE IN THIS AREA
DO NOT WRITE IN THIS AREA

www.dynamicpapers.com

DO NOT WRITE IN THIS AREA
DO NOT WRITE IN THIS AREA
DO NOT WRITE IN THIS AREA

Question 9 continued

The sector, *OPQR*, is cut out from the circle in Figure 2

A hollow right circular cone is formed by joining *OP* and *OR* together as shown in Figure 3

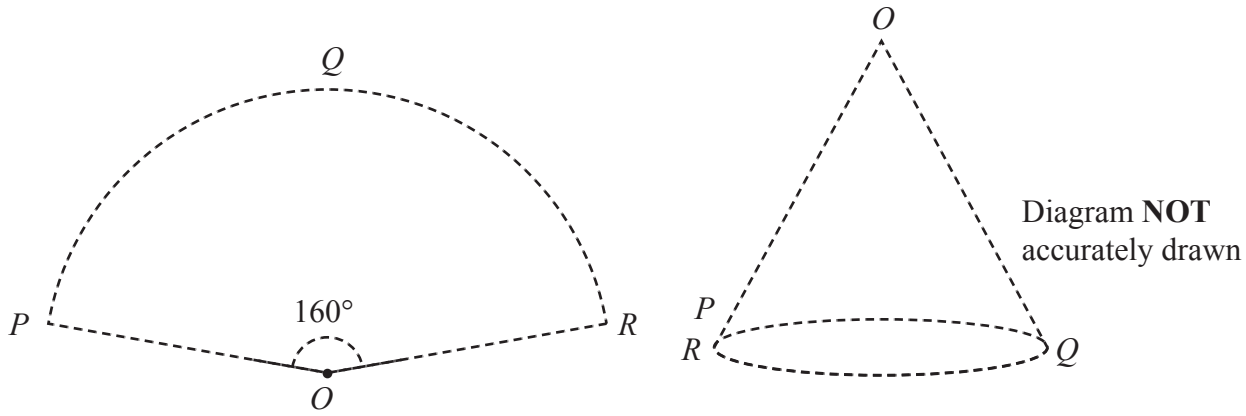

Figure 3

The curved surface area of the cone is $\frac{196}{25}\pi$ cm²

(c) Calculate the volume, in cm³ to 3 significant figures, of the cone.

(6)

$$\left(\begin{array}{l}\text{Volume of cone} = \frac{1}{3}\pi r^2 h \\ \text{Curved surface area of cone} = \pi r l\end{array}\right)$$

www.dynamicpapers.com

Question 9 continued

DO NOT WRITE IN THIS AREA
DO NOT WRITE IN THIS AREA
DO NOT WRITE IN THIS AREA

www.dynamicpapers.com

DO NOT WRITE IN THIS AREA

DO NOT WRITE IN THIS AREA

DO NOT WRITE IN THIS AREA

Question 9 continued

(Total for Question 9 is 10 marks)

www.dynamicpapers.com

10 f and g are two functions such that

$$f : x \mapsto x^2 + 2x \quad \text{where } x > -1$$

$$g : x \mapsto \frac{13}{x+2}$$

(a) State the value of x that must be excluded from any domain of g

(1)

(b) Find f(3)

(1)

(c) Find the value of x for which $g(x) = 5$

(2)

(d) Find fg(24)

(2)

(e) Find the value of x for which $gf(x) = 4$
Show your working clearly.

(4)

The function h is such that $h : x \mapsto 5x^2 - 10x - 4 \quad \text{where } x \geqslant 1$

(f) Find the inverse of h(x) in the form $h^{-1} : x \mapsto ...$

(4)

DO NOT WRITE IN THIS AREA
DO NOT WRITE IN THIS AREA
DO NOT WRITE IN THIS AREA

[The solutions of $ax^2 + bx + c = 0$ where $a \neq 0$ are given by $x = \frac{-b \pm \sqrt{b^2 - 4ac}}{2a}$]

www.dynamicpapers.com

DO NOT WRITE IN THIS AREA
DO NOT WRITE IN THIS AREA
DO NOT WRITE IN THIS AREA

Question 10 continued

www.dynamicpapers.com

Question 10 continued

DO NOT WRITE IN THIS AREA
DO NOT WRITE IN THIS AREA
DO NOT WRITE IN THIS AREA

www.dynamicpapers.com

DO NOT WRITE IN THIS AREA

DO NOT WRITE IN THIS AREA

DO NOT WRITE IN THIS AREA

Question 10 continued

(Total for Question 10 is 14 marks)

www.dynamicpapers.com

11 Solve the simultaneous equations

$$x - y = 5$$
$$2x^2 + y^2 + 2xy = 85$$

Show clear algebraic working.

(6)

DO NOT WRITE IN THIS AREA
DO NOT WRITE IN THIS AREA
DO NOT WRITE IN THIS AREA

[The solutions of $ax^2 + bx + c = 0$ where $a \neq 0$ are given by $x = \dfrac{-b \pm \sqrt{b^2 - 4ac}}{2a}$]

www.dynamicpapers.com

DO NOT WRITE IN THIS AREA

DO NOT WRITE IN THIS AREA

DO NOT WRITE IN THIS AREA

Question 11 continued

(Total for Question 11 is 6 marks)

Turn over for Question 12

www.dynamicpapers.com

12 $\dfrac{35\times\left(\sqrt[3]{25}\right)^{6(2a-3)}}{7\times 25^{2a+1}} = 5^{w}$

Find an expression for w in terms of a
Give your answer in the form $na + m$ where n and m are integers.

(4)

(Total for Question 12 is 4 marks)

TOTAL FOR PAPER IS 100 MARKS

DO NOT WRITE IN THIS AREA
DO NOT WRITE IN THIS AREA
DO NOT WRITE IN THIS AREA