www.dynamicpapers.com

Please check the examination details below before entering your candidate information

Candidate surname	Other names

Centre Number | Candidate Number

Pearson Edexcel International GCSE (9–1)

Friday 10 November 2023

Morning (Time: 1 hour 45 minutes)

Paper reference **4HB1/02**

Human Biology

UNIT: 4HB1
PAPER: 02

You must have:
Calculator, ruler

Total Marks

Instructions

- Use **black** ink or ball-point pen.
- **Fill in the boxes** at the top of this page with your name, centre number and candidate number.
- Answer **all** questions.
- Answer the questions in the spaces provided
  – *there may be more space than you need.*
- Show all the steps in any calculations and state the units.

Information

- The total mark for this paper is 90.
- The marks for **each** question are shown in brackets
  – *use this as a guide as to how much time to spend on each question.*

Advice

- Read each question carefully before you start to answer it.
- Try to answer every question.
- Check your answers if you have time at the end.

Turn over ▶

P74494A

©2023 Pearson Education Ltd.
Z:1/1/1/1/1/

P 7 4 4 9 4 A 0 1 2 0

Pearson

www.dynamicpapers.com

Answer ALL questions.

1 (a) The box lists parts of the eye and parts of the ear.

auditory nerve ciliary body cochlea cornea eardrum optic nerve ossicles pupil retina semicircular canals

The table has descriptions of parts of the eye and ear.

Complete the table by matching the descriptions, using parts from the box.

(7)

Description	Part
contains light sensitive cells	
vibrates when receives sound waves	
helps the body balance	
controls the amount of light entering the eye	
transfers vibrations across the middle ear	
turns vibrations into nerve impulses	
refracts light entering the eye	

DO NOT WRITE IN THIS AREA
DO NOT WRITE IN THIS AREA
DO NOT WRITE IN THIS AREA

www.dynamicpapers.com

(b) Explain why a person using both eyes finds it easier to catch a ball than a person who is blind in one eye.

(3)

.....

.....

.....

.....

.....

.....

(Total for Question 1 = 10 marks)

DO NOT WRITE IN THIS AREA
DO NOT WRITE IN THIS AREA
DO NOT WRITE IN THIS AREA

www.dynamicpapers.com

2 (a) Draw a labelled diagram of a cheek cell from inside a mouth as seen under a light microscope.

(4)

(b) (i) Explain what is meant by the term **tissue**.

(3)

(ii) State the type of tissue that contains cheek cells.

(1)

(iii) Name two other types of tissue.

(2)

1 .....

2 .....

(Total for Question 2 = 10 marks)

DO NOT WRITE IN THIS AREA
DO NOT WRITE IN THIS AREA
DO NOT WRITE IN THIS AREA

www.dynamicpapers.com

DO NOT WRITE IN THIS AREA
DO NOT WRITE IN THIS AREA
DO NOT WRITE IN THIS AREA

3 A vaccine is used to protect people against a disease.

The graph shows the level of antibodies in the blood of a child given the vaccine.

Three doses of the vaccine were given and then a booster dose was given.

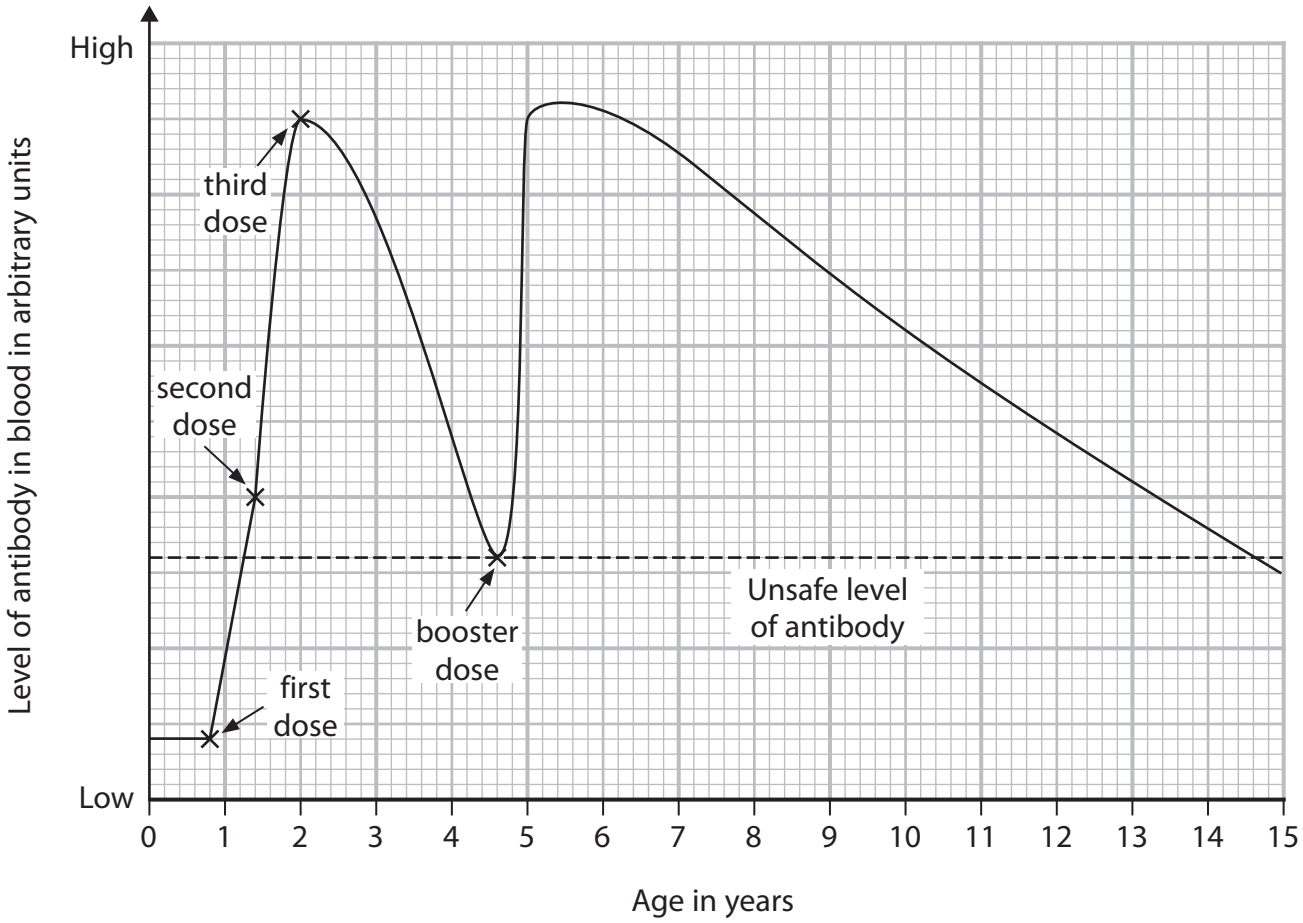

(a) State the general name given to disease causing organisms.

(1)

.....

(b) (i) Determine the time, in years, between the first dose and the third dose of the vaccine.

(1)

time = ... years

(ii) State the type of immunity that vaccination produces.

(2)

.....

.....

www.dynamicpapers.com

(iii) Name two components that could be in a vaccine that would help to trigger immunity.

(2)

1 .....

2 .....

(c) There are some antibodies in the blood of the child before the first vaccination is given.

Explain why there are antibodies in the blood before vaccination.

(2)

.....

.....

.....

.....

(d) Explain why a booster dose is necessary.

(5)

.....

.....

.....

.....

.....

.....

.....

.....

.....

.....

DO NOT WRITE IN THIS AREA
DO NOT WRITE IN THIS AREA
DO NOT WRITE IN THIS AREA

www.dynamicpapers.com

(e) Give two differences between the effects of the first three doses and the effect of the booster dose.

(2)

1 .....

.....

2 .....

.....

(Total for Question 3 = 15 marks)

DO NOT WRITE IN THIS AREA
DO NOT WRITE IN THIS AREA
DO NOT WRITE IN THIS AREA

www.dynamicpapers.com

4 Read the passage below. Use the information in the passage and your own knowledge to answer the questions that follow.

Atorvastatin belongs to a group of medicines known as statins. Statins are medicines that regulate lipid levels in the blood. Statins are used when changes of diet and lifestyle have failed to lower blood cholesterol levels.

Statins can also be used to reduce the risk of heart disease when cholesterol levels are normal. People with liver disease or kidney problems should avoid taking statins. Women who are pregnant or are breastfeeding should also avoid taking statins.

In the United Kingdom approximately 7.5 million people take statins. This is 12% of the total population. However, up to 20% of these people stop taking statins because of adverse side effects such as muscle aches, fatigue, feeling sick and joint pains.

A recent study looked at patients who had stopped taking statins because of side effect symptoms. Patients were asked to take statins for four months, then placebo tablets (tablets that look like statins but contain no active substances) for four months followed by no tablets for four months. Every day the patients were asked how bad their symptoms were using a score from 0 to 100. The table shows the results.

Four-month treatment	Mean score out of 100
statins	16.3
placebo	15.4
no tablets	8.0

(a) Describe the changes in diet and lifestyle that could lower cholesterol. (Lines 2 and 3)

(2)

.....

.....

.....

.....

DO NOT WRITE IN THIS AREA
DO NOT WRITE IN THIS AREA
DO NOT WRITE IN THIS AREA

www.dynamicpapers.com

DO NOT WRITE IN THIS AREA
DO NOT WRITE IN THIS AREA
DO NOT WRITE IN THIS AREA

(b) (i) Explain why people with liver disease or kidney problems should avoid taking statins. (Lines 5 and 6)

(4)

(ii) Explain why women who are pregnant or breastfeeding should avoid taking statins. (Lines 6 and 7)

(3)

(c) (i) Using the results of the study, calculate how many times greater the score for symptoms when taking statins is compared with the score when not taking tablets.

(1)

times greater = ...

www.dynamicpapers.com

(ii) Discuss the results of the study using information from the table.

(4)

(Total for Question 4 = 14 marks)

DO NOT WRITE IN THIS AREA
DO NOT WRITE IN THIS AREA
DO NOT WRITE IN THIS AREA

www.dynamicpapers.com

DO NOT WRITE IN THIS AREA
DO NOT WRITE IN THIS AREA
DO NOT WRITE IN THIS AREA

BLANK PAGE

www.dynamicpapers.com

5 Sickle cell anaemia is a condition caused by a recessive allele.

(a) Explain what is meant by the term **recessive allele**.

(2)

(b) The diagram shows a family pedigree. Some family members have sickle cell anaemia.

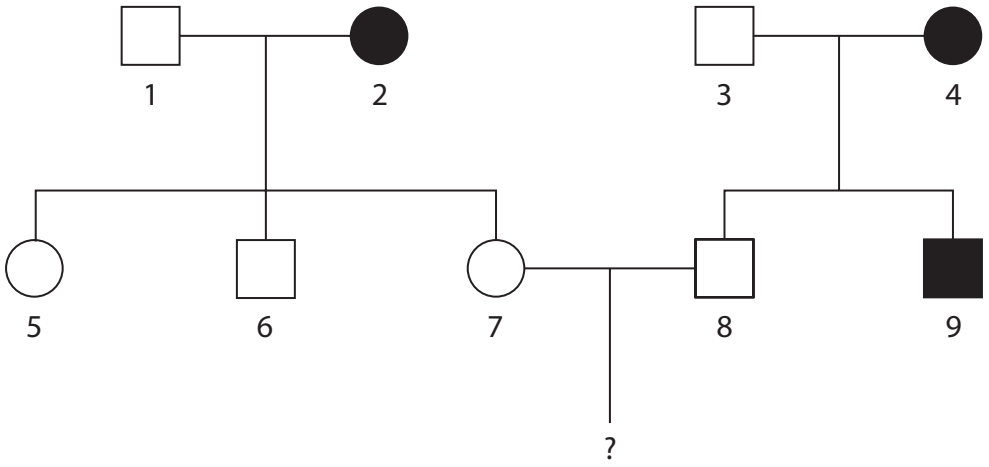

Key

- Male with sickle cell anaemia
- Male without sickle cell anaemia
- Female with sickle cell anaemia
- Female without sickle cell anaemia

(i) Give two people who are homozygous recessive.

(2)

(ii) Give the genotype of person 6.

Use the symbol **A** for the non-sickle cell allele and the symbol **a** for the sickle cell allele.

(1)

DO NOT WRITE IN THIS AREA
DO NOT WRITE IN THIS AREA
DO NOT WRITE IN THIS AREA

www.dynamicpapers.com

DO NOT WRITE IN THIS AREA
DO NOT WRITE IN THIS AREA
DO NOT WRITE IN THIS AREA

(c) (i) People 7 and 8 in the pedigree produce a child.

Draw a genetic diagram to show the possible genotypes and phenotypes of this child.

(4)

(ii) Calculate the probability that this child will be a boy with sickle cell anaemia.

(4)

probability = ...

(Total for Question 5 = 13 marks)

www.dynamicpapers.com

6 The diagram shows a human sperm.

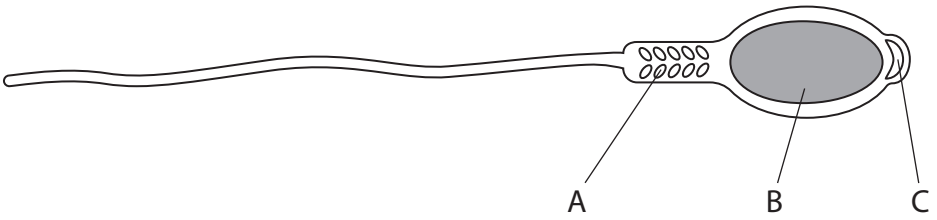

(a) (i) Name the parts A, B and C.

(3)

A .....

B .....

C .....

(ii) Describe the function of part C.

(3)

.....

.....

.....

.....

.....

.....

(iii) The actual length of the sperm is 50.0 micrometres (μm).

Calculate the magnification of the diagram.

[1 mm = 1000 μm]

(4)

magnification = ...

DO NOT WRITE IN THIS AREA
DO NOT WRITE IN THIS AREA
DO NOT WRITE IN THIS AREA

www.dynamicpapers.com

(b) Describe the function of the structure labelled A in the process of fertilisation.

(3)

.....

.....

.....

.....

.....

.....

(Total for Question 6 = 13 marks)

DO NOT WRITE IN THIS AREA
DO NOT WRITE IN THIS AREA
DO NOT WRITE IN THIS AREA

www.dynamicpapers.com

7 A student investigates the digestion of olive oil (lipid) using the enzyme lipase, bile salts and a blue indicator.

The indicator changes from blue to yellow when the pH is below 5.

This is the student's method.

- mix together olive oil, lipase solution, bile salts and one drop of indicator
- put this mixture into a test tube
- repeat the process for six other test tubes
- keep the tubes at different temperatures
- keep another test tube (test tube 8) containing just olive oil, indicator and lipase at 40 °C
- record the colours of the mixture of each tube every hour for 25 hours

The chart shows the student's results.

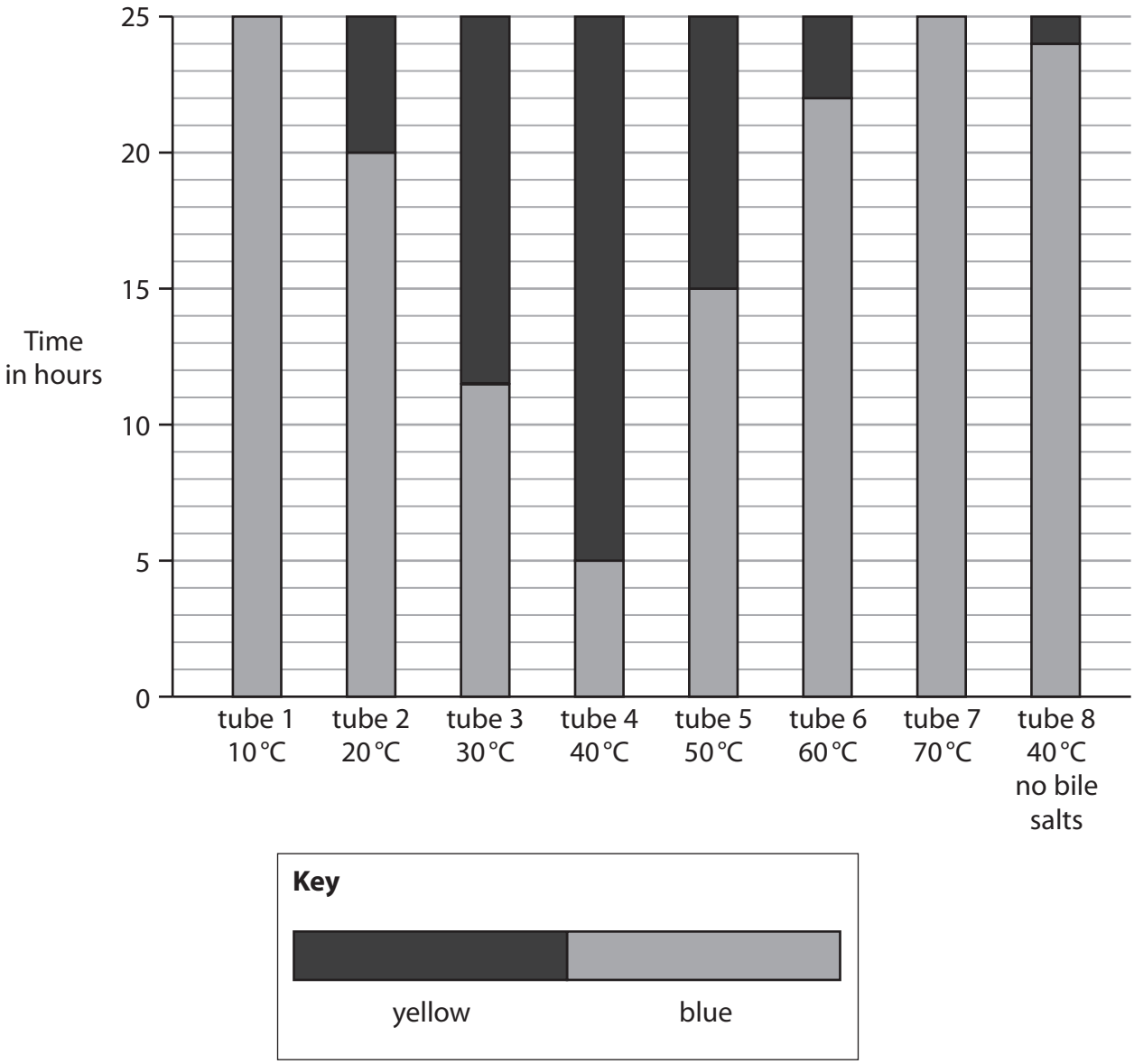

DO NOT WRITE IN THIS AREA
DO NOT WRITE IN THIS AREA
DO NOT WRITE IN THIS AREA

www.dynamicpapers.com

(a) (i) State three factors that should be kept constant in the student's investigation.

(3)

1 .....

2 .....

3 .....

(ii) State the optimum temperature for the action of lipase.

(1)

.....

(iii) Discuss why this temperature is only an approximate optimum temperature.

(3)

.....

.....

.....

.....

.....

.....

(b) (i) Determine how much more time the indicator takes to change colour in tube 8 than in tube 3.

(2)

time = ... hours

(ii) Explain why the pH decreases during the 25 hours.

(3)

.....

.....

.....

.....

.....

.....

DO NOT WRITE IN THIS AREA
DO NOT WRITE IN THIS AREA
DO NOT WRITE IN THIS AREA

www.dynamicpapers.com

(c) Explain the result for tube 8.

(3)

.....

.....

.....

.....

.....

.....

(Total for Question 7 = 15 marks)

TOTAL FOR PAPER = 90 MARKS

DO NOT WRITE IN THIS AREA
DO NOT WRITE IN THIS AREA
DO NOT WRITE IN THIS AREA

www.dynamicpapers.com

DO NOT WRITE IN THIS AREA
DO NOT WRITE IN THIS AREA
DO NOT WRITE IN THIS AREA

BLANK PAGE

www.dynamicpapers.com

DO NOT WRITE IN THIS AREA

DO NOT WRITE IN THIS AREA

DO NOT WRITE IN THIS AREA

BLANK PAGE