www.dynamicpapers.com

Please check the examination details below before entering your candidate infor on

Candidate surname	Other names

Centre Number | Candidate Number

Pearson Edexcel International GCSE (9–1)

Thursday 25 May 2023

Morning (Time: 2 hours)

Paper reference **4PH1/1P 4SD0/1P**

Physics

UNIT: 4PH1
Science (Double Award) 4SD0
PAPER: 1P

You must have:
Ruler, calculator, Equation Booklet (enclosed)

Total Marks

Instructions

- Use **black** ink or ball-point pen.
- If pencil is used for diagrams/sketches/graphs it must be dark (HB or B).
- **Fill in the boxes** at the top of this page with your name, centre number and candidate number.
- Answer **all** questions.
- Answer the questions in the spaces provided – *there may be more space than you need.*
- Show all the steps in any calculations and state the units.

Information

- The total mark for this paper is 110.
- The marks for **each** question are shown in brackets – *use this as a guide as to how much time to spend on each question.*

Advice

- Read each question carefully before you start to answer it.
- Write your answers neatly and in good English.
- Try to answer every question.
- Check your answers if you have time at the end.

Turn over ▶

P71955A

©2023 Pearson Education Ltd.
N:1/1/1/1/1/

P 7 1 9 5 5 A 0 1 3 2

Pearson

www.dynamicpapers.com

FORMULAE

You may find the following formulae useful.

energy transferred = current × voltage × time $\qquad E = I \times V \times t$

$$\text{frequency} = \frac{1}{\text{time period}} \qquad f = \frac{1}{T}$$

$$\text{power} = \frac{\text{work done}}{\text{time taken}} \qquad P = \frac{W}{t}$$

$$\text{power} = \frac{\text{energy transferred}}{\text{time taken}} \qquad P = \frac{W}{t}$$

$$\text{orbital speed} = \frac{2\pi \times \text{orbital radius}}{\text{time period}} \qquad v = \frac{2 \times \pi \times r}{T}$$

(final speed)^2 = (initial speed)^2 + (2 × acceleration × distance moved)

$$v^2 = u^2 + (2 \times a \times s)$$

pressure × volume = constant $\qquad p_1 \times V_1 = p_2 \times V_2$

$$\frac{\text{pressure}}{\text{temperature}} = \text{constant} \qquad \frac{p_1}{T_1} = \frac{p_2}{T_2}$$

Where necessary, assume the acceleration of free fall, $g = 10\ \text{m/s}^2$.

DO NOT WRITE IN THIS AREA
DO NOT WRITE IN THIS AREA
DO NOT WRITE IN THIS AREA

www.dynamicpapers.com

DO NOT WRITE IN THIS AREA
DO NOT WRITE IN THIS AREA
DO NOT WRITE IN THIS AREA

BLANK PAGE

www.dynamicpapers.com

Answer ALL questions.

Some questions must be answered with a cross in a box ☒. If you change your mind t an answer, put a line through the box ☒ and then mark your new answer with a cross ◺

1 This is a question about radioactivity.

(a) Which of these is the unit of activity?

(1)

☒ **A** becquerel

☒ **B** kilogram

☒ **C** newton

☒ **D** pascal

(b) Which of these is the correct description of the term **half-life**?

(1)

☒ **A** time taken for the activity of a substance to halve

☒ **B** half of the time taken for the mass of a substance to decay

☒ **C** time taken for the activity to decay completely

☒ **D** time taken for the mass of a substance to decay twice

(c) A teacher demonstrates how the activity of a radioactive sample changes with time.

(i) The box gives the names of different pieces of equipment.

ruler	stopwatch	balance	newton meter
protractor	GM tube	voltmeter	ammeter

Complete the sentences using words from the box.

(2)

The teacher measures time with a ..... .

The teacher measures the count rate with a ..... and a counter.

DO NOT WRITE IN THIS AREA
DO NOT WRITE IN THIS AREA
DO NOT WRITE IN THIS AREA

www.dynamicpapers.com

DO NOT WRITE IN THIS AREA
DO NOT WRITE IN THIS AREA
DO NOT WRITE IN THIS AREA

(ii) The graph shows the teacher's results.

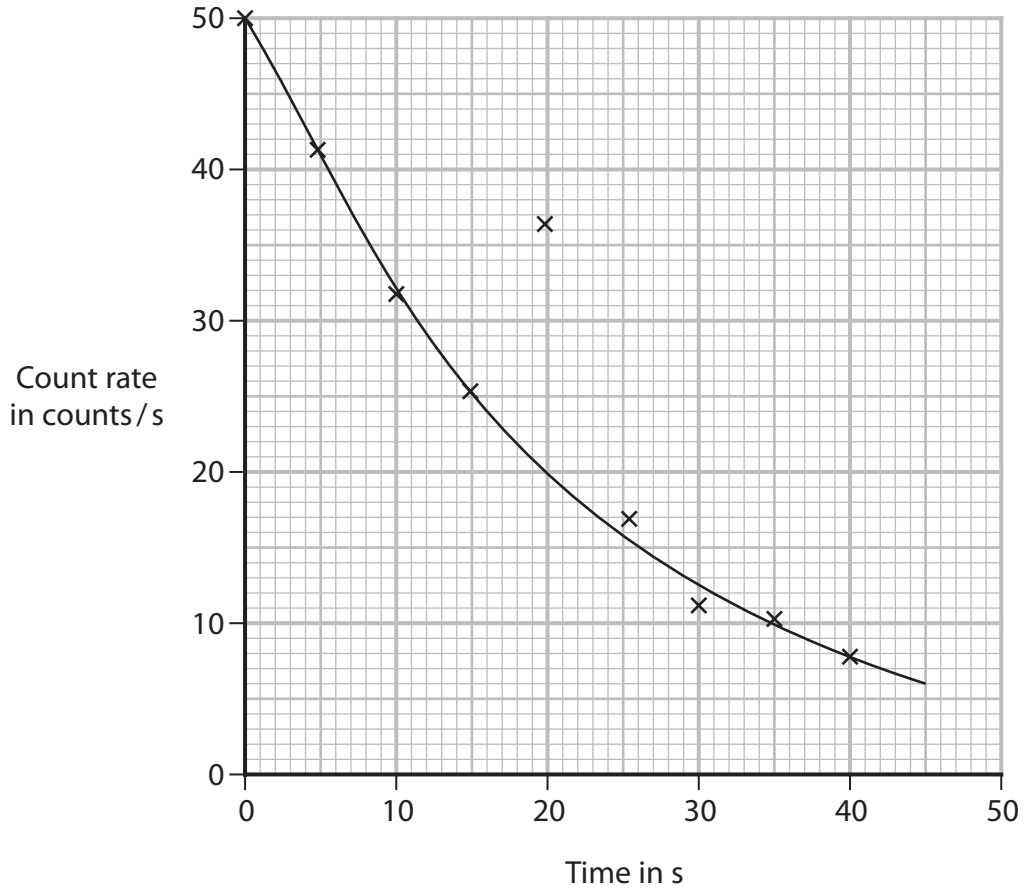

Draw a circle around the anomalous result.

(1)

(iii) Use the graph to determine the half-life of the radioactive sample.

(2)

half-life = ... s

(iv) Give a reason why the teacher should not expect the data points to lie exactly on the curve of best fit.

(1)

.....

.....

(Total for Question 1 = 8 marks)

www.dynamicpapers.com

2 A student investigates how the current in a filament lamp changes when the volta across the lamp is varied.

(a) Draw a circuit diagram the student could use in their investigation.

(4)

(b) The graph shows the student's results.

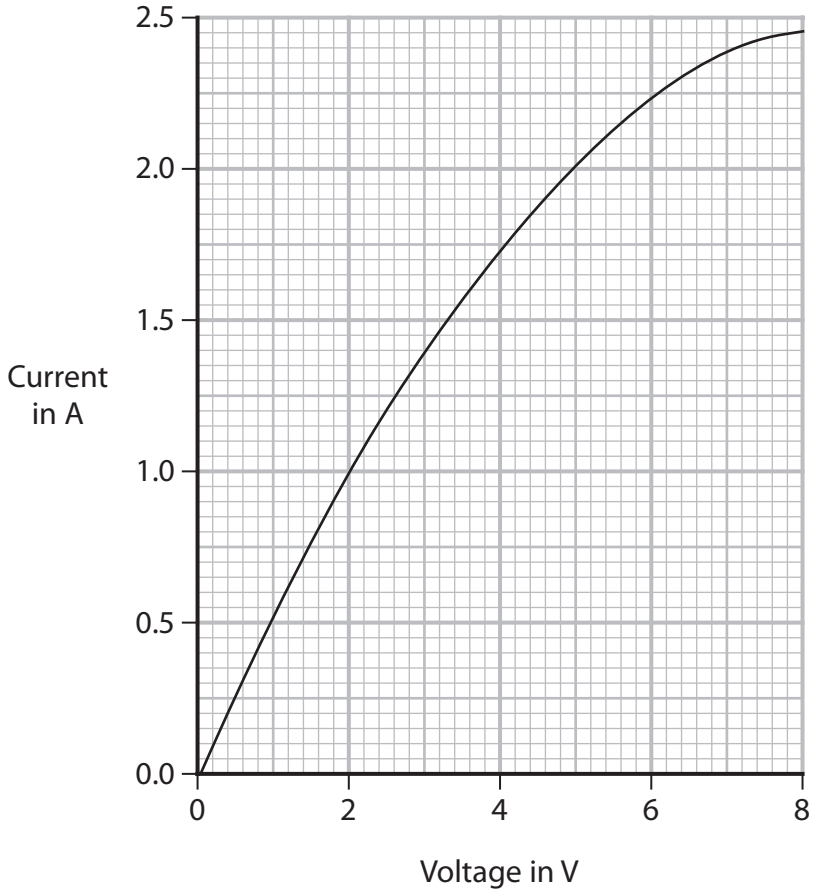

DO NOT WRITE IN THIS AREA
DO NOT WRITE IN THIS AREA
DO NOT WRITE IN THIS AREA

www.dynamicpapers.com

DO NOT WRITE IN THIS AREA
DO NOT WRITE IN THIS AREA
DO NOT WRITE IN THIS AREA

(i) Describe the relationship between current and voltage shown on the grap

.....

.....

.....

.....

(ii) State the formula linking resistance, voltage and current.

(1)

(iii) Use the graph to determine the resistance of the filament lamp when the voltage across the lamp is 7.2V.

(3)

resistance = ... Ω

(Total for Question 2 = 10 marks)

www.dynamicpapers.com

3 A family has a television set.

(a) The television set has a low power mode called standby.

When on standby, the power rating of the television set is 0.27 W.

Calculate the energy transferred to the television set on standby in 12 hours.

(3)

energy transferred = ... J

(b) In normal use, the current in the television set is 0.31 A.

(i) Explain how a fuse works to protect the television set if there is a fault.

(3)

.....

.....

.....

.....

.....

.....

(ii) Explain why a 13 A fuse is not an appropriate choice of fuse to use in the plug of this television set.

(2)

.....

.....

.....

.....

(Total for Question 3 = 8 marks)

DO NOT WRITE IN THIS AREA
DO NOT WRITE IN THIS AREA
DO NOT WRITE IN THIS AREA

www.dynamicpapers.com

DO NOT WRITE IN THIS AREA
DO NOT WRITE IN THIS AREA
DO NOT WRITE IN THIS AREA

BLANK PAGE

www.dynamicpapers.com

4 Ground-penetrating radar (GPR) uses radio waves to detect changes in material underground.

(a) (i) State the formula linking the speed, frequency and wavelength of a wave.

(1)

(ii) GPR radio waves have a frequency of 170 MHz.

The speed of radio waves is 3.0×10^8 m / s.

Calculate the wavelength of the waves.

(3)

wavelength = ... m

(b) (i) A radio wave passes through the ground and refracts at the boundary between soil and rock.

The diagram shows three wavefronts of the wave before and after refraction.

The wave is also reflected at the boundary between the soil and the rock.

Complete the diagram to show three wavefronts after the wave has been reflected at the boundary.

(3)

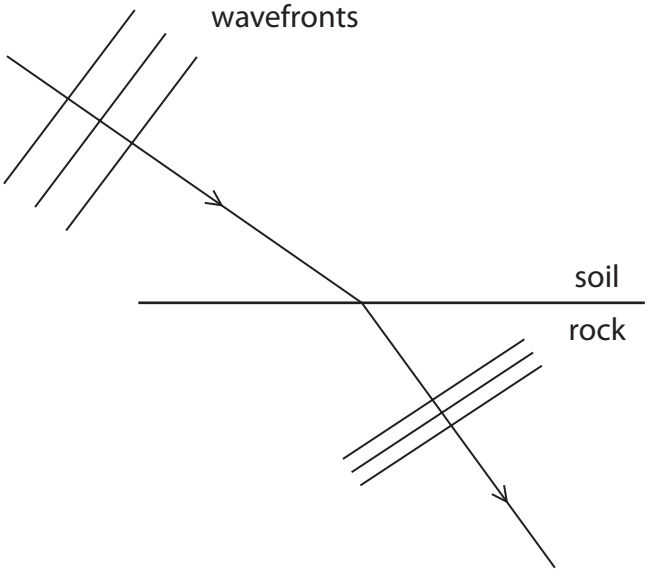

DO NOT WRITE IN THIS AREA
DO NOT WRITE IN THIS AREA
DO NOT WRITE IN THIS AREA

www.dynamicpapers.com

(ii) Explain why the radio waves passing through the rock have a smaller wavelength than the radio waves passing through the soil.

(

.....

.....

.....

.....

.....

.....

.....

(Total for Question 4 = 10 marks)

DO NOT WRITE IN THIS AREA
DO NOT WRITE IN THIS AREA
DO NOT WRITE IN THIS AREA

www.dynamicpapers.com

5 The drawing shows a camel and a person in a desert.



(Source: © Hennadii H/Shutterstock)

(a) Describe a method you could use to find the pressure a person exerts on the ground when standing on two feet.

(4)

DO NOT WRITE IN THIS AREA
DO NOT WRITE IN THIS AREA
DO NOT WRITE IN THIS AREA

www.dynamicpapers.com

DO NOT WRITE IN THIS AREA

DO NOT WRITE IN THIS AREA

DO NOT WRITE IN THIS AREA

(b) The total area of contact of the camel's feet with the ground is 1300 cm^2.

The mass of the camel is 660 kg.

Calculate the pressure this camel exerts on the ground.

(3)

pressure = ... N/cm^2

(Total for Question 5 = 7 marks)

www.dynamicpapers.com

6 The photograph shows an x-ray image of a person's knee. The person has had part their knee replaced.

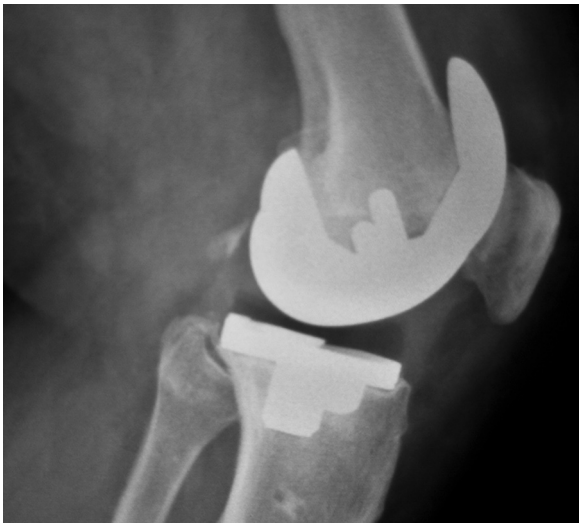

(Source: © edwardolive/Shutterstock)

(a) X-rays are part of the electromagnetic spectrum.

All electromagnetic waves are transverse waves and transfer energy.

(i) State another property that all electromagnetic waves have in common.

(1)

.....

(ii) State a harmful effect of excessive exposure to x-rays.

(1)

.....

DO NOT WRITE IN THIS AREA
DO NOT WRITE IN THIS AREA
DO NOT WRITE IN THIS AREA

www.dynamicpapers.com

(iii) Describe the difference between transverse waves and longitudinal waves.

You may draw a diagram to help your answer.

(3)

DO NOT WRITE IN THIS AREA
DO NOT WRITE IN THIS AREA
DO NOT WRITE IN THIS AREA

www.dynamicpapers.com

(b) The diagram shows a part of the knee called the patella. The patella has been removed from a person's knee.

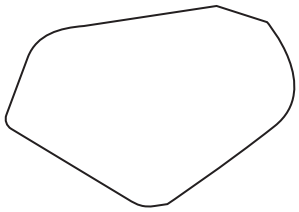

The patella is a small, irregularly shaped bone that is denser than water.

Describe how to find the mass and the volume of the patella bone.

(4)

DO NOT WRITE IN THIS AREA
DO NOT WRITE IN THIS AREA
DO NOT WRITE IN THIS AREA

www.dynamicpapers.com

DO NOT WRITE IN THIS AREA
DO NOT WRITE IN THIS AREA
DO NOT WRITE IN THIS AREA

(c) A scientist finds the volume and mass of a patella.

The mass of the patella is 17 g.

The volume of the patella is 13 cm^3.

Calculate the density of the patella.

Give your answer to 2 significant figures.

(4)

density = ... g / cm^3

(Total for Question 6 = 13 marks)

www.dynamicpapers.com

7 The circuit diagram shows a motor, power supply, switch and variable resistor connected in series.

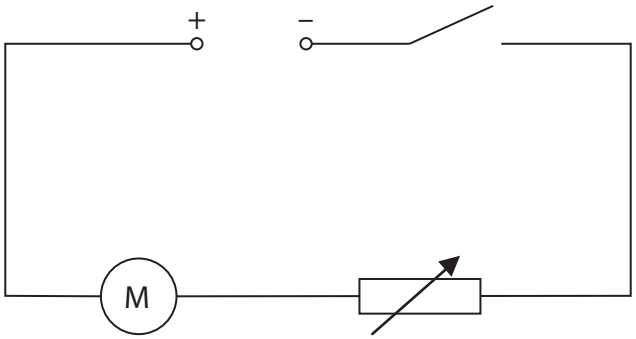

(a) The switch is open and the motor is not moving.

State how much energy is in the kinetic energy store of the motor.

(1)

kinetic energy = ... J

(b) The switch is closed.

The motor takes 0.42 seconds to reach its maximum speed of rotation.

The mean current in the motor is 3.9 A.

The voltage across the motor is 7.1 V.

Show that the work done on the motor during the 0.42 seconds is about 12 J.

(2)

work done = ... J

DO NOT WRITE IN THIS AREA
DO NOT WRITE IN THIS AREA
DO NOT WRITE IN THIS AREA

www.dynamicpapers.com

DO NOT WRITE IN THIS AREA
DO NOT WRITE IN THIS AREA
DO NOT WRITE IN THIS AREA

(c) Complete the Sankey diagram for the electric motor during the 0.42 seconds b giving the missing information.

(

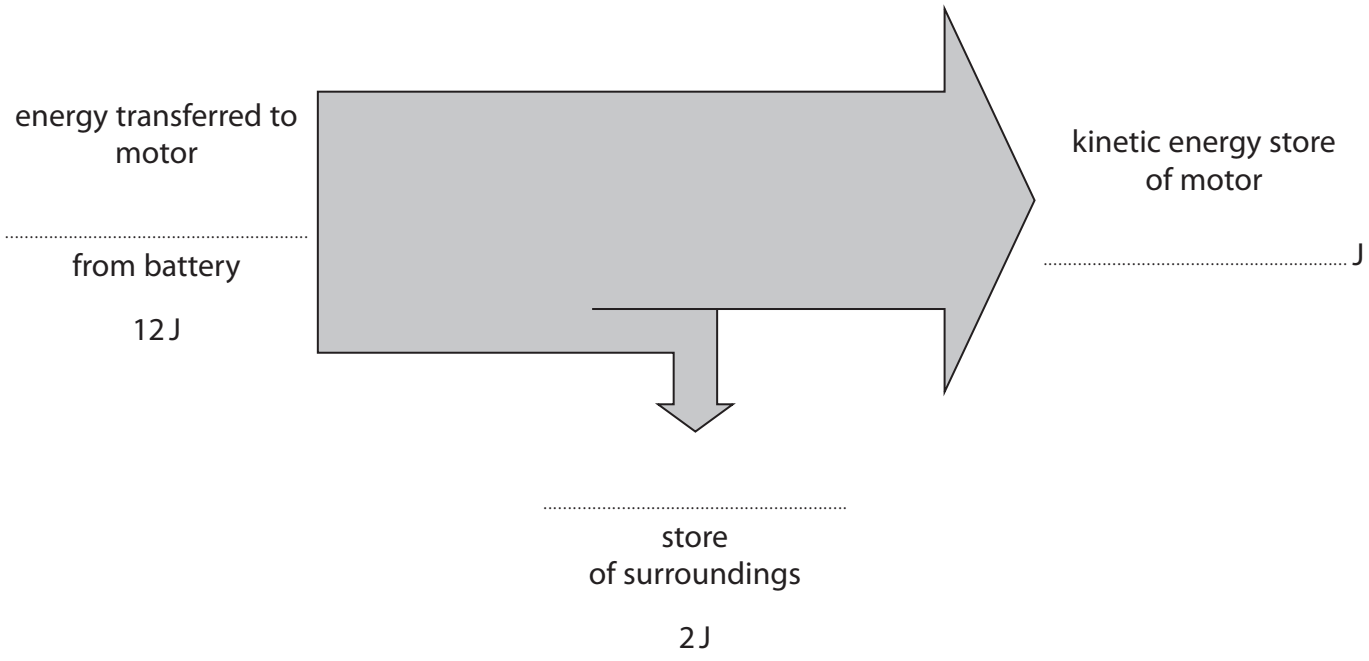

(d) Use the Sankey diagram to calculate the efficiency of the process of bringing the motor to its maximum speed of rotation.

(3)

efficiency = ... %

(Total for Question 7 = 9 marks)

www.dynamicpapers.com

8 In some countries, snow can fall and collect on the ground.

Diagram 1 shows that after the snow has fallen, the sky can be clear, leaving the snow directly exposed to the Sun.

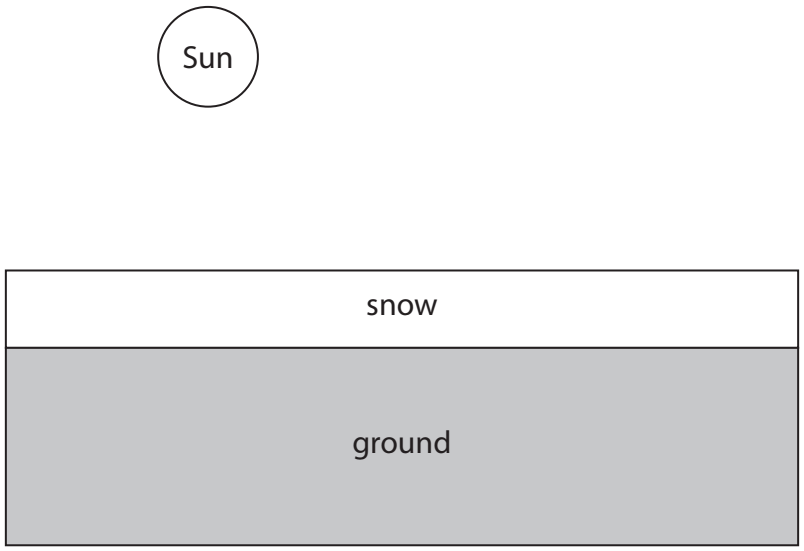

Diagram 1

(a) Explain why the white snow will take a long time to melt, even though directly exposed to the Sun.

(2)

DO NOT WRITE IN THIS AREA
DO NOT WRITE IN THIS AREA
DO NOT WRITE IN THIS AREA

www.dynamicpapers.com

DO NOT WRITE IN THIS AREA
DO NOT WRITE IN THIS AREA
DO NOT WRITE IN THIS AREA

(b) Diagram 2 shows a different piece of ground that has a metal drain cover.

If the snow lands on metal, the snow takes a shorter time to melt.

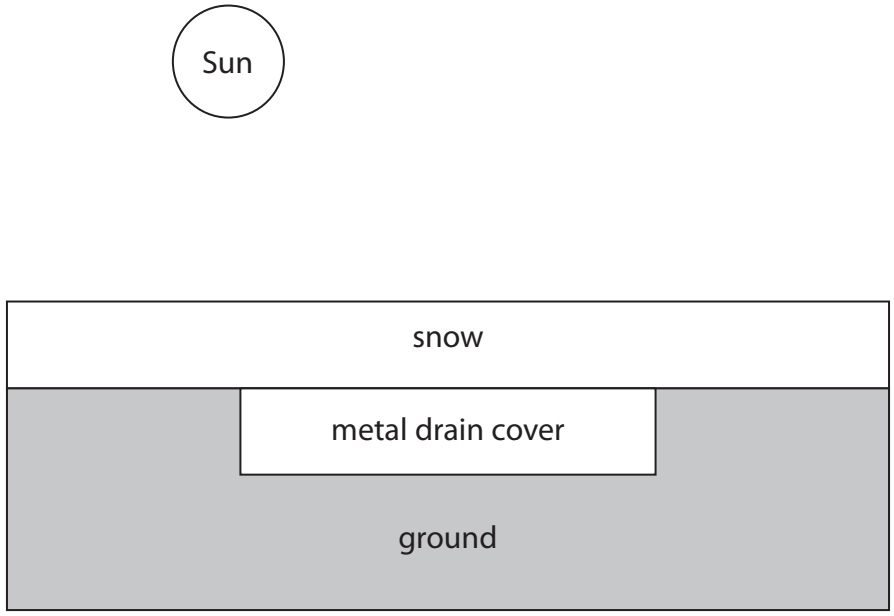

Diagram 2

Explain why the snow melts in a shorter time on the metal drain cover.

(2)

(c) Explain how a convection current above the snow increases the time taken for the snow to melt.

(2)

(Total for Question 8 = 6 marks)

www.dynamicpapers.com

9 A manometer is a device that can be used to measure the pressure difference between gas from a gas tap and the atmosphere.

When a gas tap is connected to the manometer, the liquid in the manometer moves due to the additional pressure of the gas.

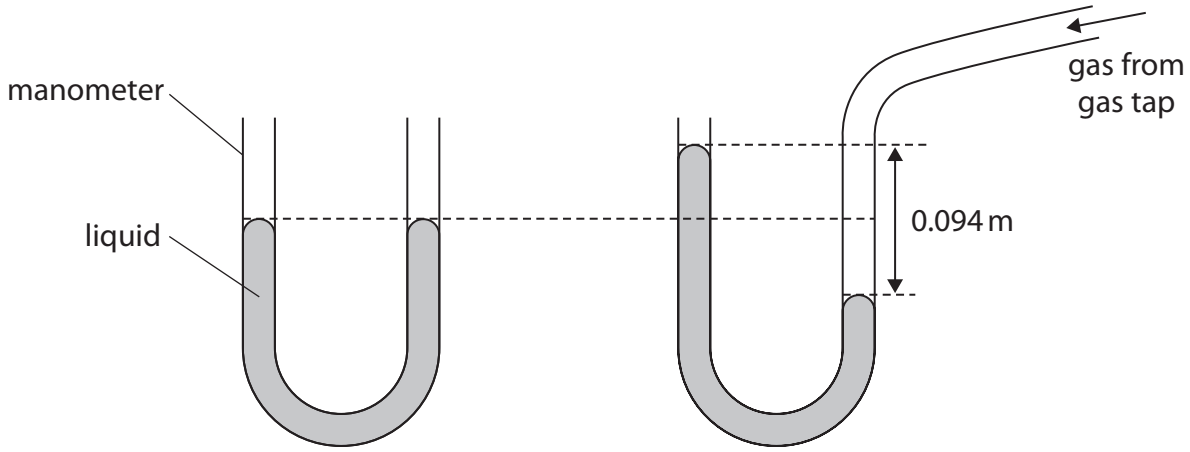

Before connecting gas tap After connecting gas tap

(a) The pressure difference is linked to the difference in height of the two surfaces of the liquid by the formula

$$\text{pressure difference} = \text{density} \times g \times \text{height difference}$$

The height difference between the two surfaces is 0.094 m.

Calculate the pressure difference between the gas from the gas tap and the atmosphere.

[for liquid, density = 14 000 kg / m^3]

(2)

pressure difference = ... Pa

DO NOT WRITE IN THIS AREA
DO NOT WRITE IN THIS AREA
DO NOT WRITE IN THIS AREA

www.dynamicpapers.com

DO NOT WRITE IN THIS AREA
DO NOT WRITE IN THIS AREA
DO NOT WRITE IN THIS AREA

(b) The graph shows how the velocity of the surface of the liquid changes with tim from when the gas tap is opened to when the water level stops moving.

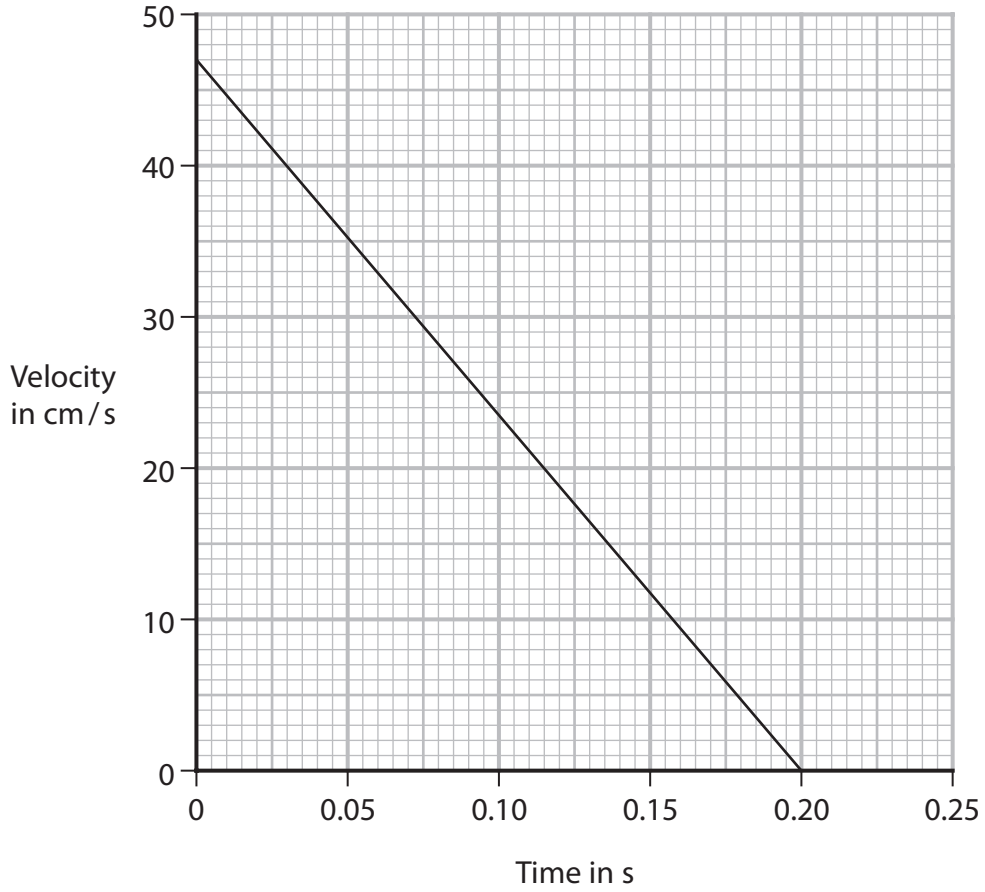

(i) Use the graph to show that the distance travelled by the surface of the liquid is 4.7 cm.

(3)

(ii) Calculate the acceleration of the surface of the liquid.

(3)

acceleration = ... cm / s^2

www.dynamicpapers.com

(c) Explain how the gas pressure changes if the temperature of the gas increases.

You should use ideas about particles in your answer.

(3)

.....

.....

.....

.....

.....

.....

(Total for Question 9 = 11 marks)

DO NOT WRITE IN THIS AREA
DO NOT WRITE IN THIS AREA
DO NOT WRITE IN THIS AREA

www.dynamicpapers.com

DO NOT WRITE IN THIS AREA
DO NOT WRITE IN THIS AREA
DO NOT WRITE IN THIS AREA

BLANK PAGE

www.dynamicpapers.com

10 A student investigates how the time taken for a ball to roll down a slope changes with the distance from the bottom of the slope.

This is the student's method.

- place a ball on the slope 10 cm from the bottom of the slope
- release the ball and start a stopwatch
- stop the stopwatch when the ball arrives at the bottom of the slope
- record the time taken for the ball to roll down the slope
- repeat for different distances from the bottom of the slope

(a) Complete the table by placing a tick (✓) to show which variables are the independent, dependent and control variables in this investigation.

(4)

	Independent	**Dependent**	**Control**
Surface of slope			
Angle of slope			
Distance travelled			
Time taken			

(b) The table shows the student's results.

Distance travelled in cm	**Time taken in s**
10	0.41
20	0.58
30	0.71
40	0.82
50	0.91

(i) Plot the student's data on the grid.

(1)

(ii) Draw a best fit curve.

(1)

DO NOT WRITE IN THIS AREA
DO NOT WRITE IN THIS AREA
DO NOT WRITE IN THIS AREA

www.dynamicpapers.com

DO NOT WRITE IN THIS AREA
DO NOT WRITE IN THIS AREA
DO NOT WRITE IN THIS AREA

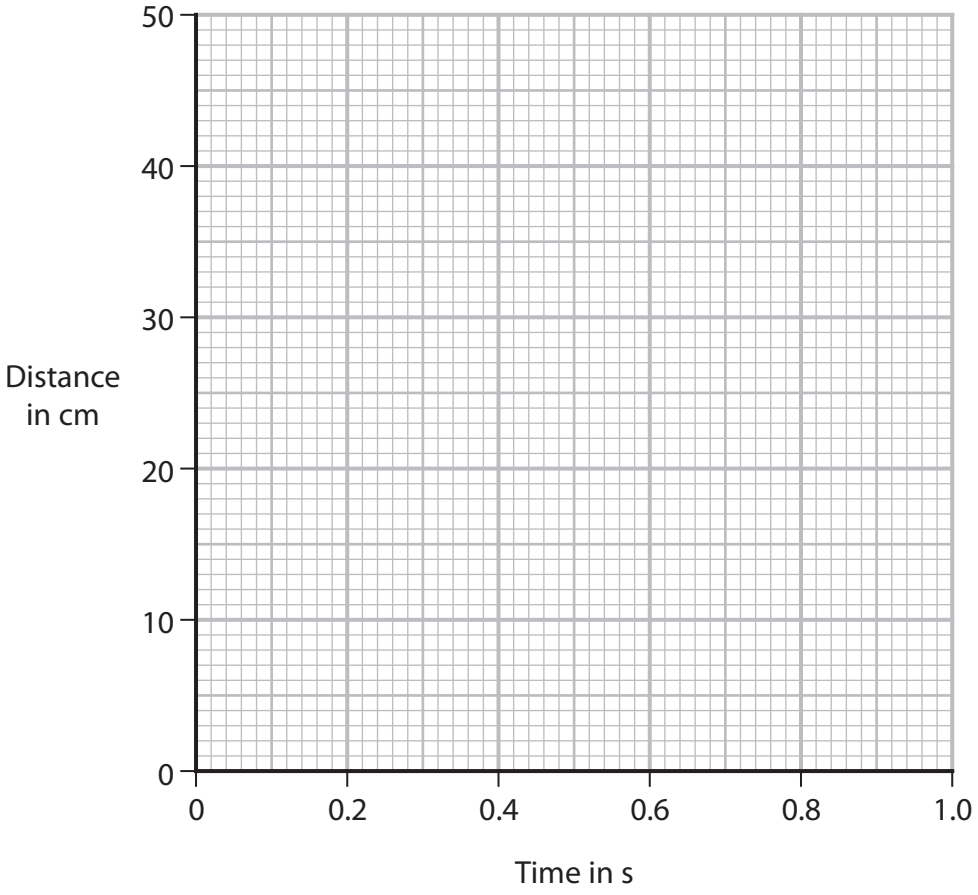

(iii) The student concludes that the results obey this relationship

$$\text{distance} \div (\text{time}^2) = \text{constant}$$

Use the student's data to deduce whether the student's results support this conclusion.

(4)

(Total for Question 10 = 10 marks)

www.dynamicpapers.com

11 Diagram 1 shows a light-emitting diode (LED) and a resistor in series with a cell an an ammeter.

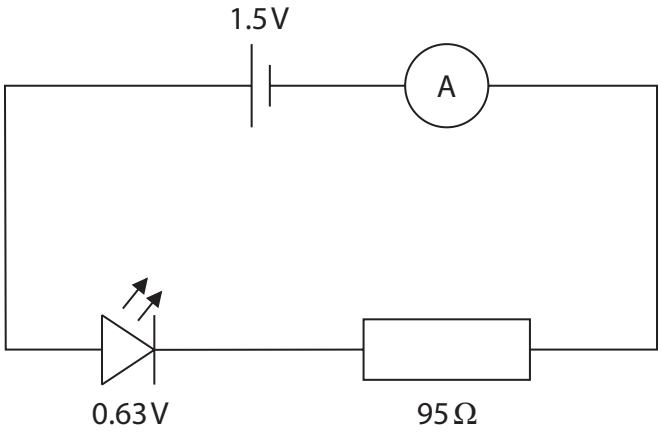

Diagram 1

(a) The voltage across the LED is 0.63 V.

Calculate the current in the circuit.

Give your answer in milliamps.

(4)

current = ... mA

DO NOT WRITE IN THIS AREA
DO NOT WRITE IN THIS AREA
DO NOT WRITE IN THIS AREA

www.dynamicpapers.com

DO NOT WRITE IN THIS AREA
DO NOT WRITE IN THIS AREA
DO NOT WRITE IN THIS AREA

(b) Diagram 2 shows a second LED and an extra resistor connected in parallel with the cell.

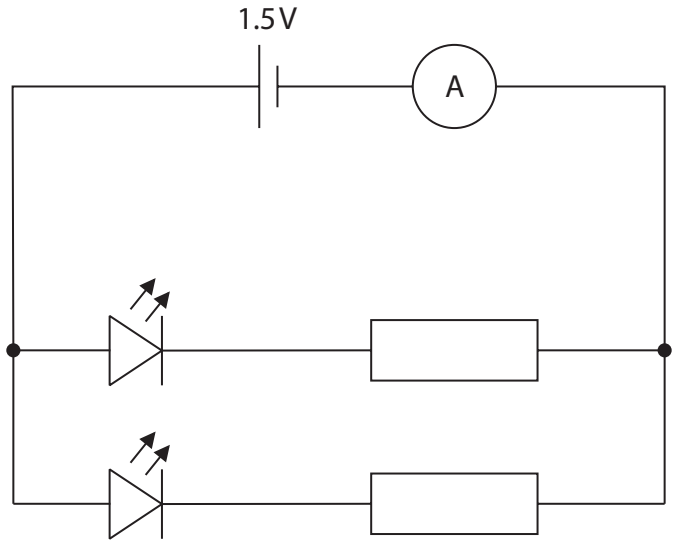

Diagram 2

The resistor and the LED are the same as the components used in diagram 1.
The two resistors are identical and the two LEDs are identical.

Explain how the ammeter reading will change.

(4)

(Total for Question 11 = 8 marks)

www.dynamicpapers.com

12 A device called a metal detector can be used to find metal buried underground.



(Source: © mArt88/Shutterstock)

The metal detector has two circuits, each containing a coil of copper wire.

Diagram 1 shows the circuit for the transmitter coil.

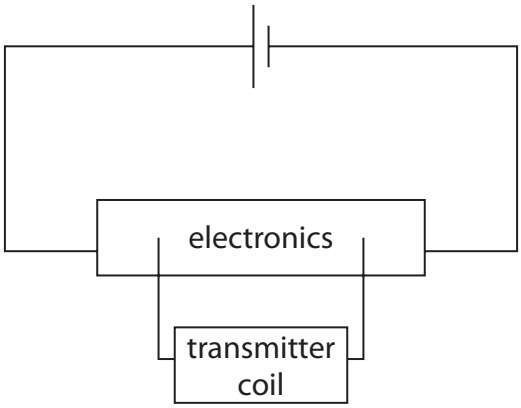

Diagram 1

(a) Suggest why there is a magnetic field around the transmitter coil.

(1)

.....

(b) The cell supplies direct current (d.c.). The electronics in diagram 1 change the direct current into alternating current (a.c.) in the coil.

(i) Describe the difference between direct current (d.c.) and alternating current (a.c.).

(2)

.....

.....

.....

.....

DO NOT WRITE IN THIS AREA
DO NOT WRITE IN THIS AREA
DO NOT WRITE IN THIS AREA

www.dynamicpapers.com

DO NOT WRITE IN THIS AREA
DO NOT WRITE IN THIS AREA
DO NOT WRITE IN THIS AREA

(ii) Alternating current is supplied to the transmitter coil.

Diagram 2 shows a gold ring in the soil below the metal detector.

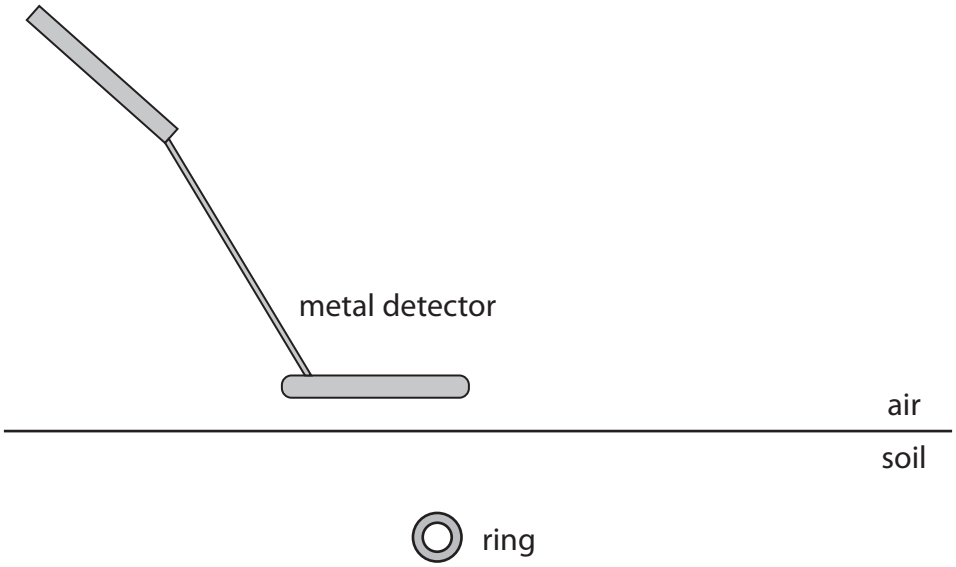

Diagram 2

Explain why there is an alternating current in the gold ring.

(3)

www.dynamicpapers.com

(c) Diagram 3 shows the circuit for the receiver coil.

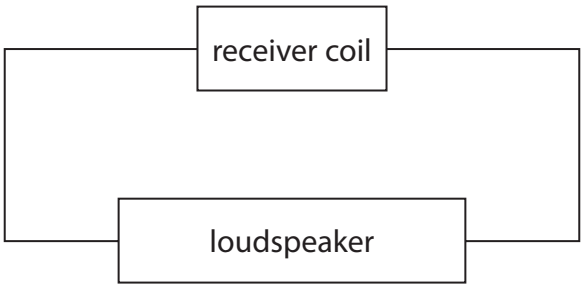

Diagram 3

As a result of the alternating current in the gold ring, there is an alternating current in the receiving coil.

Explain how an alternating current in the receiving coil causes a sound to be emitted from the loudspeaker.

(4)

(Total for Question 12 = 10 marks)

TOTAL FOR PAPER = 110 MARKS

DO NOT WRITE IN THIS AREA
DO NOT WRITE IN THIS AREA
DO NOT WRITE IN THIS AREA

www.dynamicpapers.com

Pearson Edexcel International GCSE (9–1

Thursday 25 May 2023

Morning (Time: 2 hours)

Paper reference **4PH1/1P 4SD0/1P**

Physics

UNIT: 4PH1
Science (Double Award) 4SD0
PAPER: 1P

Equation Booklet

Do not return this Booklet with the question paper.

Turn over ▶

P71955A

©2023 Pearson Education Ltd.

N:1/1/1/1/1/

P 7 1 9 5 5 A

Pearson

www.dynamicpapers.com

These equations may be required for both International GCSE Physics (4PH1) and International GCSE Combined Science (4SD0) papers.

1. Forces and Motion	
average speed = $\frac{\text{distance moved}}{\text{time taken}}$	
acceleration = $\frac{\text{change in velocity}}{\text{time taken}}$	$a = \frac{(v-u)}{t}$
(final speed)^2 = (initial speed)^2 + (2 × acceleration × distance moved)	$v^2 = u^2 + (2 \times a \times s)$
force = mass × acceleration	$F = m \times a$
weight = mass × gravitational field strength	$W = m \times g$
2. Electricity	
power = current × voltage	$P = I \times V$
energy transferred = current × voltage × time	$E = I \times V \times t$
voltage = current × resistance	$V = I \times R$
charge = current × time	$Q = I \times t$
energy transferred = charge × voltage	$E = Q \times V$
3. Waves	
wave speed = frequency × wavelength	$v = f \times \lambda$
frequency = $\frac{1}{\text{time period}}$	$f = \frac{1}{T}$
refractive index = $\frac{\sin(\text{angle of incidence})}{\sin(\text{angle of refraction})}$	$n = \frac{\sin i}{\sin r}$
$\sin(\text{critical angle}) = \frac{1}{\text{refractive index}}$	$\sin c = \frac{1}{n}$

www.dynamicpapers.com

4. Energy resources and energy transfers	
efficiency = $\frac{\text{useful energy output}}{\text{total energy output}} \times 100\%$	
work done = force × distance moved	$W = F \times d$
gravitational potential energy = mass × gravitational field strength × height	$GPE = m \times g \times h$
kinetic energy = $\frac{1}{2}$ × mass × speed^2	$KE = \frac{1}{2} \times m \times v^2$
power = $\frac{\text{work done}}{\text{time taken}}$	$P = \frac{W}{t}$
5. Solids, liquids and gases	
density = $\frac{\text{mass}}{\text{volume}}$	$\rho = \frac{m}{V}$
pressure = $\frac{\text{force}}{\text{area}}$	$p = \frac{F}{A}$
pressure difference = height × density × gravitational field strength	$p = h \times \rho \times g$
$\frac{\text{pressure}}{\text{temperature}}$ = constant	$\frac{p_1}{T_1} = \frac{p_2}{T_2}$
pressure × volume = constant	$p_1 \times V_1 = p_2 \times V_2$
8. Astrophysics	
orbital speed = $\frac{2 \times \pi \times \text{orbital radius}}{\text{time period}}$	$v = \frac{2 \times \pi \times r}{T}$

The equations on the following page will only be required for International GCSE Physics.

www.dynamicpapers.com

These additional equations may be required in International GCSE Physics papers 2 and 2PR.

1. Forces and Motion	
momentum = mass × velocity	$p = m \times v$
force = $\frac{\text{change in momentum}}{\text{time taken}}$	$F = \frac{(mv - mu)}{t}$
moment = force × perpendicular distance from the pivot	
5. Solids, liquids and gases	
change in thermal energy = mass × specific heat capacity × change in temperature	$\Delta Q = m \times c \times \Delta T$
6. Magnetism and electromagnetism	
relationship between input and output voltages for a transformer	$\frac{\text{input (primary) voltage}}{\text{output (secondary) voltage}} = \frac{\text{primary turns}}{\text{secondary turns}}$
input power = output power	$V_p I_p = V_s I_s$ for 100% efficiency
8. Astrophysics	
$\frac{\text{change in wavelength}}{\text{reference wavelength}} = \frac{\text{velocity of a galaxy}}{\text{speed of light}}$	$\frac{\lambda - \lambda_0}{\lambda_0} = \frac{\Delta\lambda}{\lambda_0} = \frac{v}{c}$

END OF EQUATION LIST