www.dynamicpapers.com

Please check the examination details below before entering your candidate information

Candidate surname	Other names

Pearson Edexcel International GCSE

Centre Number | Candidate Number

Tuesday 15 January 2019

Morning (Time: 2 hours 30 minutes) | Paper Reference **4MB1/02R**

Mathematics B

Paper 2R



You must have: Ruler graduated in centimetres and millimetres, protractor, compasses, pen, HB pencil, eraser, calculator. Tracing paper may be used.

Total Marks

Instructions

- Use **black** ink or ball-point pen.
- **Fill in the boxes** at the top of this page with your name, centre number and candidate number.
- Answer **all** questions.
- Answer the questions in the spaces provided
  – *there may be more space than you need.*

Information

- The total mark for this paper is 100.
- The marks for **each** question are shown in brackets
  – *use this as a guide as to how much time to spend on each question.*

Advice

- Read each question carefully before you start to answer it.
- Check your answers if you have time at the end.
- Without sufficient working, correct answers may be awarded no marks.

Turn over ▶

P60795A

©2019 Pearson Education Ltd.

1/1/1/C2/

P 6 0 7 9 5 A 0 1 3 6

Pearson

www.dynamicpapers.com

Answer ALL ELEVEN questions.

Write your answers in the spaces provided.

You must write down all the stages in your working.

1

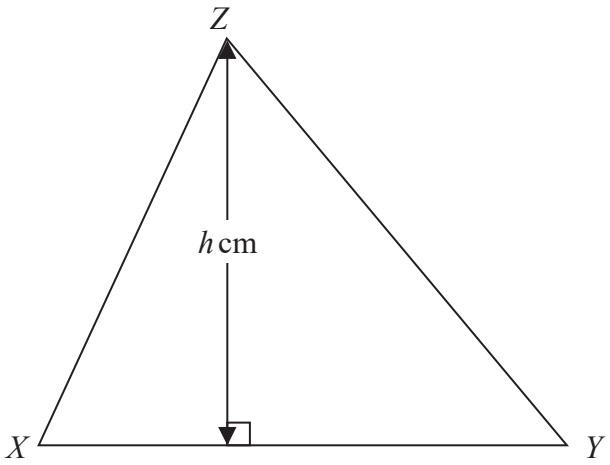

Diagram **NOT** accurately drawn

Figure 1

In Figure 1, $\triangle XYZ$ has base XY and height h cm.

The length of XY is 7.2 cm, to 2 significant figures.

(a) Write down the lower bound for the length of XY.

(1)

The area of $\triangle XYZ$ is 29 cm^2, to 2 significant figures.

(b) Write down the upper bound for the area of $\triangle XYZ$.

(1)

(c) Calculate, to 3 decimal places, the upper bound of h.

(2)

DO NOT WRITE IN THIS AREA
DO NOT WRITE IN THIS AREA
DO NOT WRITE IN THIS AREA

www.dynamicpapers.com

DO NOT WRITE IN THIS AREA
DO NOT WRITE IN THIS AREA
DO NOT WRITE IN THIS AREA

Question 1 continued

(Total for Question 1 is 4 marks)

www.dynamicpapers.com

2 (a) Complete the table of values for $y = x^2 - 3x + 1$

x	−1	0	1	2	3	4	5
y			−1		1	5	

(2)

(b) On the grid opposite, plot the points from your completed table and join them to form a smooth curve.

(2)

(c) Use your graph to find an estimate for the minimum value of y.

(1)

(d) Use your graph to find estimates, to one decimal place, for the solutions of the equation $x^2 - 3x + 1 = 0$

(1)

(e) By drawing a suitable straight line on your grid, find estimates, to one decimal place, for the solutions of the equation $x^2 - 4x + 2 = 0$

(3)

DO NOT WRITE IN THIS AREA
DO NOT WRITE IN THIS AREA
DO NOT WRITE IN THIS AREA

www.dynamicpapers.com

DO NOT WRITE IN THIS AREA
DO NOT WRITE IN THIS AREA
DO NOT WRITE IN THIS AREA

Question 2 continued

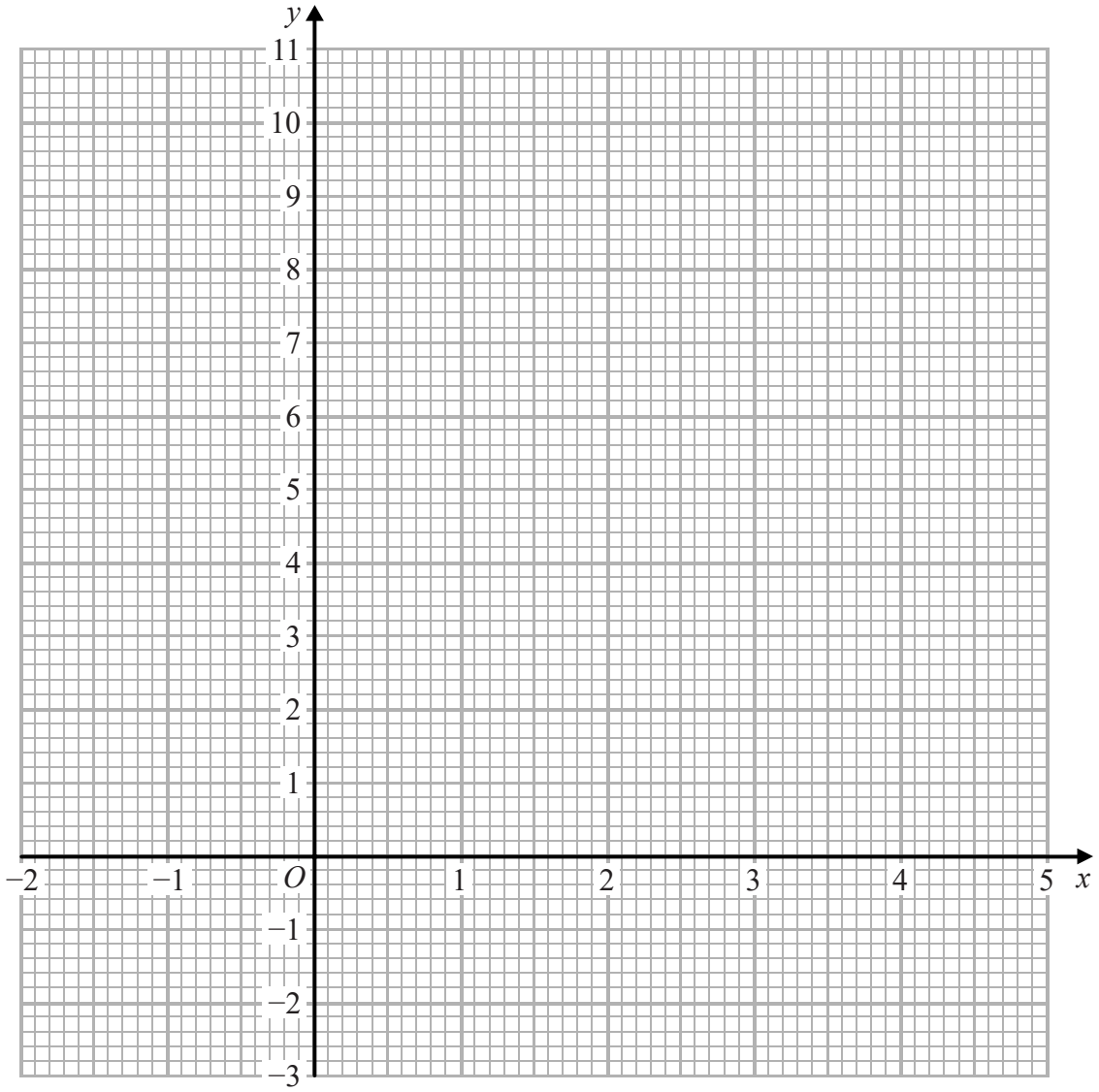

Turn over for a spare grid if you need to redraw your graph.

www.dynamicpapers.com

Question 2 continued

DO NOT WRITE IN THIS AREA
DO NOT WRITE IN THIS AREA
DO NOT WRITE IN THIS AREA

www.dynamicpapers.com

Question 2 continued

Only use this grid if you need to redraw your graph.

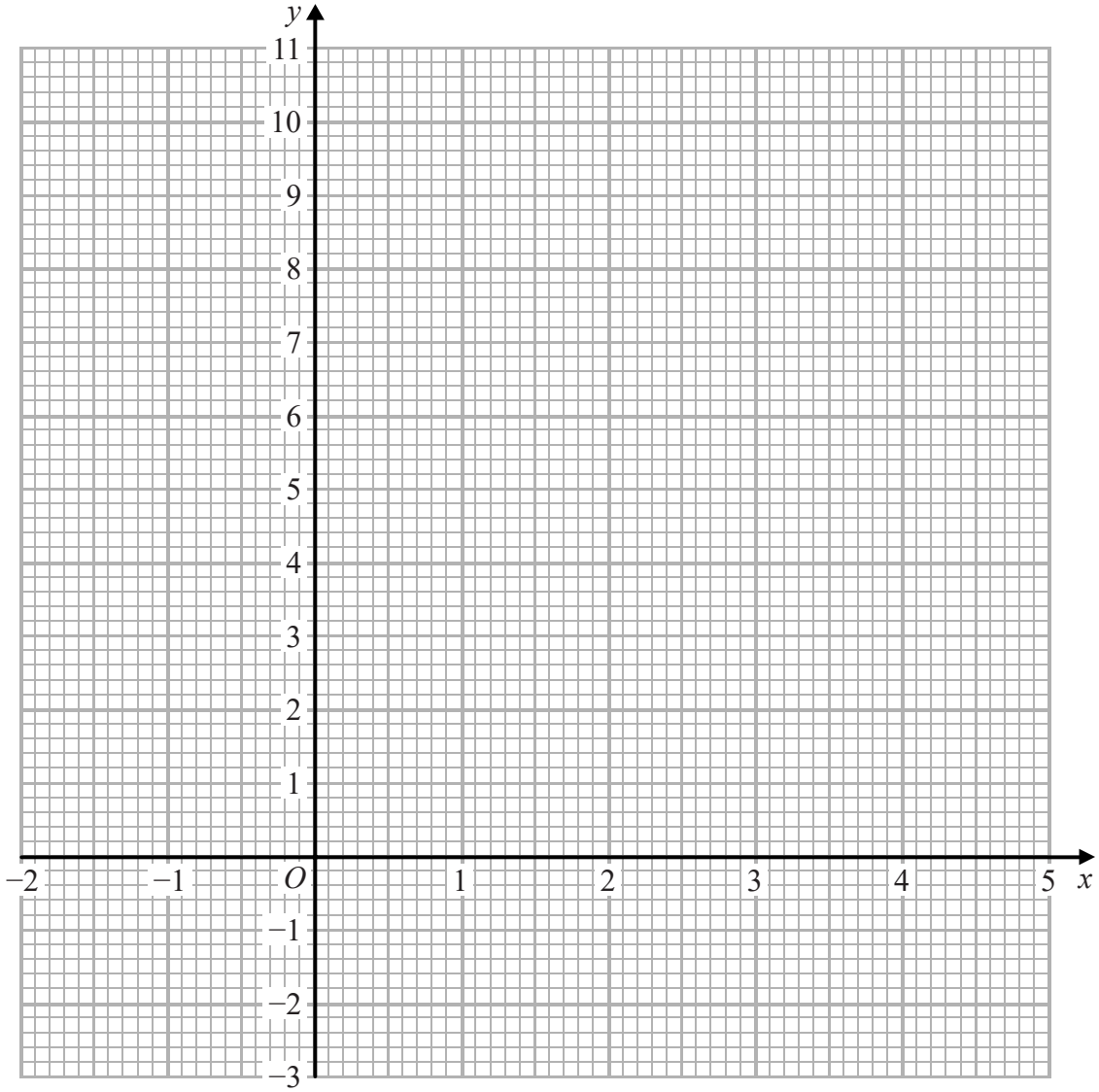

(Total for Question 2 is 9 marks)

DO NOT WRITE IN THIS AREA
DO NOT WRITE IN THIS AREA
DO NOT WRITE IN THIS AREA

www.dynamicpapers.com

3 Hugh and Pau are planning to sell ice creams at a charity event.

They buy enough ingredients to make exactly 270 ice creams.

Hugh and Pau make vanilla flavour, strawberry flavour and chocolate flavour ice creams. The numbers of vanilla flavour, strawberry flavour and chocolate flavour ice creams they make are in the ratios 2 : 3 : 4

(a) Calculate the number of chocolate flavour ice creams they make.

(3)

Hugh and Pau buy all the ingredients for the 270 ice creams at a total cost of £64.80

They calculate the selling price of each ice cream so that if they sell all 270 ice creams, they would make a profit of £1.20 on each ice cream.

(b) Calculate the percentage profit that Hugh and Pau would make if they sell all 270 ice creams at their calculated selling price.

(3)

At the charity event, Hugh and Pau sell $\frac{8}{9}$ of the 270 ice creams at their calculated selling price.

They then sell the remainder of the ice creams at half this selling price.

(c) Calculate the total profit, in pounds, that they make by selling all 270 ice creams.

(3)

DO NOT WRITE IN THIS AREA
DO NOT WRITE IN THIS AREA
DO NOT WRITE IN THIS AREA

www.dynamicpapers.com

Question 3 continued

DO NOT WRITE IN THIS AREA
DO NOT WRITE IN THIS AREA
DO NOT WRITE IN THIS AREA

www.dynamicpapers.com

Question 3 continued

DO NOT WRITE IN THIS AREA
DO NOT WRITE IN THIS AREA
DO NOT WRITE IN THIS AREA

www.dynamicpapers.com

Question 3 continued

(Total for Question 3 is 9 marks)

DO NOT WRITE IN THIS AREA
DO NOT WRITE IN THIS AREA
DO NOT WRITE IN THIS AREA

www.dynamicpapers.com

4

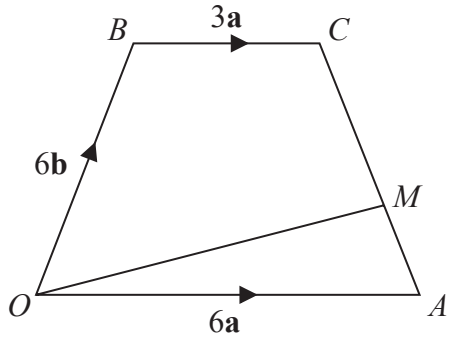

Diagram **NOT** accurately drawn

Figure 2

In Figure 2, $OACB$ is a trapezium in which $\overrightarrow{OA} = 6\mathbf{a}$, $\overrightarrow{OB} = 6\mathbf{b}$ and $\overrightarrow{BC} = 3\mathbf{a}$

M is the point on AC such that $AM : AC = 1 : 3$

(a) Find, in terms of **a** and **b**, simplifying your answer where possible,

(i) $\overrightarrow{AB}$ (ii) $\overrightarrow{AC}$ (iii) $\overrightarrow{AM}$

(3)

The point N is such that $\overrightarrow{ON} = \mu\overrightarrow{OM}$ where $\mu > 1$ and such that BCN is a straight line.

(b) Find and simplify an expression, in terms of **a** and **b**, for $\overrightarrow{ON}$.

(4)

Given that the area of $\triangle OAM$ is $12\,\text{cm}^2$

(c) find the area, in cm^2, of $\triangle NMC$.

(3)

DO NOT WRITE IN THIS AREA DO NOT WRITE IN THIS AREA DO NOT WRITE IN THIS AREA

www.dynamicpapers.com

Question 4 continued

DO NOT WRITE IN THIS AREA
DO NOT WRITE IN THIS AREA
DO NOT WRITE IN THIS AREA

www.dynamicpapers.com

Question 4 continued

DO NOT WRITE IN THIS AREA
DO NOT WRITE IN THIS AREA
DO NOT WRITE IN THIS AREA

www.dynamicpapers.com

Question 4 continued

(Total for Question 4 is 10 marks)

DO NOT WRITE IN THIS AREA
DO NOT WRITE IN THIS AREA
DO NOT WRITE IN THIS AREA

www.dynamicpapers.com

5 On the grid opposite, triangle B is the image of triangle A under a single transformation.

(a) Describe fully the single transformation.

(3)

Triangle B is transformed to triangle C under the transformation with matrix $\mathbf{M}$ where

$$\mathbf{M} = \begin{pmatrix} -1 & 0 \\ -3 & -1 \end{pmatrix}$$

(b) On the grid, draw and label triangle C.

(3)

Triangle C is transformed to triangle D under the transformation with matrix $\mathbf{N}$ where

$$\mathbf{N} = \begin{pmatrix} 3 & -1 \\ -1 & 0 \end{pmatrix}$$

(c) On the grid, draw and label triangle D.

(3)

Triangle D is the image of triangle B under a **single** transformation.

(d) Describe fully this transformation.

(2)

DO NOT WRITE IN THIS AREA
DO NOT WRITE IN THIS AREA
DO NOT WRITE IN THIS AREA

www.dynamicpapers.com

DO NOT WRITE IN THIS AREA
DO NOT WRITE IN THIS AREA
DO NOT WRITE IN THIS AREA

Question 5 continued

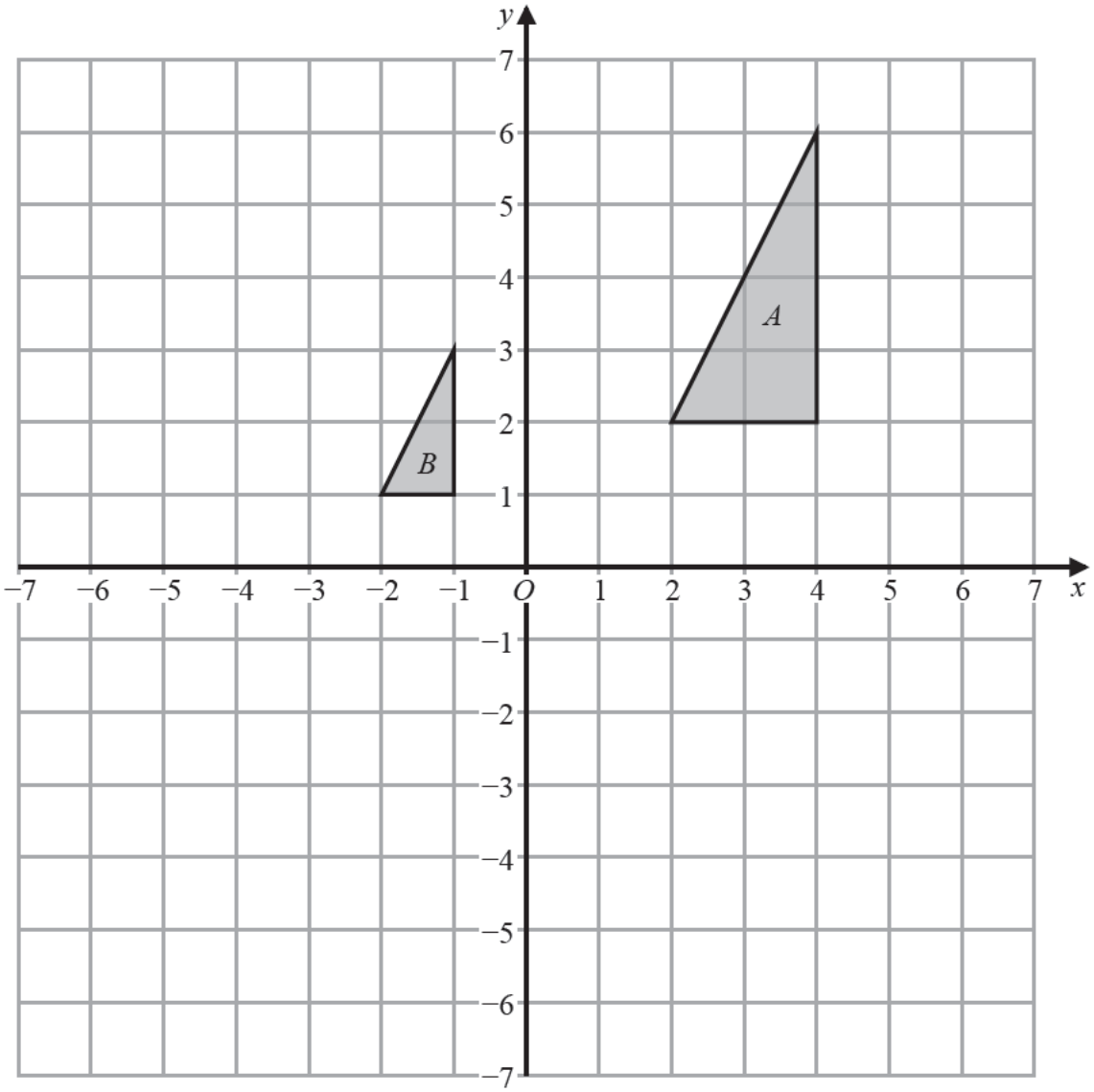

Turn over for a spare grid if you need to redraw your triangles.

www.dynamicpapers.com

Question 5 continued

DO NOT WRITE IN THIS AREA
DO NOT WRITE IN THIS AREA
DO NOT WRITE IN THIS AREA

www.dynamicpapers.com

DO NOT WRITE IN THIS AREA
DO NOT WRITE IN THIS AREA
DO NOT WRITE IN THIS AREA

Question 5 continued

Only use this grid if you need to redraw your triangles.

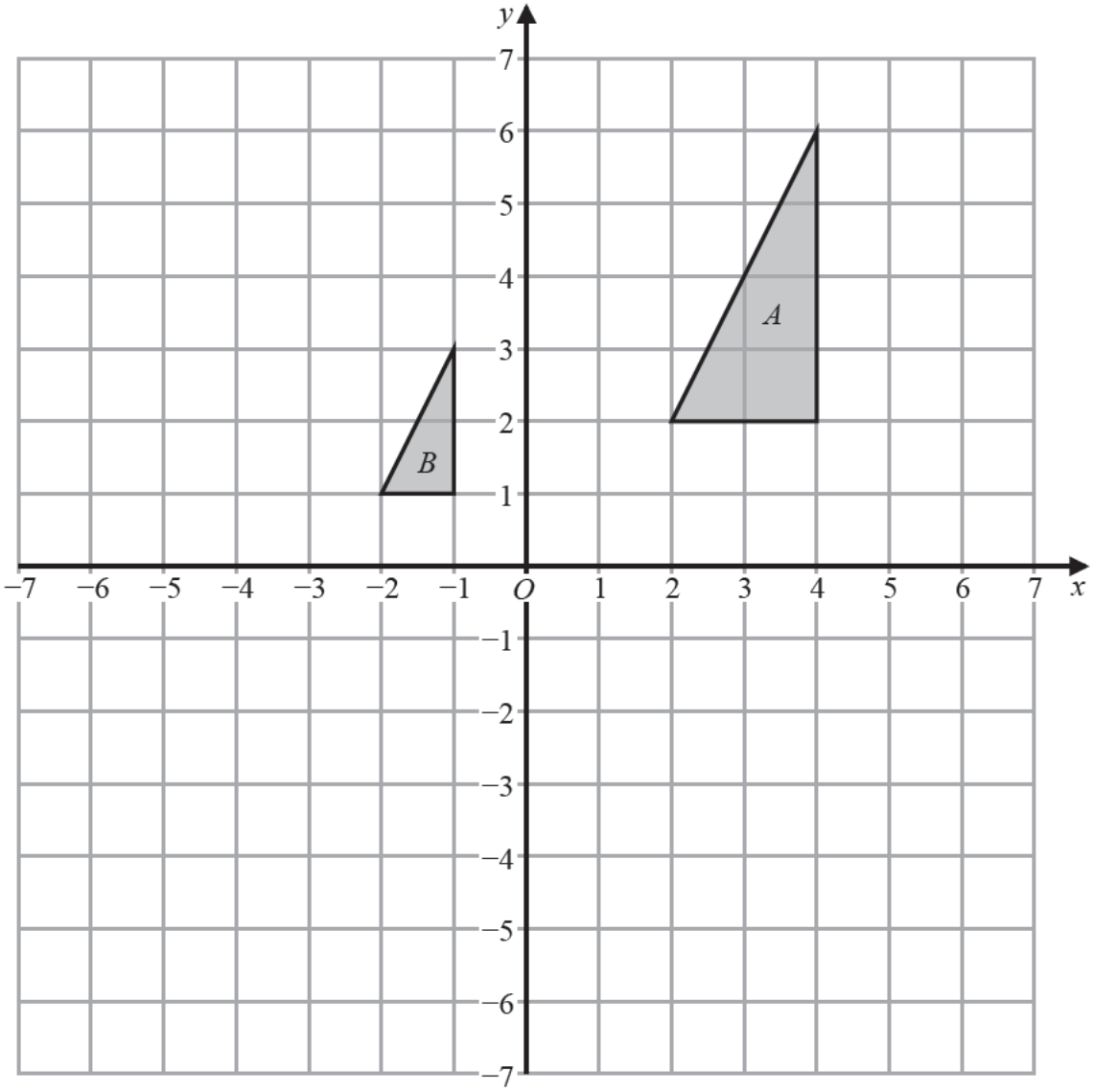

(Total for Question 5 is 11 marks)

www.dynamicpapers.com

6 All 35 students in class 11T were asked which of rugby (R), cricket (C) and football (F) they like.

Of these 35 students

14 like rugby
20 like cricket
12 like football
6 like both cricket and football
7 like both rugby and football
4 like all three sports
5 do not like any of rugby, cricket or football.

Let x be the number of students in class 11T who like both rugby and cricket.

(a) Show all this information on the Venn diagram, giving the number of elements in each appropriate subset, in terms of x where necessary.

(3)

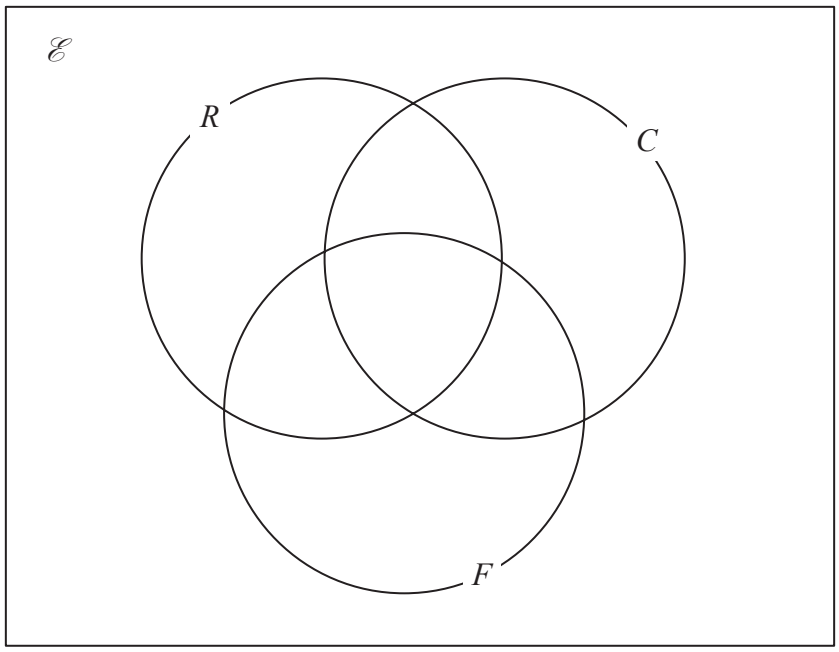

(b) Find the value of x.

(2)

(c) Find

(i) $n(R \cup F)$

(ii) $n(R \cap [C \cup F])$

(2)

DO NOT WRITE IN THIS AREA
DO NOT WRITE IN THIS AREA
DO NOT WRITE IN THIS AREA

www.dynamicpapers.com

DO NOT WRITE IN THIS AREA
DO NOT WRITE IN THIS AREA
DO NOT WRITE IN THIS AREA

Question 6 continued

Question 6 continues on the next page.

www.dynamicpapers.com

Question 6 continued

Some of the 14 students in class 11T, who like rugby, play for a rugby club team.

The incomplete probability tree diagram gives information about these 14 students.

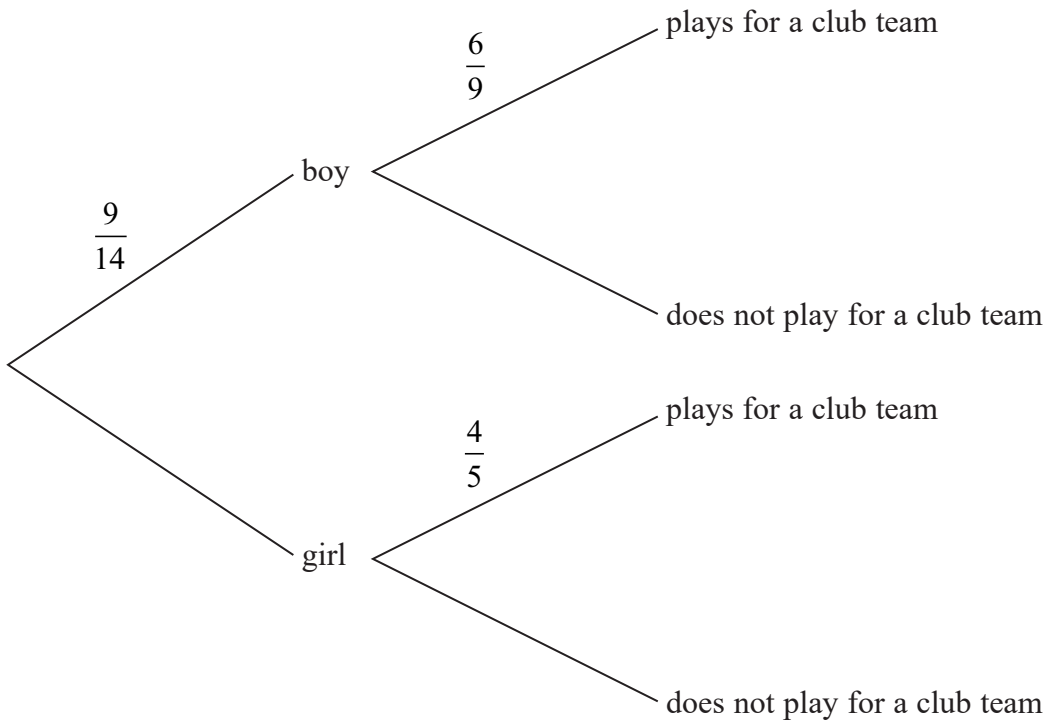

(d) Complete the probability tree diagram.

(2)

A student who likes rugby in class 11T is to be chosen at random.

(e) Find the probability that this student plays rugby for a club team.

(2)

DO NOT WRITE IN THIS AREA
DO NOT WRITE IN THIS AREA
DO NOT WRITE IN THIS AREA

www.dynamicpapers.com

Question 6 continued

(Total for Question 6 is 11 marks)

DO NOT WRITE IN THIS AREA
DO NOT WRITE IN THIS AREA
DO NOT WRITE IN THIS AREA

www.dynamicpapers.com

7

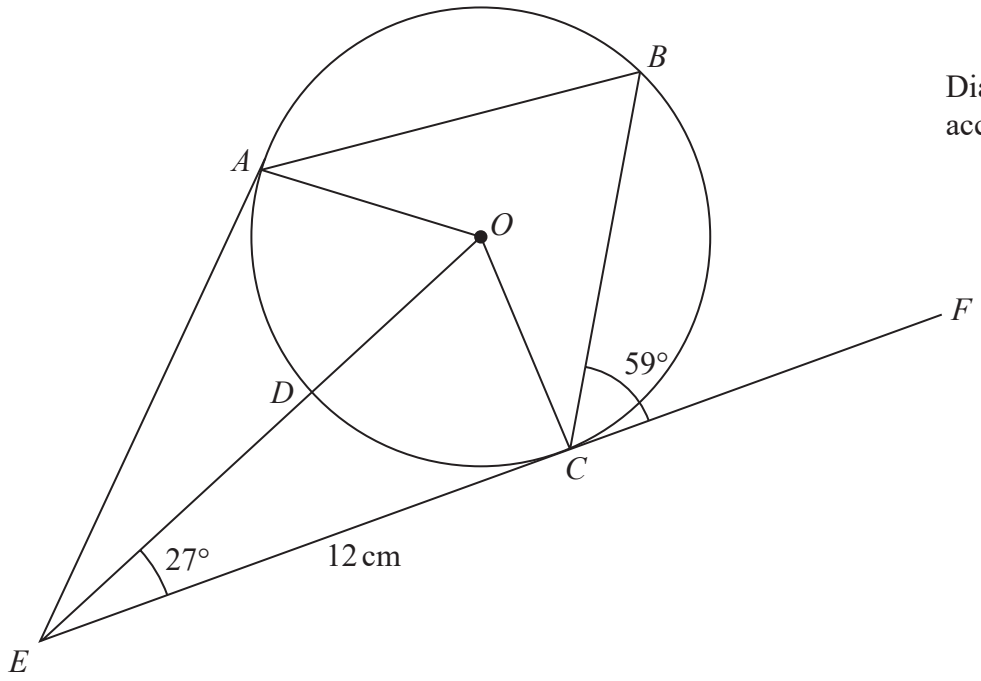

Diagram **NOT** accurately drawn

Figure 3

In Figure 3, $ABCD$ is a circle, centre O.

EA is the tangent to the circle at A.
ECF is the tangent to the circle at C.
EDO is a straight line.

$\angle OEC = 27°$ $\angle BCF = 59°$ $EC = 12$ cm

(a) Explain why $\angle OCE = 90°$

(1)

(b) Calculate the area, in cm^2 to 3 significant figures, of $\triangle OEC$.

(4)

(c) Giving reasons, calculate the size, in degrees, of $\angle ABC$.

(4)

(d) Calculate the size, in degrees, of $\angle ADC$.

(2)

(e) Calculate the size, in degrees, of $\angle BAO$.

(3)

DO NOT WRITE IN THIS AREA
DO NOT WRITE IN THIS AREA
DO NOT WRITE IN THIS AREA

www.dynamicpapers.com

Question 7 continued

DO NOT WRITE IN THIS AREA
DO NOT WRITE IN THIS AREA
DO NOT WRITE IN THIS AREA

www.dynamicpapers.com

Question 7 continued

DO NOT WRITE IN THIS AREA
DO NOT WRITE IN THIS AREA
DO NOT WRITE IN THIS AREA

www.dynamicpapers.com

Question 7 continued

(Total for Question 7 is 14 marks)

DO NOT WRITE IN THIS AREA
DO NOT WRITE IN THIS AREA
DO NOT WRITE IN THIS AREA

www.dynamicpapers.com

8 Solve the simultaneous equations

$$2x^2 + y^2 = 6$$

$$x - 2y = 3$$

Show clear algebraic working.

(6)

DO NOT WRITE IN THIS AREA
DO NOT WRITE IN THIS AREA
DO NOT WRITE IN THIS AREA

www.dynamicpapers.com

Question 8 continued

(Total for Question 8 is 6 marks)

DO NOT WRITE IN THIS AREA
DO NOT WRITE IN THIS AREA
DO NOT WRITE IN THIS AREA

www.dynamicpapers.com

9

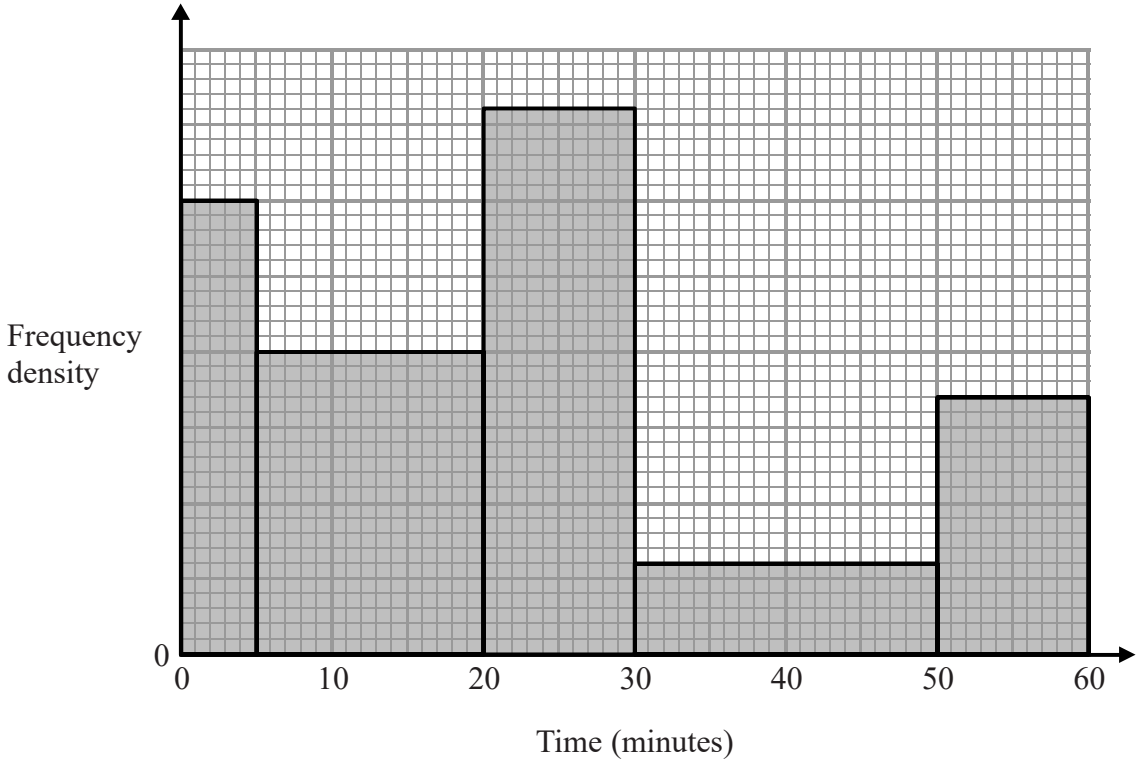

Figure 4

Figure 4 shows a histogram that gives information about the time, in minutes, each of 440 people spent in a supermarket.

Two people are chosen at random from the 440 people.

Calculate an estimate, to 3 significant figures, for the probability that both of these people spent more than 45 minutes in the supermarket.

(5)

DO NOT WRITE IN THIS AREA
DO NOT WRITE IN THIS AREA
DO NOT WRITE IN THIS AREA

www.dynamicpapers.com

Question 9 continued

(Total for Question 9 is 5 marks)

DO NOT WRITE IN THIS AREA
DO NOT WRITE IN THIS AREA
DO NOT WRITE IN THIS AREA

www.dynamicpapers.com

10

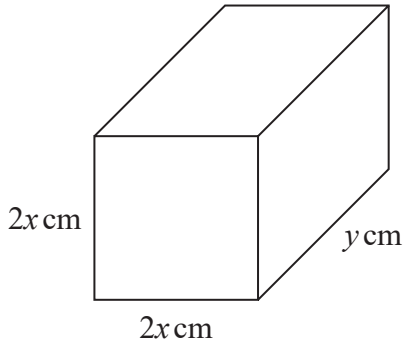

Diagram **NOT** accurately drawn

Figure 5

Figure 5 shows a cuboid with width $2x$ cm, height $2x$ cm and length y cm.

Given that the total surface area of the cuboid is 240 cm^2

(a) show that

$$x^2 + xy - 30 = 0$$

(2)

(b) Using calculus, calculate the exact value of x for which the volume of the cuboid is a maximum.

(5)

DO NOT WRITE IN THIS AREA
DO NOT WRITE IN THIS AREA
DO NOT WRITE IN THIS AREA

www.dynamicpapers.com

Question 10 continued

(Total for Question 10 is 7 marks)

DO NOT WRITE IN THIS AREA
DO NOT WRITE IN THIS AREA
DO NOT WRITE IN THIS AREA

www.dynamicpapers.com

11 The three functions, f, g and h, are defined as

$$f : x \mapsto x^2 + 3x - 4$$

$$g : x \mapsto 2x + 3$$

$$h : x \mapsto \frac{x}{3x - 25}$$

(a) Write down the value of x that must be excluded from any domain of h.

(1)

(b) Find f(6)

(1)

(c) Solve the equation $h(x) = 7$

(3)

(d) Find hg(4)

(2)

(e) Express the inverse function h^{-1} in the form $h^{-1} : x \mapsto \ldots$

(3)

(f) Solve the equation $fg(x) = 0$

(4)

DO NOT WRITE IN THIS AREA
DO NOT WRITE IN THIS AREA
DO NOT WRITE IN THIS AREA

www.dynamicpapers.com

Question 11 continued

DO NOT WRITE IN THIS AREA
DO NOT WRITE IN THIS AREA
DO NOT WRITE IN THIS AREA

www.dynamicpapers.com

Question 11 continued

DO NOT WRITE IN THIS AREA
DO NOT WRITE IN THIS AREA
DO NOT WRITE IN THIS AREA

(Total for Question 11 is 14 marks)

TOTAL FOR PAPER IS 100 MARKS