www.dynamicpapers.com

Please check the examination details below before entering your candidate information

Candidate surname	Other names

Centre Number | Candidate Number

Pearson Edexcel International GCSE

Time 2 hours 30 minutes

Paper reference **4MB1/02**

Mathematics B
PAPER 2



You must have: Ruler graduated in centimetres and millimetres, protractor, pair of compasses, pen, HB pencil, eraser, calculator. Tracing paper may be used.

Total Marks

Instructions

- Use **black** ink or ball-point pen.
- **Fill in the boxes** at the top of this page with your name, centre number and candidate number.
- Answer **all** questions.
- Answer the questions in the spaces provided – *there may be more space than you need.*
- **Calculators may be used.**

Information

- The total mark for this paper is 100.
- The marks for **each** question are shown in brackets – *use this as a guide as to how much time to spend on each question.*

Advice

- Read each question carefully before you start to answer it.
- Check your answers if you have time at the end.
- Without sufficient working, correct answers may be awarded no marks.

Turn over ▶

P69489A

©2022 Pearson Education Ltd.

Q:1/1/1/1/1/

P 6 9 4 8 9 A 0 1 3 2

Pearson

www.dynamicpapers.com

Answer all ELEVEN questions.

Write your answers in the spaces provided.

You must write down all the stages in your working.

1 The GDP per capita for a region is defined as follows

$$\text{GDP per capita} = \frac{\text{total GDP}}{\text{population}}$$

Complete the table below, giving each value to 2 significant figures.

Region	Total GDP	Population	GDP per capita
Grenada	1.23×10^9	112 000	
Hungary	1.61×10^{11}		16 500
World		7.67×10^9	11 400

(6)

DO NOT WRITE IN THIS AREA DO NOT WRITE IN THIS AREA DO NOT WRITE IN THIS AREA DO NOT WRITE IN THIS AREA DO NOT WRITE IN THIS AREA DO NOT WRITE IN THIS AREA

www.dynamicpapers.com

DO NOT WRITE IN THIS AREA
DO NOT WRITE IN THIS AREA
DO NOT WRITE IN THIS AREA
DO NOT WRITE IN THIS AREA
DO NOT WRITE IN THIS AREA
DO NOT WRITE IN THIS AREA

Question 1 continued

(Total for Question 1 is 6 marks)

www.dynamicpapers.com

2 $\mathscr{E}$ is the universal set and A, B and C are three sets.

$\mathscr{E} = \{ p, q, r, s, t \}$ $A = \{ q, r, s \}$ $B = \{ p, q, t \}$

(a) List the members of

(i) $A \cap B$

(ii) $A \cup B$

(iii) $A' \cap B$

(3)

Given that $A \cap C = \{r\}$

(b) write down all the possibilities for set C

(2)

One of the possibilities for set C is selected at random.

(c) Find the probability that this set C is such that $B \cap C = \varnothing$

(2)

DO NOT WRITE IN THIS AREA DO NOT WRITE IN THIS AREA DO NOT WRITE IN THIS AREA DO NOT WRITE IN THIS AREA DO NOT WRITE IN THIS AREA DO NOT WRITE IN THIS AREA

www.dynamicpapers.com

DO NOT WRITE IN THIS AREA
DO NOT WRITE IN THIS AREA
DO NOT WRITE IN THIS AREA
DO NOT WRITE IN THIS AREA
DO NOT WRITE IN THIS AREA
DO NOT WRITE IN THIS AREA

Question 2 continued

(Total for Question 2 is 7 marks)

www.dynamicpapers.com

3 Given that $2^x \times 4^y = 128$

(a) show that $x + 2y = 7$

(3)

Given that $\frac{8^x}{4^y} = 32$

(b) show that $3x - 2y = 5$

(2)

(c) Hence, or otherwise, solve the simultaneous equations

$$2^x \times 4^y = 128$$

$$\frac{8^x}{4^y} = 32$$

(3)

DO NOT WRITE IN THIS AREA
DO NOT WRITE IN THIS AREA
DO NOT WRITE IN THIS AREA
DO NOT WRITE IN THIS AREA
DO NOT WRITE IN THIS AREA
DO NOT WRITE IN THIS AREA

www.dynamicpapers.com

DO NOT WRITE IN THIS AREA
DO NOT WRITE IN THIS AREA
DO NOT WRITE IN THIS AREA
DO NOT WRITE IN THIS AREA
DO NOT WRITE IN THIS AREA
DO NOT WRITE IN THIS AREA

Question 3 continued

(Total for Question 3 is 8 marks)

www.dynamicpapers.com

4 Sophie conducted a survey on the time spent on the internet per day. There were 90 people in her survey. The results are shown in the table below.

Time (t minutes)	Frequency
$0 \leqslant t < 10$	5
$10 \leqslant t < 30$	7
$30 \leqslant t < 60$	15
$60 \leqslant t < 120$	36
$120 \leqslant t < 240$	19
$240 \leqslant t < 360$	8

(a) Write down the class interval that contains the median time spent on the internet per day.

(1)

(b) Calculate an estimate for the mean time spent on the internet per day.

(4)

Sophie drew a histogram for the information in the table.
In her histogram, the bar for the class interval $30 \leqslant t < 60$ is a square with sides of length 3 cm.

Given that the bar for the class interval $10 \leqslant t < 30$ is a rectangle of width w cm and of height h cm,

(c) find the value of w and the value of h

(3)

DO NOT WRITE IN THIS AREA
DO NOT WRITE IN THIS AREA
DO NOT WRITE IN THIS AREA
DO NOT WRITE IN THIS AREA
DO NOT WRITE IN THIS AREA
DO NOT WRITE IN THIS AREA

www.dynamicpapers.com

DO NOT WRITE IN THIS AREA
DO NOT WRITE IN THIS AREA
DO NOT WRITE IN THIS AREA
DO NOT WRITE IN THIS AREA
DO NOT WRITE IN THIS AREA
DO NOT WRITE IN THIS AREA

Question 4 continued

(Total for Question 4 is 8 marks)

www.dynamicpapers.com

5 A closed box is in the shape of a hollow cuboid.

The dimensions of the cuboid are 12 cm by 4.0 cm by 3.0 cm.
Each length is given to 2 significant figures.

A tin of paint contains enough paint to cover exactly 200 cm^2

(a) Determine if this tin of paint is definitely enough to cover the 6 outside faces of the closed box.

(4)

(b) Calculate the length of the longest straight rod that can definitely fit inside the box.
Give your answer to 3 significant figures.
Show your working clearly.

(4)

DO NOT WRITE IN THIS AREA
DO NOT WRITE IN THIS AREA
DO NOT WRITE IN THIS AREA
DO NOT WRITE IN THIS AREA

www.dynamicpapers.com

DO NOT WRITE IN THIS AREA
DO NOT WRITE IN THIS AREA
DO NOT WRITE IN THIS AREA
DO NOT WRITE IN THIS AREA
DO NOT WRITE IN THIS AREA
DO NOT WRITE IN THIS AREA

Question 5 continued

(Total for Question 5 is 8 marks)

www.dynamicpapers.com

6 A, P and B are three points on horizontal ground.

A is 1 km due south of P

PQ is a vertical tower.
The angle of elevation of Q from A is 16.9°

(a) Show that the height of the tower, in metres to 3 significant figures, is 304 m.

(2)

B is 2 km due east of P

BC is a vertical radio mast.
The angle of elevation of Q from C, the top of the radio mast, is 8.2°

(b) Calculate the size, in degrees to one decimal place, of the angle of elevation of C from A

(5)

DO NOT WRITE IN THIS AREA
DO NOT WRITE IN THIS AREA
DO NOT WRITE IN THIS AREA
DO NOT WRITE IN THIS AREA
DO NOT WRITE IN THIS AREA
DO NOT WRITE IN THIS AREA

www.dynamicpapers.com

DO NOT WRITE IN THIS AREA
DO NOT WRITE IN THIS AREA
DO NOT WRITE IN THIS AREA
DO NOT WRITE IN THIS AREA
DO NOT WRITE IN THIS AREA
DO NOT WRITE IN THIS AREA

Question 6 continued

(Total for Question 6 is 7 marks)

www.dynamicpapers.com

7

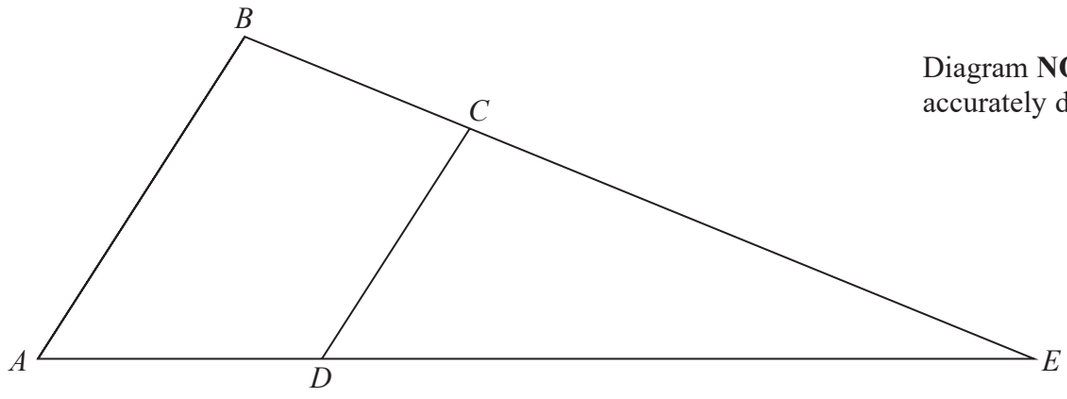

Diagram **NOT** accurately drawn

Figure 1

Figure 1 shows quadrilateral $ABCD$ such that $\overrightarrow{AB} = \mathbf{a}$ and $\overrightarrow{AD} = \mathbf{b}$

E is the point such that ADE and BCE are straight lines.

Given that $\overrightarrow{BC} = \mathbf{b} - \frac{1}{3}\mathbf{a}$

(a) show that AB is parallel to DC

(2)

Given also that λ is a scalar such that $\overrightarrow{BE} = \lambda\mathbf{b} - \mathbf{a}$

(b) find the value of λ

(2)

The area of triangle ABE is x square units.

Given that the area of quadrilateral $ABCD$ is P square units,

(c) find an expression for P in terms of x

(3)

DO NOT WRITE IN THIS AREA DO NOT WRITE IN THIS AREA DO NOT WRITE IN THIS AREA DO NOT WRITE IN THIS AREA DO NOT WRITE IN THIS AREA DO NOT WRITE IN THIS AREA

www.dynamicpapers.com

DO NOT WRITE IN THIS AREA
DO NOT WRITE IN THIS AREA
DO NOT WRITE IN THIS AREA
DO NOT WRITE IN THIS AREA
DO NOT WRITE IN THIS AREA
DO NOT WRITE IN THIS AREA

Question 7 continued

www.dynamicpapers.com

Question 7 continued

DO NOT WRITE IN THIS AREA
DO NOT WRITE IN THIS AREA
DO NOT WRITE IN THIS AREA
DO NOT WRITE IN THIS AREA
DO NOT WRITE IN THIS AREA
DO NOT WRITE IN THIS AREA

www.dynamicpapers.com

DO NOT WRITE IN THIS AREA
DO NOT WRITE IN THIS AREA
DO NOT WRITE IN THIS AREA
DO NOT WRITE IN THIS AREA
DO NOT WRITE IN THIS AREA
DO NOT WRITE IN THIS AREA

Question 7 continued

(Total for Question 7 is 7 marks)

www.dynamicpapers.com

8

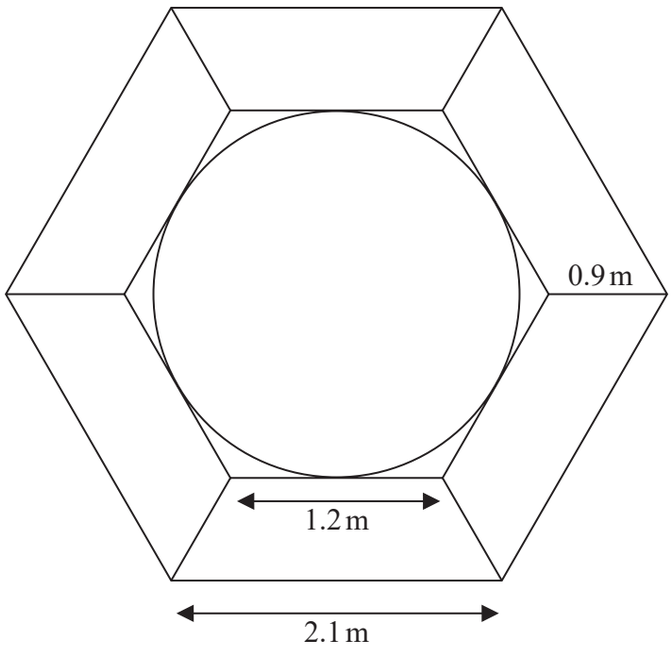

Diagram **NOT** accurately drawn

Figure 2

Figure 2 shows the design for a garden feature.

In the middle of the feature is a circular pond.
The pond is surrounded by 6 identical flower beds.
Each flower bed is in the shape of an isosceles trapezium.

(a) Calculate the area, in m^2 to 3 significant figures, of one of the flower beds.

(3)

Each flower bed needs to be filled with compost to a depth of 10 cm.
The compost is sold in bags containing 50 litres of compost.

(b) Show that 16 bags of compost will be needed to fill all six flower beds to a depth of 10 cm.
Show your working clearly.

(4)

(c) Find the area of the circular pond.
Give your answer in m^2 to 3 significant figures.

(4)

DO NOT WRITE IN THIS AREA
DO NOT WRITE IN THIS AREA
DO NOT WRITE IN THIS AREA
DO NOT WRITE IN THIS AREA
DO NOT WRITE IN THIS AREA
DO NOT WRITE IN THIS AREA

www.dynamicpapers.com

DO NOT WRITE IN THIS AREA
DO NOT WRITE IN THIS AREA
DO NOT WRITE IN THIS AREA
DO NOT WRITE IN THIS AREA
DO NOT WRITE IN THIS AREA
DO NOT WRITE IN THIS AREA

Question 8 continued

Area of trapezium $= \frac{1}{2}(a + b)h$

(Total for Question 8 is 11 marks)

www.dynamicpapers.com

9 [*In this question the coordinates of the points are given in centimetres*]

The points with coordinates (1, 1), (2, 4), (4, 6) and (3, 3) are the vertices of quadrilateral *A*

(a) On the grid opposite, draw and label quadrilateral *A*

(1)

Quadrilateral *A* is transformed to quadrilateral *B* by a rotation of 90° anticlockwise about the origin, *O*

(b) On the grid opposite, draw and label quadrilateral *B*

(2)

Quadrilateral *B* is transformed to quadrilateral *C* under the transformation with matrix **M** where

$$\mathbf{M} = \begin{pmatrix} 1 & 3 \\ 1 & 1 \end{pmatrix}$$

(c) On the grid opposite, draw and label quadrilateral *C*

(3)

(d) Calculate the determinant of **M**

(1)

(e) Calculate the area of quadrilateral *A*

(2)

$$\left[\textbf{Determinant of matrix } \begin{pmatrix} a & b \\ c & d \end{pmatrix} = ad - bc \right]$$

DO NOT WRITE IN THIS AREA DO NOT WRITE IN THIS AREA DO NOT WRITE IN THIS AREA DO NOT WRITE IN THIS AREA DO NOT WRITE IN THIS AREA DO NOT WRITE IN THIS AREA

www.dynamicpapers.com

DO NOT WRITE IN THIS AREA
DO NOT WRITE IN THIS AREA
DO NOT WRITE IN THIS AREA
DO NOT WRITE IN THIS AREA
DO NOT WRITE IN THIS AREA
DO NOT WRITE IN THIS AREA

Question 9 continued

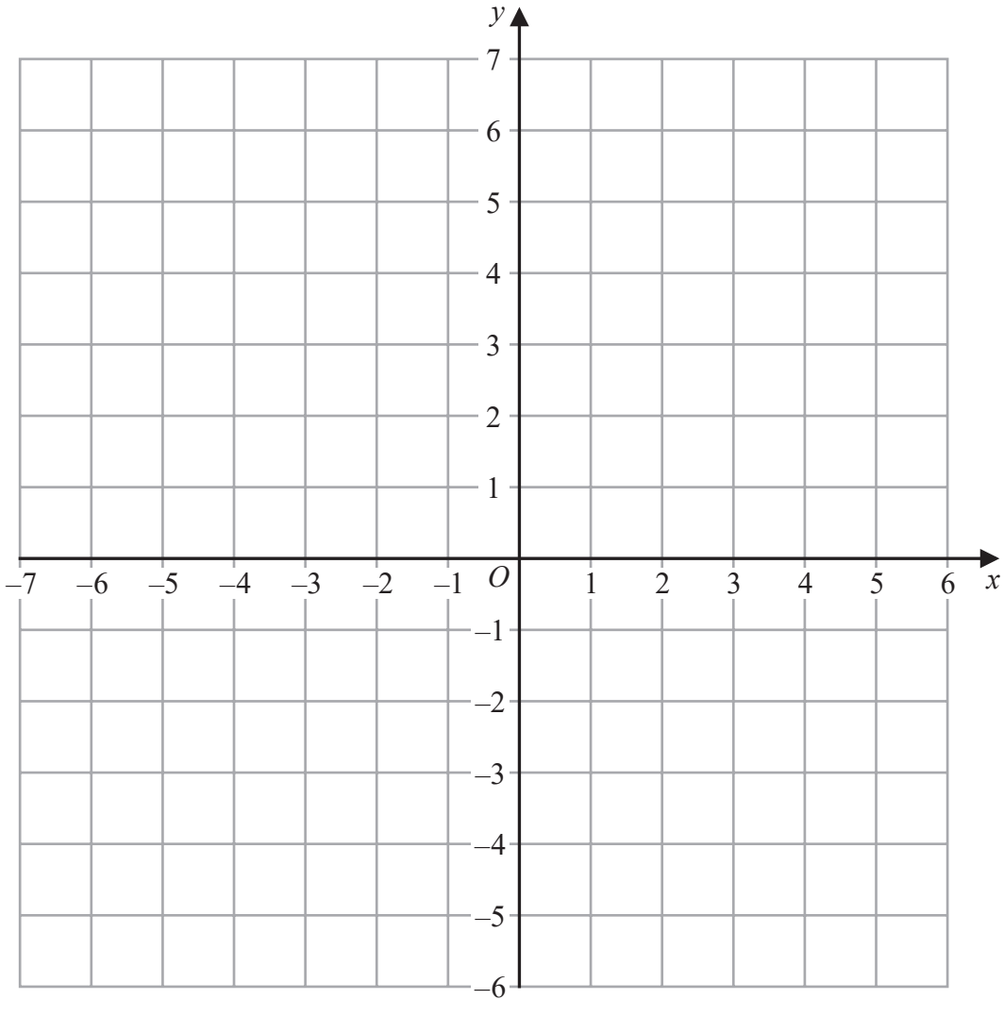

Turn over for a spare grid if you need to redraw your shapes.

www.dynamicpapers.com

Question 9 continued

DO NOT WRITE IN THIS AREA
DO NOT WRITE IN THIS AREA
DO NOT WRITE IN THIS AREA
DO NOT WRITE IN THIS AREA
DO NOT WRITE IN THIS AREA
DO NOT WRITE IN THIS AREA

www.dynamicpapers.com

DO NOT WRITE IN THIS AREA
DO NOT WRITE IN THIS AREA
DO NOT WRITE IN THIS AREA
DO NOT WRITE IN THIS AREA
DO NOT WRITE IN THIS AREA
DO NOT WRITE IN THIS AREA

Question 9 continued

Only use this grid if you need to redraw your shapes.

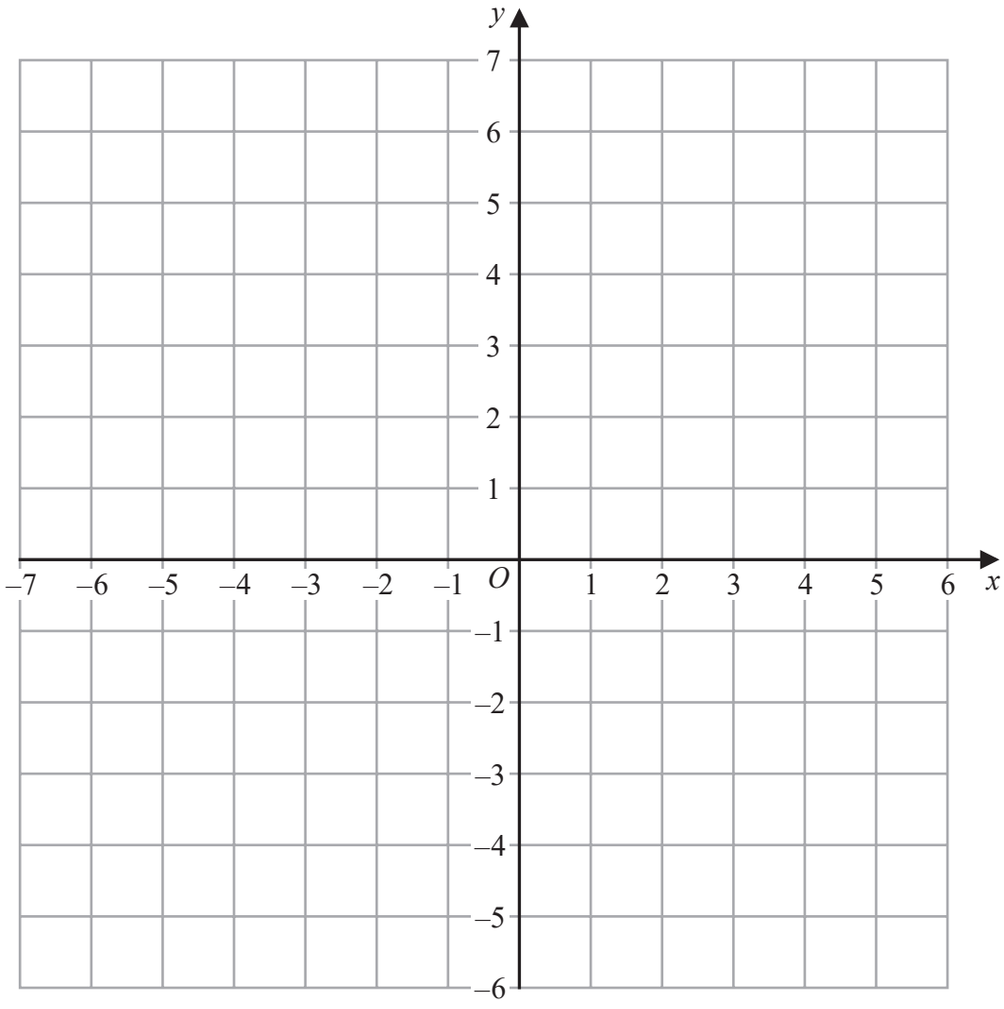

(Total for Question 9 is 9 marks)

www.dynamicpapers.com

10

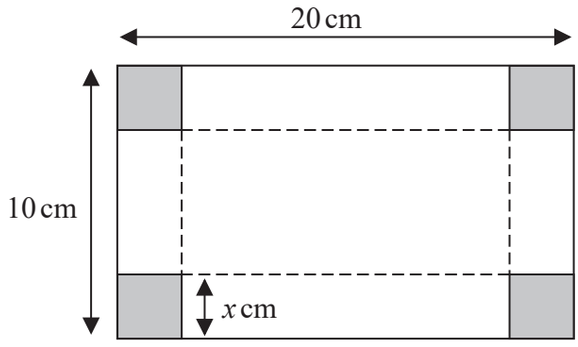

Diagrams **NOT** accurately drawn

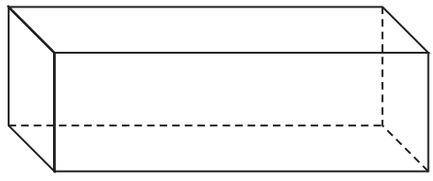

Figure 3 **Figure 4**

Figure 3 shows a rectangle with dimensions 20 cm by 10 cm from which a square with sides of length x cm is removed from each of the corners.
The shape in Figure 3 is then folded along the dotted lines to form a box, without a lid, in the shape of a cuboid, shown in Figure 4

The volume of the box is V cm^3

(a) Show that $V = 4x^3 - 60x^2 + 200x$

(2)

(b) Find, to 3 significant figures, the value of x such that $\frac{dV}{dx} = 0$

(4)

$$\left[\text{Solutions of } ax^2 + bx + c = 0 \text{ are } x = \frac{-b \pm \sqrt{b^2 - 4ac}}{2a}\right]$$

Question 10 parts (c), (d), (e) and (f) continue on page 26

DO NOT WRITE IN THIS AREA
DO NOT WRITE IN THIS AREA
DO NOT WRITE IN THIS AREA
DO NOT WRITE IN THIS AREA
DO NOT WRITE IN THIS AREA
DO NOT WRITE IN THIS AREA

www.dynamicpapers.com

DO NOT WRITE IN THIS AREA
DO NOT WRITE IN THIS AREA
DO NOT WRITE IN THIS AREA
DO NOT WRITE IN THIS AREA
DO NOT WRITE IN THIS AREA
DO NOT WRITE IN THIS AREA

Question 10 continued

www.dynamicpapers.com

Question 10 continued

(c) Complete the following table of values for $V = 4x^3 - 60x^2 + 200x$

x	0	1	1.5	2.5	3	3.5	4	5
V	0	144	178.5	187.5		136.5		0

(2)

(d) On the grid opposite, plot the points from your completed table and, using your answer to part (b), join them to form a smooth curve.

(2)

(e) By drawing on the grid a tangent to the curve, find an estimate of the gradient of the curve at the point where $x = 1.5$

(2)

Starting with a square of side 15 cm and removing a square with sides of length x cm from each corner, a second box without a lid is formed by folding as in part (a).

The volume of this box is B cm^3 where $B = 4x^3 - 60x^2 + 225x$

Given that $B = 200$

(f) find, by drawing a suitable straight line on the grid, estimates, to one decimal place, of the possible values of x

(3)

DO NOT WRITE IN THIS AREA DO NOT WRITE IN THIS AREA DO NOT WRITE IN THIS AREA DO NOT WRITE IN THIS AREA DO NOT WRITE IN THIS AREA DO NOT WRITE IN THIS AREA

www.dynamicpapers.com

DO NOT WRITE IN THIS AREA
DO NOT WRITE IN THIS AREA
DO NOT WRITE IN THIS AREA
DO NOT WRITE IN THIS AREA
DO NOT WRITE IN THIS AREA
DO NOT WRITE IN THIS AREA

Question 10 continued

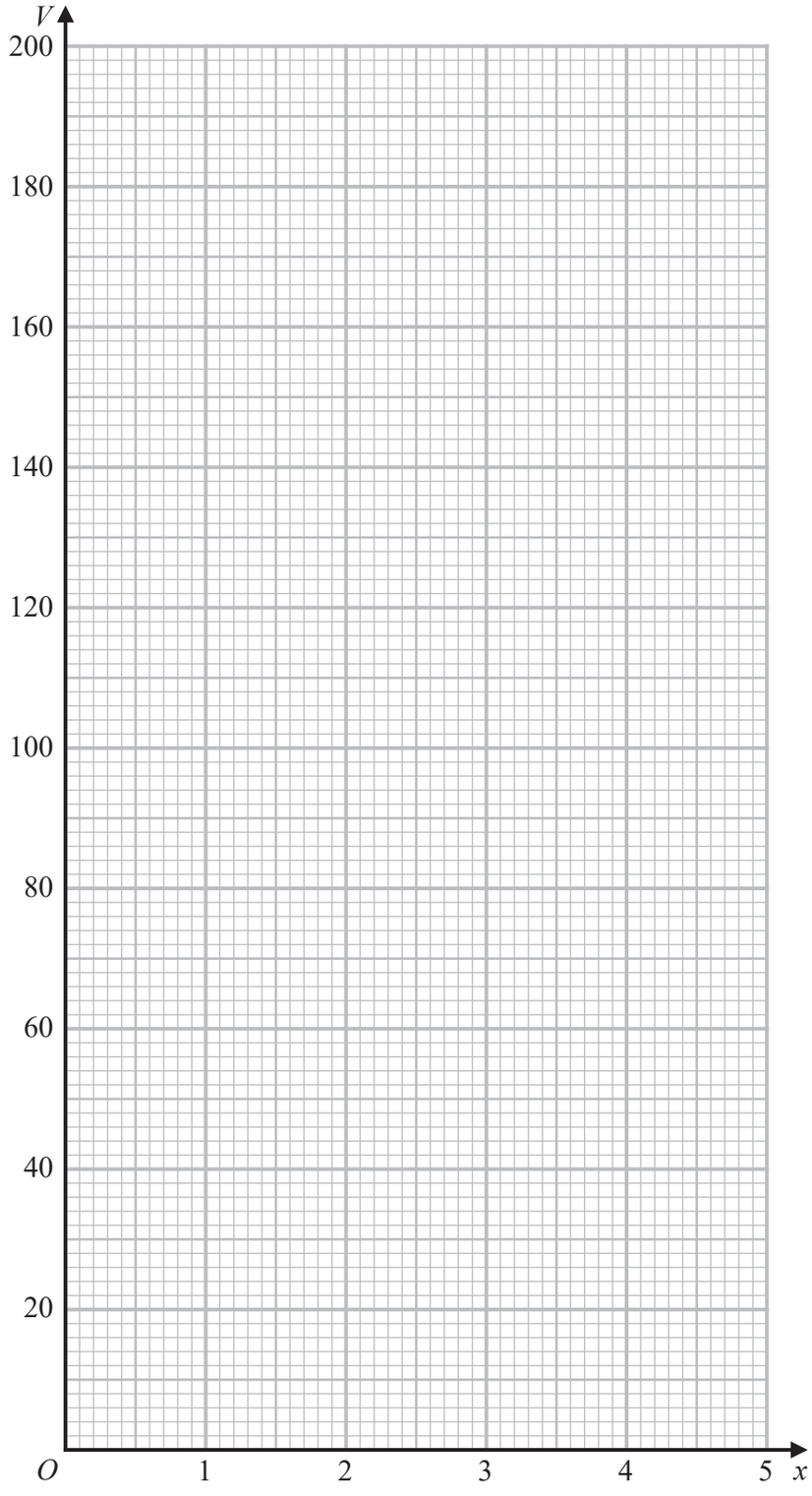

Turn over for a spare grid if you need to redraw your curve.

www.dynamicpapers.com

Question 10 continued

DO NOT WRITE IN THIS AREA
DO NOT WRITE IN THIS AREA
DO NOT WRITE IN THIS AREA
DO NOT WRITE IN THIS AREA
DO NOT WRITE IN THIS AREA
DO NOT WRITE IN THIS AREA

www.dynamicpapers.com

DO NOT WRITE IN THIS AREA
DO NOT WRITE IN THIS AREA
DO NOT WRITE IN THIS AREA
DO NOT WRITE IN THIS AREA
DO NOT WRITE IN THIS AREA
DO NOT WRITE IN THIS AREA

Question 10 continued

Only use this grid if you need to redraw your curve.

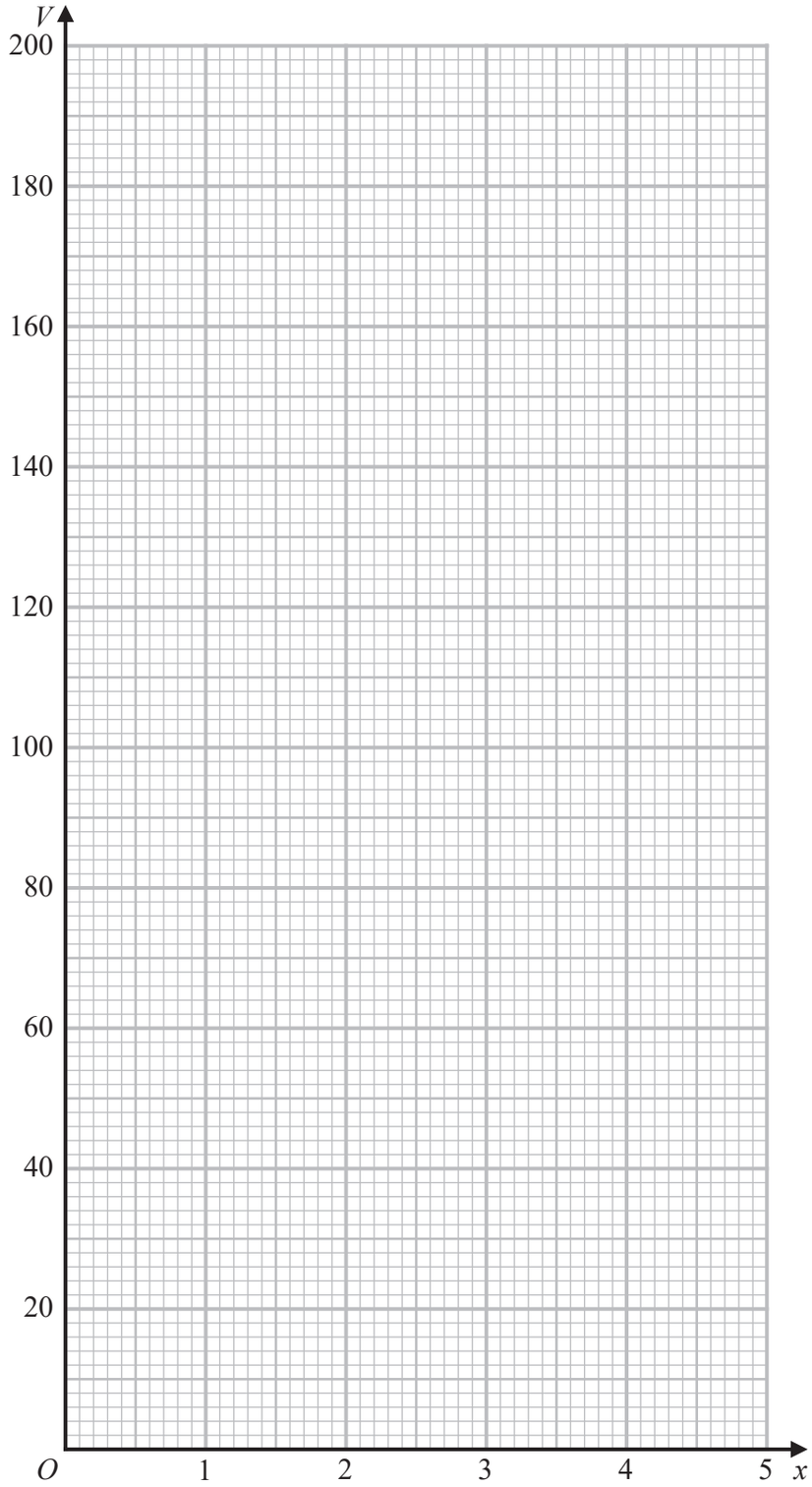

(Total for Question 10 is 15 marks)

www.dynamicpapers.com

11 The function f is defined as

$$f: x \mapsto \frac{3x+1}{x-1}$$

(a) Find f(3)

(2)

(b) State the value of x that must be excluded from any domain of the function f

(1)

(c) Find the inverse of the function f
Give your answer in its simplest form.

(4)

The function g is such that

$$fg(x) = \frac{x-1}{3x+1}$$

(d) Find the value of a such that $gf(a) = fg(a)$

(7)

DO NOT WRITE IN THIS AREA
DO NOT WRITE IN THIS AREA
DO NOT WRITE IN THIS AREA
DO NOT WRITE IN THIS AREA
DO NOT WRITE IN THIS AREA
DO NOT WRITE IN THIS AREA

www.dynamicpapers.com

DO NOT WRITE IN THIS AREA
DO NOT WRITE IN THIS AREA
DO NOT WRITE IN THIS AREA
DO NOT WRITE IN THIS AREA
DO NOT WRITE IN THIS AREA
DO NOT WRITE IN THIS AREA

Question 11 continued

www.dynamicpapers.com

Question 11 continued

(Total for Question 11 is 14 marks)

TOTAL FOR PAPER IS 100 MARKS

DO NOT WRITE IN THIS AREA
DO NOT WRITE IN THIS AREA
DO NOT WRITE IN THIS AREA