www.dynamicpapers.com

Please check the examination details below before entering your candidate information

Candidate surname	Other names

Pearson Edexcel International GCSE

Centre Number | | | | | |

Candidate Number | | | | |

Tuesday 7 January 2020

Morning (Time: 1 hour 30 minutes) | Paper Reference **4MB1/01**

Mathematics B

Paper 1



You must have: Ruler graduated in centimetres and millimetres, protractor, compasses, pen, HB pencil, eraser, calculator. Tracing paper may be used.

Total Marks

Instructions

- Use **black** ink or ball-point pen.
- **Fill in the boxes** at the top of this page with your name, centre number and candidate number.
- Answer **all** questions.
- Answer the questions in the spaces provided
  – *there may be more space than you need.*
- **Calculators may be used**.

Information

- The total mark for this paper is 100.
- The marks for **each** question are shown in brackets
  – *use this as a guide as to how much time to spend on each question.*

Advice

- Read each question carefully before you start to answer it.
- Check your answers if you have time at the end.
- Without sufficient working, correct answers may be awarded no marks.

Turn over ▶

P59772A

©2020 Pearson Education Ltd.

1/1/1/1/

P 5 9 7 7 2 A 0 1 2 4

Pearson

www.dynamicpapers.com

Answer ALL TWENTY SEVEN questions.

Write your answers in the spaces provided.

You must write down all the stages in your working.

1 Write 0.000 315 in standard form.

.....

(Total for Question 1 is 1 mark)

2 The bearing of village *A* from village *B* is 124°

Find the bearing of village *B* from village *A*.

.....°

(Total for Question 2 is 2 marks)

DO NOT WRITE IN THIS AREA
DO NOT WRITE IN THIS AREA
DO NOT WRITE IN THIS AREA

www.dynamicpapers.com

3

Diagram **NOT** accurately drawn

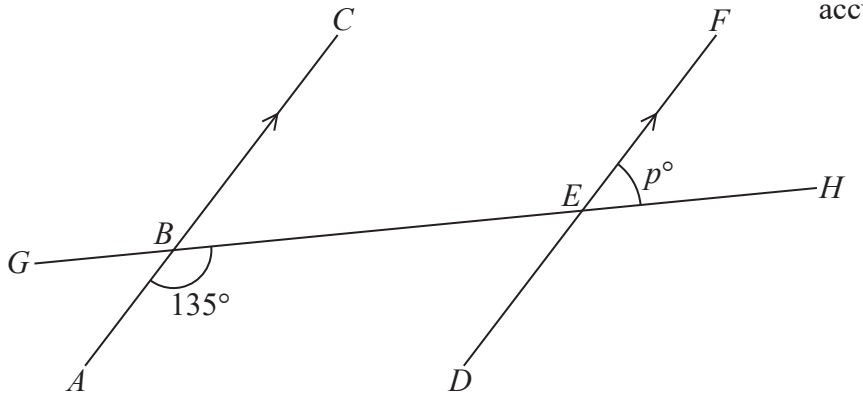

ABC and *DEF* are parallel straight lines and *GBEH* is a straight line.

$\angle ABE = 135°$ and $\angle FEH = p°$

Find the value of p.

$p =$ .....

(Total for Question 3 is 2 marks)

4 Without using a calculator and showing all your working, work out

$$1\frac{7}{8} \times 2\frac{3}{5}$$

Give your answer as a mixed number in its simplest form.

.....

(Total for Question 4 is 2 marks)

DO NOT WRITE IN THIS AREA
DO NOT WRITE IN THIS AREA
DO NOT WRITE IN THIS AREA

www.dynamicpapers.com

5 $\mathscr{E}$ = {even numbers between 1 and 29}
A = {prime numbers}
B = {factors of 24}

List the elements of the set

(a) B'

.....

(1)

(b) $A \cap B$

.....

(1)

(Total for Question 5 is 2 marks)

6 Here are the twelve most recent batting scores of a cricketer.

23 45 3 56 23 18 78 56 6 87 11 26

Find the median of these twelve scores.

.....

(Total for Question 6 is 2 marks)

DO NOT WRITE IN THIS AREA
DO NOT WRITE IN THIS AREA
DO NOT WRITE IN THIS AREA

www.dynamicpapers.com

7 The nth term of a sequence is given by $2 - 5n$

Write down the 3rd, 4th and 5th terms of the sequence.

..... , ... , ...

(Total for Question 7 is 2 marks)

8 Express 42 minutes as a percentage of 5 hours.

.....%

(Total for Question 8 is 3 marks)

9 Here is a number line.

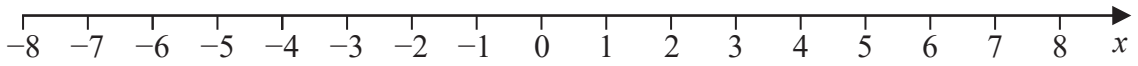

(a) Show on the number line the inequality $-3 \leqslant x < 4$

(2)

(b) Write down the integer values of x for which $-3 \leqslant x < 4$

.....

(1)

(Total for Question 9 is 3 marks)

DO NOT WRITE IN THIS AREA
DO NOT WRITE IN THIS AREA
DO NOT WRITE IN THIS AREA

www.dynamicpapers.com

10 $\mathbf{A} = \begin{pmatrix} 2 & -3 \\ 4 & 1 \end{pmatrix}$ $\mathbf{B} = \begin{pmatrix} 5 & 0 \\ 4 & -2 \end{pmatrix}$

Calculate

(a) $\mathbf{A} + \mathbf{B}$

$\begin{pmatrix} & \\ & \end{pmatrix}$

(1)

(b) $2\mathbf{A} - 4\mathbf{B}$

$\begin{pmatrix} & \\ & \end{pmatrix}$

(2)

(Total for Question 10 is 3 marks)

DO NOT WRITE IN THIS AREA
DO NOT WRITE IN THIS AREA
DO NOT WRITE IN THIS AREA

www.dynamicpapers.com

DO NOT WRITE IN THIS AREA
DO NOT WRITE IN THIS AREA
DO NOT WRITE IN THIS AREA

11 Express as a single fraction in its simplest form

$$\frac{5}{3-2x} - \frac{2}{2+5x}$$

.....

(Total for Question 11 is 3 marks)

www.dynamicpapers.com

12 Given that, for all values of x,

$$4x^3 - 8x^2 - 12x + 11 = (2x + k)Q(x) + 11$$

where $Q(x)$ is a quadratic expression in x,

find the positive value of k.

$k =$ .....

(Total for Question 12 is 3 marks)

DO NOT WRITE IN THIS AREA
DO NOT WRITE IN THIS AREA
DO NOT WRITE IN THIS AREA

www.dynamicpapers.com

DO NOT WRITE IN THIS AREA

13 Simplify $\dfrac{(3x^2y^3)^3}{9xy^2}$

.....

(Total for Question 13 is 3 marks)

14 Solve the simultaneous equations

$$3x + 2y = 8$$

$$-4x + 9y = 22$$

Show clear algebraic working.

$x =$ .....

$y =$ .....

(Total for Question 14 is 4 marks)

www.dynamicpapers.com

15

Diagram **NOT** accurately drawn

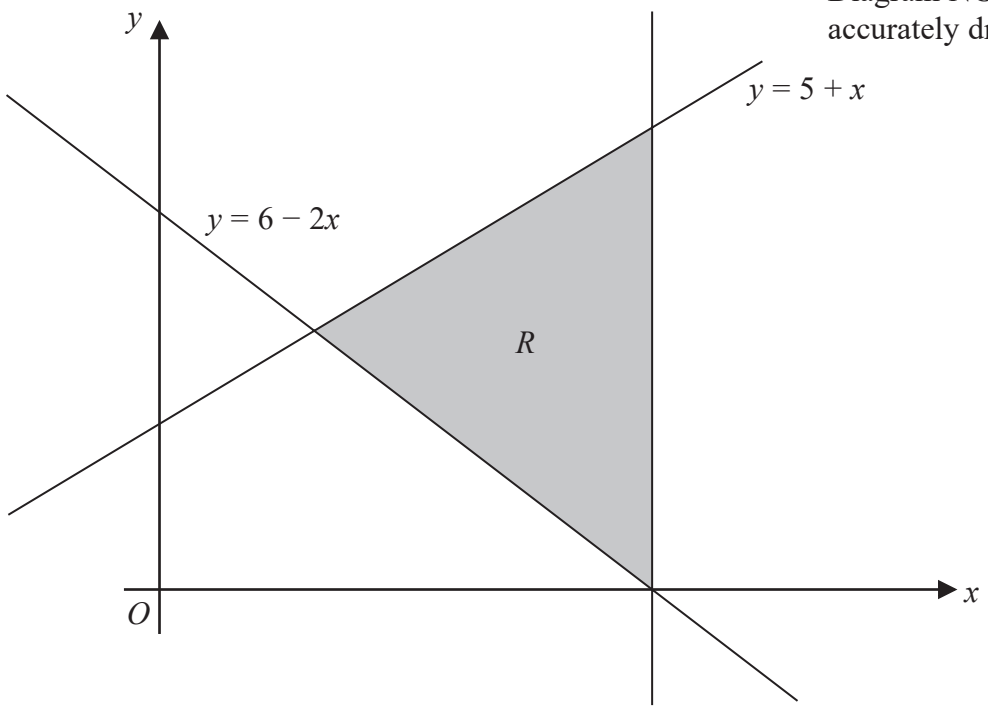

The diagram shows the shaded region R, which is bounded by three straight lines, one of which is parallel to the y-axis.
One vertex of R lies on the x-axis.

Find three inequalities that define R.

.....

.....

.....

(Total for Question 15 is 4 marks)

DO NOT WRITE IN THIS AREA
DO NOT WRITE IN THIS AREA
DO NOT WRITE IN THIS AREA

www.dynamicpapers.com

DO NOT WRITE IN THIS AREA
DO NOT WRITE IN THIS AREA
DO NOT WRITE IN THIS AREA

16 A model of a ship is made to a scale of 3 : 400

The surface area of the model is 7200 cm^2

Calculate, in m^2, the surface area of the ship.

..... m^2

(Total for Question 16 is 4 marks)

www.dynamicpapers.com

17

Diagram **NOT** accurately drawn

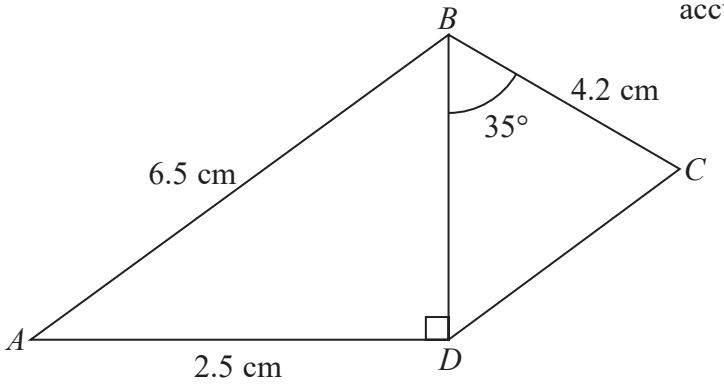

The diagram shows $\triangle ABD$ and $\triangle BCD$ such that

$AB = 6.5$ cm, $AD = 2.5$ cm, $BC = 4.2$ cm, $\angle CBD = 35°$ and $\angle ADB = 90°$

Calculate the area, in cm^2 to 3 significant figures, of the quadrilateral $ABCD$.

..... cm^2

(Total for Question 17 is 4 marks)

DO NOT WRITE IN THIS AREA
DO NOT WRITE IN THIS AREA
DO NOT WRITE IN THIS AREA

www.dynamicpapers.com

DO NOT WRITE IN THIS AREA
DO NOT WRITE IN THIS AREA
DO NOT WRITE IN THIS AREA

18 $\mathbf{p} = \begin{pmatrix} x \\ 2x - 1 \end{pmatrix}$ $\mathbf{q} = \begin{pmatrix} -9 \\ 5 \end{pmatrix}$

The vectors $\mathbf{p}$ and $\mathbf{q}$ are such that $|\mathbf{p}| = |\mathbf{q}|$

Given that $x < 0$

find the value of x.

$x =$ .....

(Total for Question 18 is 4 marks)

www.dynamicpapers.com

19

Diagram **NOT** accurately drawn

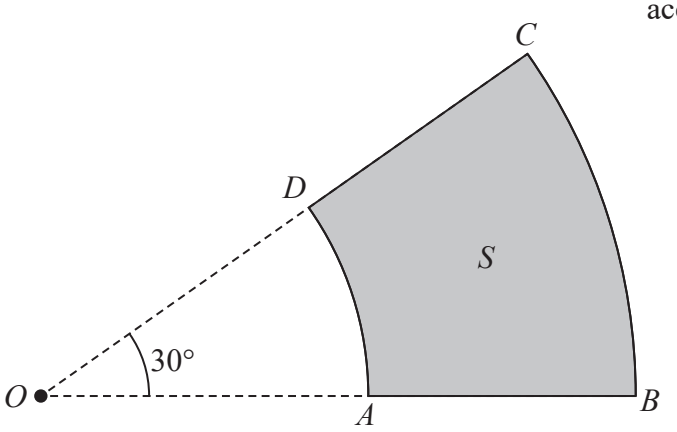

BOC is a sector of a circle, centre *O*, with $\angle BOC = 30°$
The sector *AOD* of the circle, centre *O*, such that *ODC* and *OAB* are straight lines, is removed from the sector *BOC* to form the region *S*, shown shaded in the diagram.

Given that $OA = AB$ and that the perimeter of *S* is 10 m,

calculate, giving your answer in terms of π, the length, in m, of *AB*.

..... m

(Total for Question 19 is 4 marks)

DO NOT WRITE IN THIS AREA
DO NOT WRITE IN THIS AREA
DO NOT WRITE IN THIS AREA

www.dynamicpapers.com

DO NOT WRITE IN THIS AREA
DO NOT WRITE IN THIS AREA
DO NOT WRITE IN THIS AREA

20 The temperature (T °C) at midday in a city was recorded each day for 50 days.

The table shows information about these temperatures.

Temperature (T °C)	Number of days
$5 < T \leqslant 8$	3
$8 < T \leqslant 11$	12
$11 < T \leqslant 14$	12
$14 < T \leqslant 17$	16
$17 < T \leqslant 20$	6
$20 < T \leqslant 23$	1

(a) Write down the modal class.

.....

(1)

(b) Calculate an estimate, to the nearest °C, of the mean temperature at midday in this city during these 50 days.

..... °C

(4)

(Total for Question 20 is 5 marks)

www.dynamicpapers.com

21 The functions f and g are defined for all values of x by

$$f(x) = 3x - 5 \qquad g(x) = 2x^2 + 1$$

(a) Write down the range of g

.....

(1)

(b) Solve the equation $f(x) = gf(2)$

$x =$ .....

(4)

(Total for Question 21 is 5 marks)

DO NOT WRITE IN THIS AREA
DO NOT WRITE IN THIS AREA
DO NOT WRITE IN THIS AREA

www.dynamicpapers.com

22 $x = \sqrt{\dfrac{a-b}{c}}$

a = 8.45 correct to 2 decimal places.
b = 1.93 correct to 2 decimal places.
c = 3.415 correct to 3 decimal places.

The upper bound of x and the lower bound of x are the same correct to n decimal places.

Calculate the value of x correct to n decimal places, for the largest integer n.

You must show all your working and give a reason for your final answer.

$x =$ .....

(Total for Question 22 is 5 marks)

DO NOT WRITE IN THIS AREA
DO NOT WRITE IN THIS AREA
DO NOT WRITE IN THIS AREA

www.dynamicpapers.com

23 (a) Factorise completely $10a - 25ab$

.....

(2)

(b) Factorise $x^2 - 3x - 10$

.....

(2)

(c) Factorise completely $50x^2 - 72y^2$

.....

(2)

(Total for Question 23 is 6 marks)

DO NOT WRITE IN THIS AREA
DO NOT WRITE IN THIS AREA
DO NOT WRITE IN THIS AREA

www.dynamicpapers.com

DO NOT WRITE IN THIS AREA
DO NOT WRITE IN THIS AREA
DO NOT WRITE IN THIS AREA

24 The equation of a curve C is $y = \dfrac{(2x - 3)(kx + 5)}{x}$, where k is a constant.

The point A on C is a stationary point.

Given that the x coordinate of A is $\dfrac{1}{2}$

find the value of k.

$k =$ .....

(Total for Question 24 is 6 marks)

www.dynamicpapers.com

25

Diagram **NOT** accurately drawn

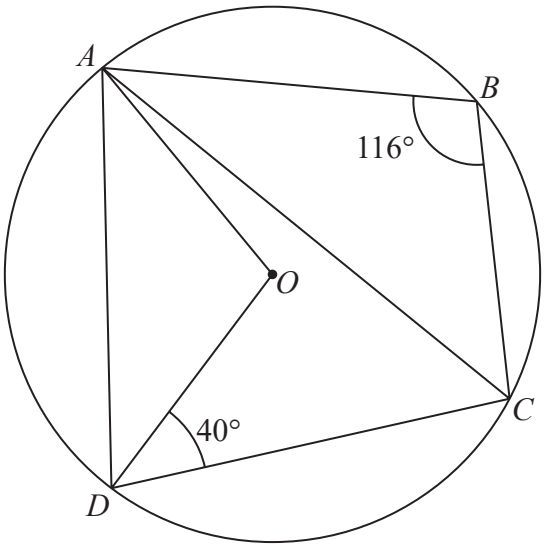

In the diagram, A, B, C and D are points on a circle, centre O.

$\angle ABC = 116°$ and $\angle ODC = 40°$

(a) Calculate, giving your reasons, the size in degrees of $\angle OAD$.

$\angle OAD =$ ..... °

(4)

DO NOT WRITE IN THIS AREA
DO NOT WRITE IN THIS AREA
DO NOT WRITE IN THIS AREA

www.dynamicpapers.com

(b) Calculate, giving your reasons, the size in degrees of $\angle ACD$.

$\angle ACD =$ ..... °

(3)

(Total for Question 25 is 7 marks)

DO NOT WRITE IN THIS AREA
DO NOT WRITE IN THIS AREA
DO NOT WRITE IN THIS AREA

www.dynamicpapers.com

26 30 people travelled from London to Manchester for a conference.
Of these people

15 travelled by train

9 travelled by plane

some travelled by both train and plane

12 did not travel by either train or plane

Three people are chosen at random from those who travelled by plane.

Find the probability that exactly two of these people also travelled by train.

.....

(Total for Question 26 is 6 marks)

DO NOT WRITE IN THIS AREA
DO NOT WRITE IN THIS AREA
DO NOT WRITE IN THIS AREA

www.dynamicpapers.com

27

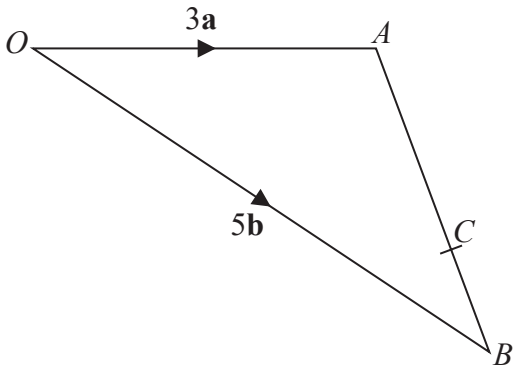

Diagram **NOT** accurately drawn

× *D*

The diagram shows $\triangle OAB$ and a point D which is outside the triangle.

The point C lies on AB such that $AC = 3CB$

The point D is such that $\overrightarrow{BD} = \frac{7}{4}\mathbf{a} + \frac{15}{4}\mathbf{b}$ where $\overrightarrow{OA} = 3\mathbf{a}$ and $\overrightarrow{OB} = 5\mathbf{b}$

Find the ratio $OC : CD$

.....

(Total for Question 27 is 5 marks)

TOTAL FOR PAPER IS 100 MARKS

DO NOT WRITE IN THIS AREA
DO NOT WRITE IN THIS AREA
DO NOT WRITE IN THIS AREA

www.dynamicpapers.com

DO NOT WRITE IN THIS AREA

DO NOT WRITE IN THIS AREA

DO NOT WRITE IN THIS AREA

BLANK PAGE