www.dynamicpapers.com

Please check the examination details below before entering your candidate information

Candidate surname	Other names

Pearson Edexcel
International Advanced Level

Centre Number | | | | | |

Candidate Number | | | | |

Friday 5 June 2020

Afternoon (Time: 1 hour 20 minutes) | Paper Reference **WPH16/01**

Physics

International Advanced Level
Unit 6: Practical Skills in Physics II

You must have:
Scientific calculator, Ruler

Total Marks

Instructions

- Use **black** ink or ball-point pen.
- **Fill in the boxes** at the top of this page with your name, centre number and candidate number.
- Answer **all** questions.
- Answer the questions in the spaces provided
  – *there may be more space than you need.*
- **Show all your working out in calculations and include units where appropriate.**

Information

- The total mark for this paper is 50.
- The marks for **each** question are shown in brackets
  – *use this as a guide as to how much time to spend on each question.*
- The list of data, formulae and relationships is printed at the end of this booklet.

Advice

- Read each question carefully before you start to answer it.
- Try to answer every question.
- Check your answers if you have time at the end.

www.dynamicpapers.com

Answer ALL questions.

1 A student investigated the conservation of momentum using the apparatus as shown.

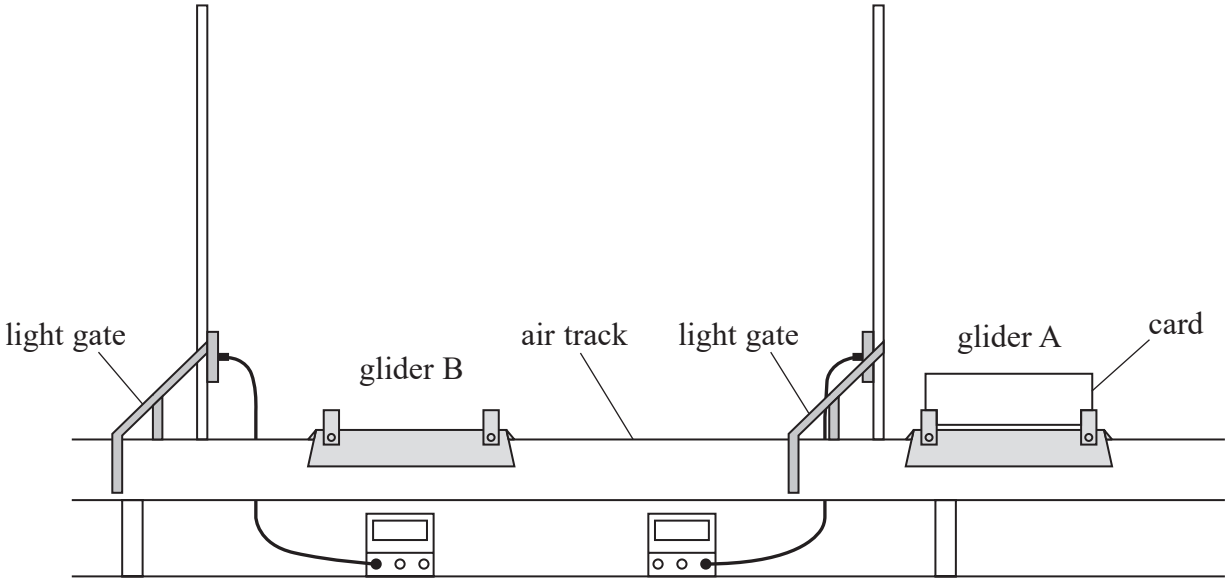

(a) The air track provides a cushion of air which reduces friction between the gliders and the track.

Describe how the student would show that the air track is horizontal before starting the investigation.

(1)

.....

.....

.....

.....

DO NOT WRITE IN THIS AREA
DO NOT WRITE IN THIS AREA
DO NOT WRITE IN THIS AREA

www.dynamicpapers.com

DO NOT WRITE IN THIS AREA
DO NOT WRITE IN THIS AREA
DO NOT WRITE IN THIS AREA

(b) The student pushed glider A. The first light gate recorded the time t_1 for the card on glider A to pass through it.

The gliders collided and stuck together. The second light gate recorded the time t_2 for the card on glider A to pass through it.

The student recorded t_1 and t_2 for three separate collisions.

t_1 / s	0.34	0.21	0.28
t_2 / s	0.70	0.39	0.55

The masses of the gliders were identical. If momentum is conserved then $t_2 = 2t_1$.

Show that momentum was conserved in this investigation.

(3)

(c) Another student suggested that using a piece of card twice as long would improve the investigation.

Assess this suggestion.

(3)

(Total for Question 1 = 7 marks)

www.dynamicpapers.com

2 A student wrote the following plan to investigate the distance travelled by alpha particles in air.

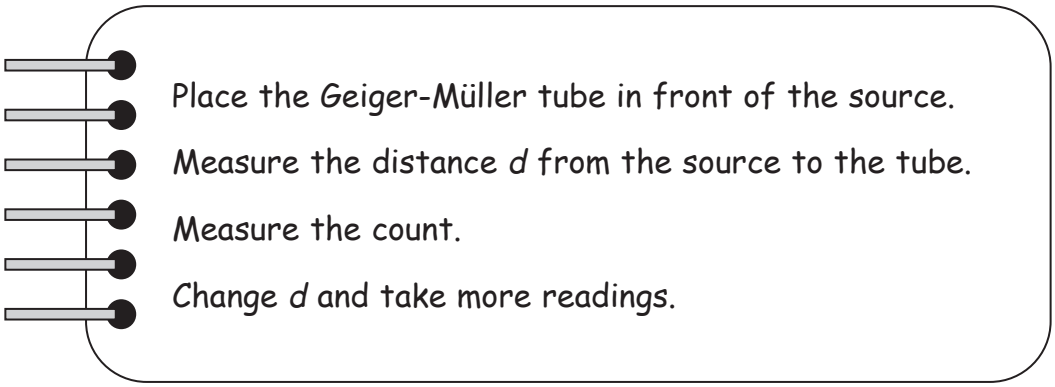

Devise a more detailed plan for this investigation.

(Total for Question 2 = 6 marks)

DO NOT WRITE IN THIS AREA
DO NOT WRITE IN THIS AREA
DO NOT WRITE IN THIS AREA

www.dynamicpapers.com

DO NOT WRITE IN THIS AREA
DO NOT WRITE IN THIS AREA
DO NOT WRITE IN THIS AREA

BLANK PAGE

www.dynamicpapers.com

3 A bar magnet was suspended from a wooden retort stand as shown.

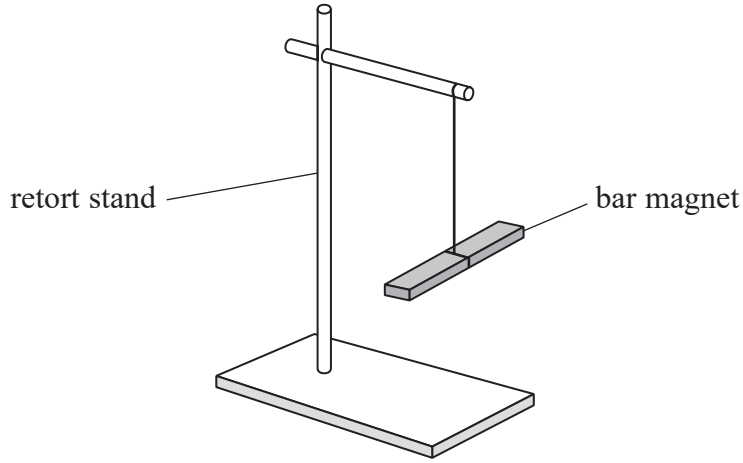

The magnet lined up with the magnetic field of the Earth.

The magnet was given a small angular displacement from its equilibrium position and oscillated in a horizontal plane about the string as shown.

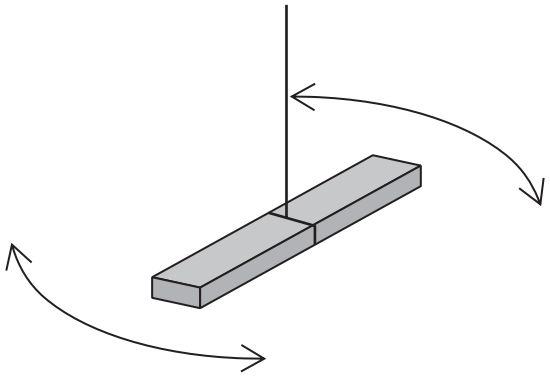

(a) Describe how the time period of these oscillations should be measured to make the readings as accurate as possible.

(3)

.....

.....

.....

.....

.....

.....

DO NOT WRITE IN THIS AREA
DO NOT WRITE IN THIS AREA
DO NOT WRITE IN THIS AREA

www.dynamicpapers.com

DO NOT WRITE IN THIS AREA
DO NOT WRITE IN THIS AREA
DO NOT WRITE IN THIS AREA

(b) A loop of wire was placed vertically around the centre of the oscillating magnet as shown.

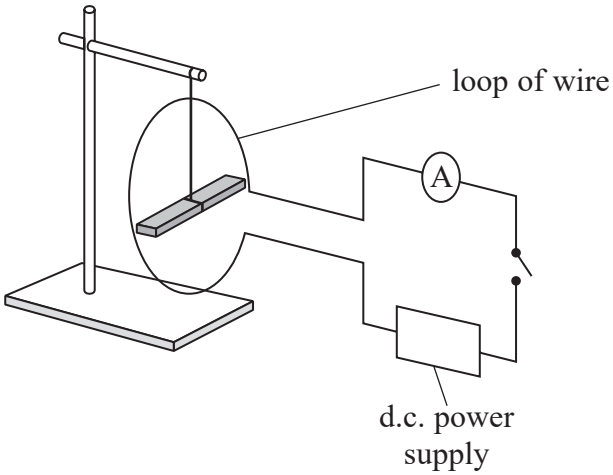

When the switch was closed, there was a current I in the loop of wire and the time period T of the oscillations decreased.

A student predicted that the relationship between T and I is

$$T = I^n$$

where n is a constant.

(i) State an additional component required in the circuit that would allow this relationship to be investigated.

(1)

.....

.....

(ii) Explain why plotting a graph of log T against log I would test the validity of this relationship.

(2)

.....

.....

.....

.....

www.dynamicpapers.com

(c) The student processed his results and produced the table below.

T/s	I/A		
0.813	1.20		
0.754	1.40		
0.706	1.60		
0.663	1.80		
0.631	2.00		
0.593	2.20		

(i) Plot a graph of log T against log I on the grid opposite.
Use the additional columns in the table to record your processed data.

(6)

(ii) Use your graph to determine a value for n.

(3)

.....

.....

.....

.....

n = ...

DO NOT WRITE IN THIS AREA
DO NOT WRITE IN THIS AREA
DO NOT WRITE IN THIS AREA

www.dynamicpapers.com

DO NOT WRITE IN THIS AREA
DO NOT WRITE IN THIS AREA
DO NOT WRITE IN THIS AREA

www.dynamicpapers.com

(iii) After plotting the graph, the student modified his prediction. He suggested that the relationship between T and I is

$$T = kI^n$$

where k is a constant.

Justify this suggestion.

(4)

.....

.....

.....

.....

.....

.....

.....

.....

(Total for Question 3 = 19 marks)

DO NOT WRITE IN THIS AREA
DO NOT WRITE IN THIS AREA
DO NOT WRITE IN THIS AREA

www.dynamicpapers.com

DO NOT WRITE IN THIS AREA
DO NOT WRITE IN THIS AREA
DO NOT WRITE IN THIS AREA

4 The diagram shows a 100 g slotted mass drawn approximately to size.
A student determined the density of the metal from which the slotted mass was made.

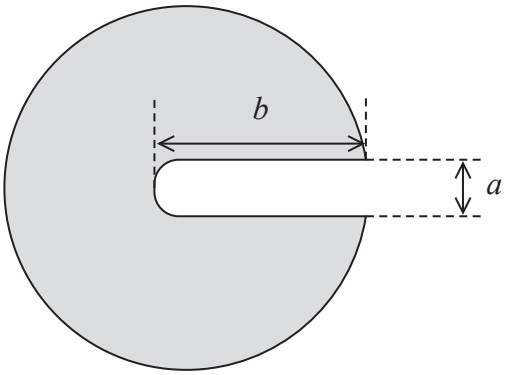

(a) (i) State the most appropriate measuring instrument for the student to use to measure the width *a* and the length *b* of the slot.

(1)

.....

.....

(ii) Explain one technique she should use when measuring *a* and *b*.

(2)

.....

.....

.....

.....

(iii) Calculate the area of the slot and its uncertainty in cm^2.
Assume the slot is rectangular.

$a = 0.47 \pm 0.01$ cm

$b = 2.19 \pm 0.005$ cm

(3)

.....

.....

.....

.....

Area of the slot = ... ± ..... cm^2

www.dynamicpapers.com

(b) The student made a single measurement of the diameter of the slotted mass as 3.81 cm.

(i) Calculate the shaded area of the slotted mass in cm^2.

(2)

Shaded area = ... cm^2

(ii) Calculate the uncertainty in the value of the shaded area.

(3)

Uncertainty = ... cm^2

(c) The student used a micrometer screw gauge to measure the thickness t of the slotted mass. She obtained the following results.

***t*/ mm**				**mean *t*/ mm**
11.39	11.36	11.35	11.38	11.37

(i) Calculate the density ρ of the metal in $g\,cm^{-3}$. Assume the value of mass is 100 g with negligible uncertainty.

(2)

ρ = ... $g\,cm^{-3}$

DO NOT WRITE IN THIS AREA
DO NOT WRITE IN THIS AREA
DO NOT WRITE IN THIS AREA

www.dynamicpapers.com

(ii) Calculate the percentage uncertainty in the value of ρ.

(3)

Percentage uncertainty = ...

(d) The student thinks that the slotted mass is made from brass, which has a density of 8.5 g cm^{-3}.

Determine whether the slotted mass could be made of brass.

(2)

(Total for Question 4 = 18 marks)

TOTAL FOR PAPER = 50 MARKS

DO NOT WRITE IN THIS AREA
DO NOT WRITE IN THIS AREA
DO NOT WRITE IN THIS AREA

www.dynamicpapers.com

List of data, formulae and relationships

Acceleration of free fall	$g = 9.81\ \text{m s}^{-2}$	(close to Earth's surface)
Boltzmann constant	$k = 1.38 \times 10^{-23}\ \text{J K}^{-1}$	
Coulomb's law constant	$k = 1/4\pi\varepsilon_0$	
	$= 8.99 \times 10^9\ \text{N m}^2\ \text{C}^{-2}$	
Electron charge	$e = -1.60 \times 10^{-19}\ \text{C}$	
Electron mass	$m_e = 9.11 \times 10^{-31}\ \text{kg}$	
Electronvolt	$1\ \text{eV} = 1.60 \times 10^{-19}\ \text{J}$	
Gravitational constant	$G = 6.67 \times 10^{-11}\ \text{N m}^2\ \text{kg}^{-2}$	
Gravitational field strength	$g = 9.81\ \text{N kg}^{-1}$	(close to Earth's surface)
Permittivity of free space	$\varepsilon_0 = 8.85 \times 10^{-12}\ \text{F m}^{-1}$	
Planck constant	$h = 6.63 \times 10^{-34}\ \text{J s}$	
Proton mass	$m_p = 1.67 \times 10^{-27}\ \text{kg}$	
Speed of light in a vacuum	$c = 3.00 \times 10^8\ \text{m s}^{-1}$	
Stefan-Boltzmann constant	$\sigma = 5.67 \times 10^{-8}\ \text{W m}^{-2}\ \text{K}^{-4}$	
Unified atomic mass unit	$u = 1.66 \times 10^{-27}\ \text{kg}$	

Unit 1

Mechanics

Kinematic equations of motion

$$s = \frac{(u + v)t}{2}$$

$$v = u + at$$

$$s = ut + \frac{1}{2}at^2$$

$$v^2 = u^2 + 2as$$

Forces

$$\Sigma F = ma$$

$$g = \frac{F}{m}$$

$$W = mg$$

Momentum

$$p = mv$$

Moment of force

$$\text{moment} = Fx$$

Work and energy

$$\Delta W = F\Delta s$$

$$E_k = \frac{1}{2}mv^2$$

$$\Delta E_{grav} = mg\Delta h$$

Power

$$P = \frac{E}{t}$$

$$P = \frac{W}{}$$

DO NOT WRITE IN THIS AREA
DO NOT WRITE IN THIS AREA
DO NOT WRITE IN THIS AREA

www.dynamicpapers.com

DO NOT WRITE IN THIS AREA
DO NOT WRITE IN THIS AREA
DO NOT WRITE IN THIS AREA

Efficiency

$$\text{efficiency} = \frac{\text{useful energy output}}{\text{total energy input}}$$

$$\text{efficiency} = \frac{\text{useful power output}}{\text{total power input}}$$

Materials

Density $\rho = \frac{m}{V}$

Stokes' law $F = 6\pi\eta r v$

Hooke's law $\Delta F = k\Delta x$

Elastic strain energy $\Delta E_{el} = \frac{1}{2} F \Delta x$

Young modulus $E = \frac{\sigma}{\varepsilon}$ where

Stress $\sigma = \frac{F}{A}$

Strain $\varepsilon = \frac{\Delta x}{x}$

www.dynamicpapers.com

Unit 2

Waves

Wave speed	$v = f\lambda$
Speed of a transverse wave on a string	$v = \sqrt{\frac{T}{\mu}}$
Intensity of radiation	$I = \frac{P}{A}$
Refractive index	$n_1 \sin\theta_1 = n_2 \sin\theta_2$
	$n = \frac{c}{v}$
Critical angle	$\sin C = \frac{1}{n}$
Diffraction grating	$n\lambda = d\sin\theta$

Electricity

Potential difference	$V = \frac{W}{Q}$
Resistance	$R = \frac{V}{I}$
Electrical power, energy	$P = VI$
	$P = I^2R$
	$P = \frac{V^2}{R}$
	$W = VIt$
Resistivity	$R = \frac{\rho l}{A}$
Current	$I = \frac{\Delta Q}{\Delta t}$
	$I = nqvA$
Resistors in series	$R = R_1 + R_2 + R_3$
Resistors in parallel	$\frac{1}{R} = \frac{1}{R_1} + \frac{1}{R_2} + \frac{1}{R_3}$

Quantum physics

Photon model	$E = hf$
Einstein's photoelectric equation	$hf = \phi + \frac{1}{2}mv^2_{\max}$
de Broglie wavelength	$\lambda = \frac{h}{p}$

DO NOT WRITE IN THIS AREA
DO NOT WRITE IN THIS AREA
DO NOT WRITE IN THIS AREA

www.dynamicpapers.com

DO NOT WRITE IN THIS AREA
DO NOT WRITE IN THIS AREA
DO NOT WRITE IN THIS AREA

Unit 4

Mechanics

Impulse	$F\Delta t = \Delta p$
Kinetic energy of a non-relativistic particle	$E_k = \frac{p^2}{2m}$
motion in a circle	$v = \omega r$
	$T = \frac{2\pi}{\omega}$
	$a = \frac{v^2}{r}$
Centripetal force	$F = ma = \frac{mv^2}{r}$
	$F = m\omega^2 r$

Electric and magnetic fields

Electric field	$E = \frac{F}{Q}$
Coulomb's law	$F = \frac{Q_1 Q_2}{4\pi\varepsilon_0 r^2}$
	$E = \frac{Q}{4\pi\varepsilon_0 r^2}$
	$E = \frac{V}{d}$
Electrical Potential	$V = \frac{Q}{4\pi\varepsilon_0 r}$
Capacitance	$C = \frac{Q}{V}$
Energy stored in capacitor	$W = \frac{1}{2}QV$
	$W = \frac{1}{2}CV^2$
	$W = \frac{1}{2}\frac{Q^2}{C}$
Capacitor discharge	$Q = Q_0 e^{-t/RC}$

www.dynamicpapers.com

Resistor capacitor discharge $I = I_0 e^{-t/RC}$

$V = V_0 e^{-t/RC}$

$\ln Q = \ln Q_0 - \frac{t}{RC}$

$\ln I = \ln I_0 - \frac{t}{RC}$

$\ln V = \ln V_0 - \frac{t}{RC}$

In a magnetic field $F = Bqv \sin \theta$

$F = BIl \sin \theta$

Faraday's and Lenz's laws $\mathscr{E} = \frac{-\mathrm{d}(N\phi)}{\mathrm{d}t}$

Nuclear and particle physics

In a magnetic field $r = \frac{p}{BQ}$

Mass-energy $\Delta E = c^2 \Delta m$

DO NOT WRITE IN THIS AREA
DO NOT WRITE IN THIS AREA
DO NOT WRITE IN THIS AREA

www.dynamicpapers.com

DO NOT WRITE IN THIS AREA
DO NOT WRITE IN THIS AREA
DO NOT WRITE IN THIS AREA

Unit 5

Thermodynamics

Heating

$$\Delta E = mc\Delta\theta$$

$$\Delta E = L\Delta m$$

Ideal gas equation

$$pV = NkT$$

Molecular kinetic theory

$$\tfrac{1}{2}m\langle c^2\rangle = \tfrac{3}{2}kT$$

Nuclear decay

Mass-energy

$$\Delta E = c^2\Delta m$$

Radio-active decay

$$A = -\lambda N$$

$$\frac{\mathrm{d}N}{\mathrm{d}t} = -\lambda N$$

$$\lambda = \frac{\ln 2}{t_{1/2}}$$

$$N = N_0 \mathrm{e}^{-\lambda t}$$

$$A = A_0 \mathrm{e}^{-\lambda t}$$

Oscillations

Simple harmonic motion

$$F = kx$$

$$a = -\omega^2 x$$

$$x = A\cos\omega t$$

$$v = -A\omega\sin\omega t$$

$$a = A\omega^2\cos\omega t$$

$$T = \frac{1}{f} = \frac{2\pi}{\omega}$$

$$\omega = 2\pi f$$

Simple harmonic oscillator

$$T = 2\pi\sqrt{\frac{m}{k}}$$

$$T = 2\pi\sqrt{\frac{l}{g}}$$

www.dynamicpapers.com

Astrophysics and Cosmology

Gravitational field strength	$g = F/m$
Gravitational force	$F = \frac{Gm_1m_2}{r^2}$
Gravitational field	$g = \frac{Gm}{r^2}$
Gravitational potential	$V_{grav} = \frac{-Gm}{r}$
Stephan-Boltzman law	$L = \sigma T^4 A$
Wein's law	$\lambda_{max} T = 2.898 \times 10^{-3}\ \text{m K}$
Intensity of radiation	$I = \frac{L}{4\pi d^2}$
Redshift of electromagnetic radiation	$z = \frac{\Delta\lambda}{\lambda} \approx \frac{\Delta f}{f} \approx \frac{v}{c}$
Cosmological expansion	$v = H_0 d$

DO NOT WRITE IN THIS AREA
DO NOT WRITE IN THIS AREA
DO NOT WRITE IN THIS AREA