www.dynamicpapers.com

Please check the examination details below before entering your candidate information

Candidate surname	Other names

Pearson Edexcel
International
Advanced Level

Centre Number | | | | | |

Candidate Number | | | | |

Tuesday 14 May 2019

Morning (Time: 1 hour 30 minutes) | Paper Reference **WPH11/01**

Physics

Advanced Subsidiary
Unit 1: Mechanics and Materials

You must have:
A ruler

Total Marks

Instructions

- Use **black** ink or **black** ball-point pen.
- **Fill in the boxes** at the top of this page with your name, centre number and candidate number.
- Answer **all** questions.
- Answer the questions in the spaces provided
  – *there may be more space than you need.*
- **Show all your working in calculations and include units where appropriate.**

Information

- The total mark for this paper is 80.
- The marks for **each** question are shown in brackets
  – *use this as a guide as to how much time to spend on each question.*
- In questions marked with an **asterisk** (*), marks will be awarded for your ability to structure your answer logically showing how the points that you make are related or follow on from each other where appropriate.

Advice

- Read each question carefully before you start to answer it.
- Try to answer every question.
- Check your answers if you have time at the end.

Turn over ▶

P61472RRA

©2019 Pearson Education Ltd.

1/1/1/1/1/1/C2/1/1/

P 6 1 4 7 2 R R A 0 1 2 8

Pearson

www.dynamicpapers.com

SECTION A

Answer ALL questions.

For questions 1–10, select one answer from A to D and put a cross in the box ☒. If you change your mind, put a line through the box ☒ and then mark your new answer with a cross ☒.

1 Quantities in physics are classified as either vectors or scalars.

Which of the following units could **only** be used for a scalar quantity?

☒ **A** $m\,s^{-1}$

☒ **B** $m\,s^{-2}$

☒ **C** $kg\,m\,s^{-2}$

☒ **D** $kg\,m^{-3}$

(Total for Question 1 = 1 mark)

2 Once in orbit above the Earth's atmosphere, the engines on a space rocket are switched off.

Which row of the table correctly states the resulting motion of the rocket and the law explaining this motion?

	Motion of rocket	Explanation
☒ **A**	uniform velocity	Newton's 2nd law
☒ **B**	uniform velocity	Newton's 3rd law
☒ **C**	changing velocity	Newton's 2nd law
☒ **D**	changing velocity	Newton's 3rd law

(Total for Question 2 = 1 mark)

DO NOT WRITE IN THIS AREA
DO NOT WRITE IN THIS AREA
DO NOT WRITE IN THIS AREA

www.dynamicpapers.com

DO NOT WRITE IN THIS AREA
DO NOT WRITE IN THIS AREA
DO NOT WRITE IN THIS AREA

3 A sphere of weight 2.5 N floats in water with ½ of its volume beneath the surface.

A force F is applied to the sphere, completely immersing it in the water as shown.



Which of the following is the minimum value of F?

☒ **A** $2 \times 2.5\,\text{N}$

☒ **B** $1 \times 2.5\,\text{N}$

☒ **C** $\frac{1}{2} \times 2.5\,\text{N}$

☒ **D** $\frac{1}{4} \times 2.5\,\text{N}$

(Total for Question 3 = 1 mark)

4 A ball rolls off a table with a horizontal velocity of $1.2\,\text{m s}^{-1}$. The ball takes 0.9 s to reach the ground and lands a distance s from the table as shown.

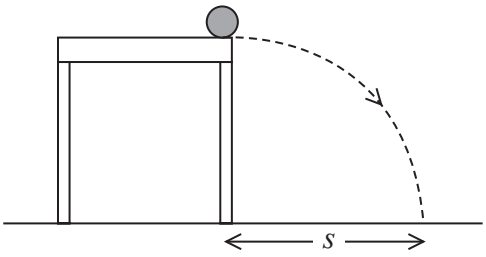

Which of the following expressions could be used to determine the value of s in metres?

☒ **A** $\dfrac{1.2^2}{2 \times 9.81}$

☒ **B** 1.2×0.9

☒ **C** $\frac{1}{2} \times 9.81 \times 0.9^2$

☒ **D** $(1.2 \times 0.9) + (\frac{1}{2} \times 9.81 \times 0.9^2)$

(Total for Question 4 = 1 mark)

www.dynamicpapers.com

5 A sample of sea water is collected using a beaker. The sample contains some particles of sand which settle at the bottom of the beaker.

Which of the following would result in a decrease in the time taken for the sand to settle?

☒ **A** smaller particles of sand

☒ **B** lower temperature of the sea water

☒ **C** smaller terminal velocity of sand particles

☒ **D** lower viscosity of the sea water

(Total for Question 5 = 1 mark)

6 A graph of stress σ against strain ε, up to the breaking point, is drawn for four samples of wire, A, B, C and D.

Which sample of wire has both a low elastic limit **and** a large region of plastic deformation?

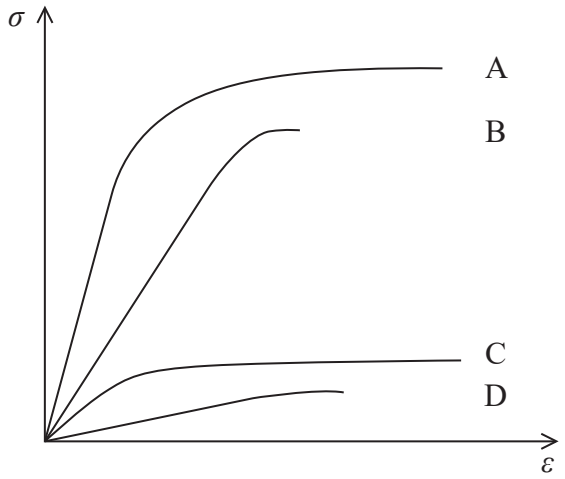

☒ **A**

☒ **B**

☒ **C**

☒ **D**

(Total for Question 6 = 1 mark)

DO NOT WRITE IN THIS AREA
DO NOT WRITE IN THIS AREA
DO NOT WRITE IN THIS AREA

www.dynamicpapers.com

DO NOT WRITE IN THIS AREA
DO NOT WRITE IN THIS AREA
DO NOT WRITE IN THIS AREA

7 A water pump causes 200 g of water to be ejected from the nozzle of a garden hose each second at a velocity of $3\,\text{m}\,\text{s}^{-1}$.

Which of the following expressions could be used to determine the minimum output power in watts required from the pump?

☒ **A** $\dfrac{200 \times 3^2}{2}$

☒ **B** $\dfrac{0.2 \times 3^2}{2}$

☒ **C** $\dfrac{200 \times 3}{2}$

☒ **D** $\dfrac{0.2 \times 3}{2}$

(Total for Question 7 = 1 mark)

8 A model rocket is launched and moves vertically upwards while still burning fuel to give a constant upwards thrust. The fuel runs out, and the rocket reaches the maximum height at time T before falling back to the ground.

Which of the following graphs could show how the acceleration a of the rocket varies with time t, if the decrease in mass as the fuel burns is neglected?

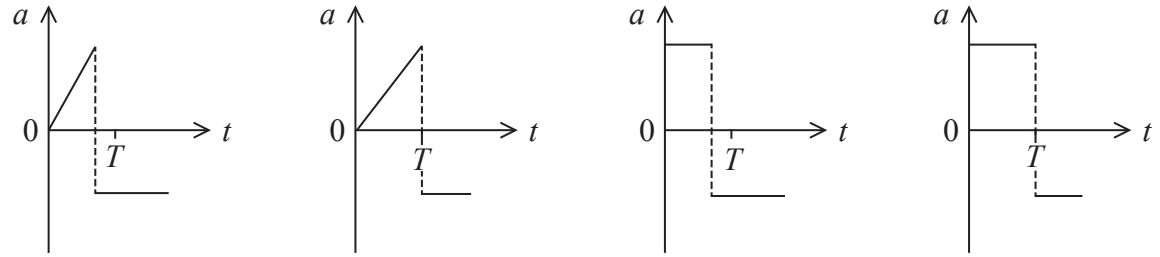

☒ **A** ☒ **B** ☒ **C** ☒ **D**

(Total for Question 8 = 1 mark)

www.dynamicpapers.com

9 A student walked 12 km on a bearing of 135° and then walked 20 km on a bearing of 340° as shown.

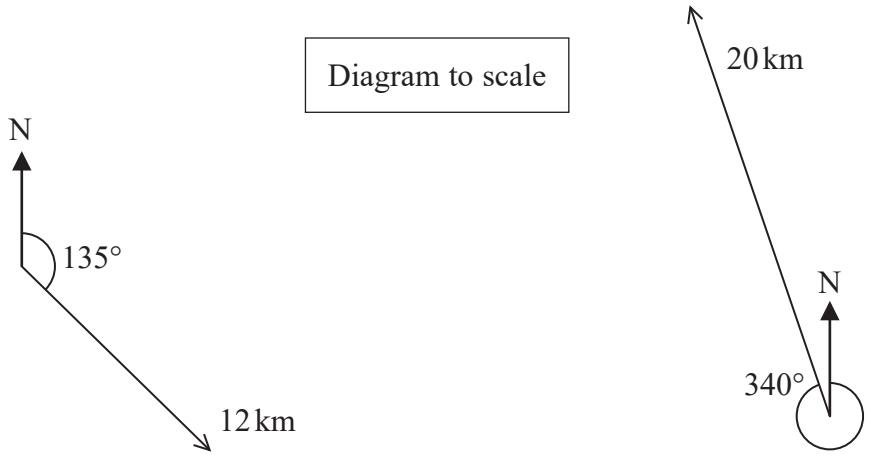

Which of the following could represent the final displacement of the student from his starting point?

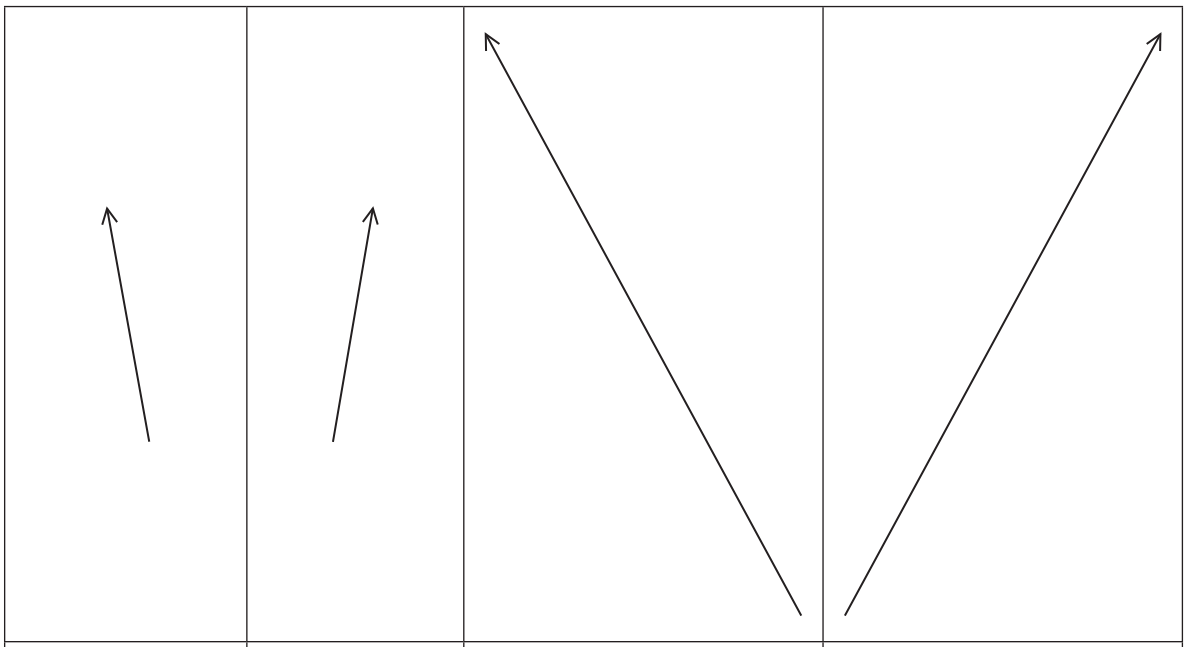

(Total for Question 9 = 1 mark)

DO NOT WRITE IN THIS AREA
DO NOT WRITE IN THIS AREA
DO NOT WRITE IN THIS AREA

www.dynamicpapers.com

10 A lift moves upwards from rest with an acceleration a. A student of mass 70 kg standing in the lift exerts a force of 800 N on the floor of the lift.

Which of the following expressions could be used to determine a?

☒ **A** $70g = 70a$

☒ **B** $800 = 70a$

☒ **C** $800 - 70g = 70a$

☒ **D** $70g - 800 = 70a$

(Total for Question 10 = 1 mark)

TOTAL FOR SECTION A = 10 MARKS

DO NOT WRITE IN THIS AREA
DO NOT WRITE IN THIS AREA
DO NOT WRITE IN THIS AREA

www.dynamicpapers.com

SECTION B

Answer ALL questions in the spaces provided.

11 A child is standing on a skateboard and both are stationary. The child throws a ball forward at a high velocity and the child and the skateboard move backwards at a lower velocity.

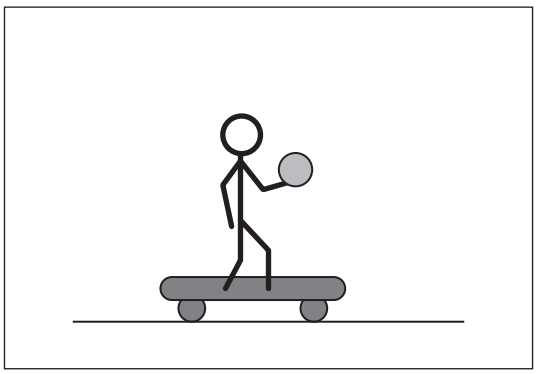

Before

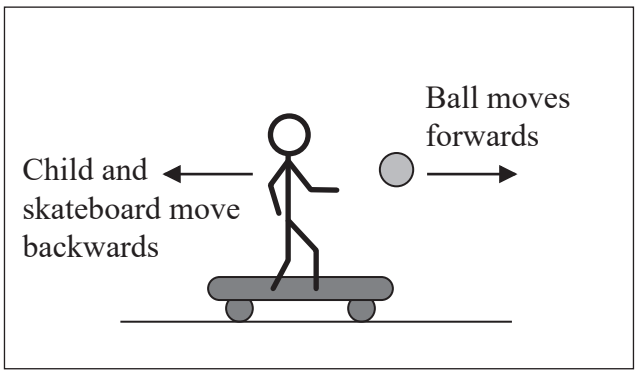

After

Explain, in terms of momentum, why the child and the skateboard move backwards at a lower velocity.

(4)

(Total for Question 11 = 4 marks)

DO NOT WRITE IN THIS AREA
DO NOT WRITE IN THIS AREA
DO NOT WRITE IN THIS AREA

www.dynamicpapers.com

12 Machines make work easier by changing the size or direction of a force. A student designed a simple machine to lift a box of mass 50 kg. The student claimed the efficiency of the machine was greater than 90%.

The machine used a slope of height 2.0 m and length 15 m to move the box. The box was connected to an 8.0 kg mass by a rope over a pulley as shown. As the 8.0 kg mass fell, the box moved up the slope at a steady speed.

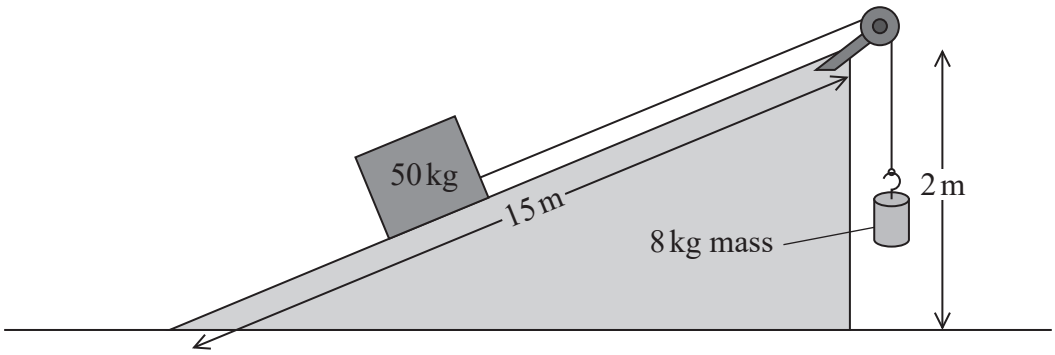

Determine whether the maximum efficiency of the machine was greater than 90%.

(4)

(Total for Question 12 = 4 marks)

DO NOT WRITE IN THIS AREA
DO NOT WRITE IN THIS AREA
DO NOT WRITE IN THIS AREA

www.dynamicpapers.com

13 A swimmer swims a 100 m race. A simplified displacement-time graph for the swimmer is shown.

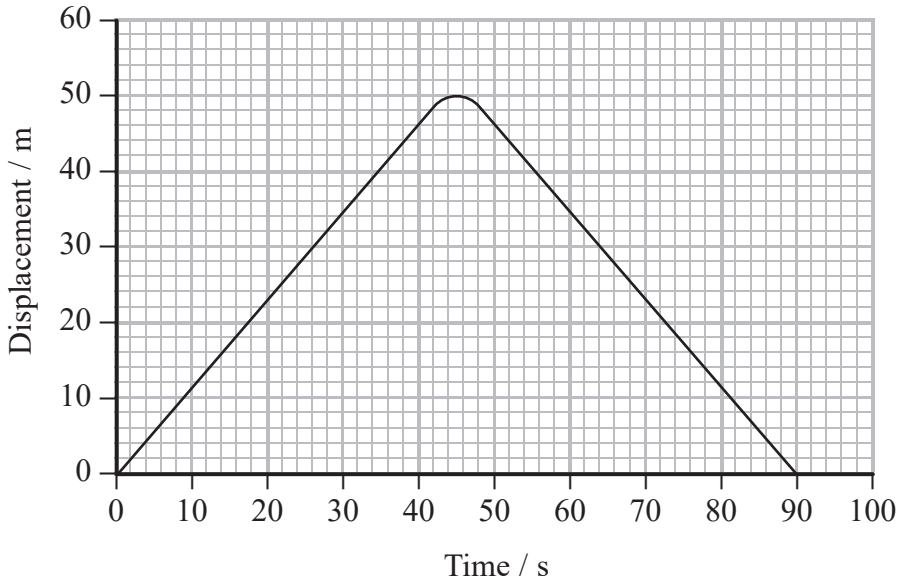

(a) Draw a corresponding velocity-time graph for the motion of the swimmer on the axes below. Show all working in the space below.

(4)

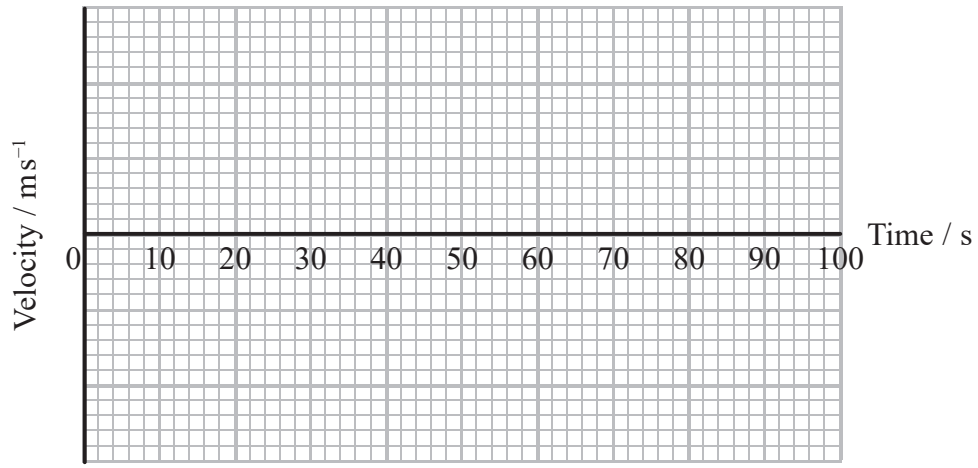

DO NOT WRITE IN THIS AREA
DO NOT WRITE IN THIS AREA
DO NOT WRITE IN THIS AREA

www.dynamicpapers.com

(b) To increase her initial speed, the swimmer began the race by gliding underwater for 15 m and then began to use her arms and legs. This was not represented on the simplified displacement-time graph.

(i) Sketch onto the axes below to show the actual variation of displacement with time for the first 15 m of the race.

(2)

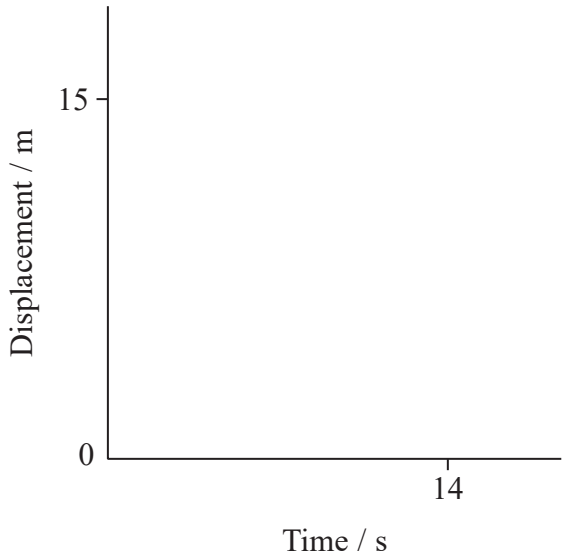

(ii) Explain one other way in which the motion of the swimmer has been simplified when drawing the displacement-time graph.

(2)

.....

.....

.....

.....

(Total for Question 13 = 8 marks)

DO NOT WRITE IN THIS AREA
DO NOT WRITE IN THIS AREA
DO NOT WRITE IN THIS AREA

www.dynamicpapers.com

14 A firework is launched into the air and explodes once it reaches a maximum height.



(a) The firework is designed to explode at a maximum height of 350 m.

(i) Show that the vertical component of the velocity at launch is about 80 m s^{-1}.

(2)

.....

.....

.....

.....

(ii) The vertical component of the velocity at launch depends on both the initial velocity of the firework and θ, the angle between the initial velocity and the horizontal.

Sketch a graph showing how the initial velocity required for the firework to reach the maximum height of 350 m varies with θ for the firework.

(4)

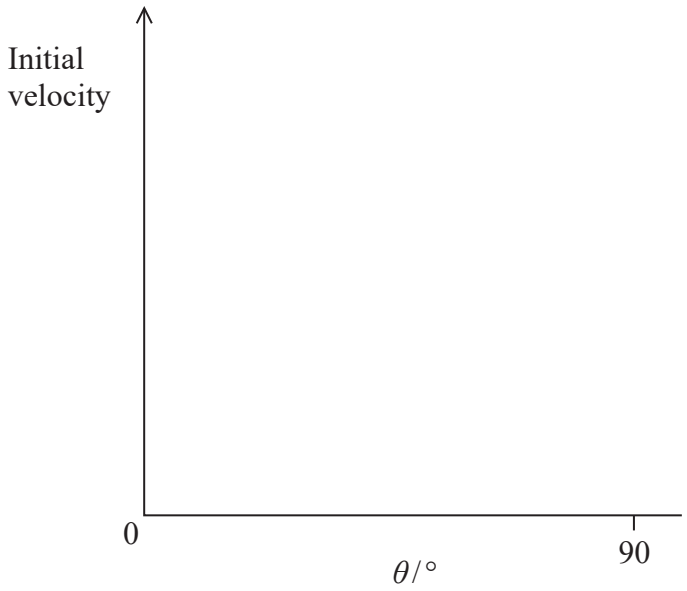

DO NOT WRITE IN THIS AREA
DO NOT WRITE IN THIS AREA
DO NOT WRITE IN THIS AREA

www.dynamicpapers.com

DO NOT WRITE IN THIS AREA
DO NOT WRITE IN THIS AREA
DO NOT WRITE IN THIS AREA

(b) A student wanted to estimate the maximum diameter of the firework after exploding.

The student estimated:

- the time taken between seeing the firework explode and hearing the firework explode
- the angle ϕ from the top to the bottom of the firework

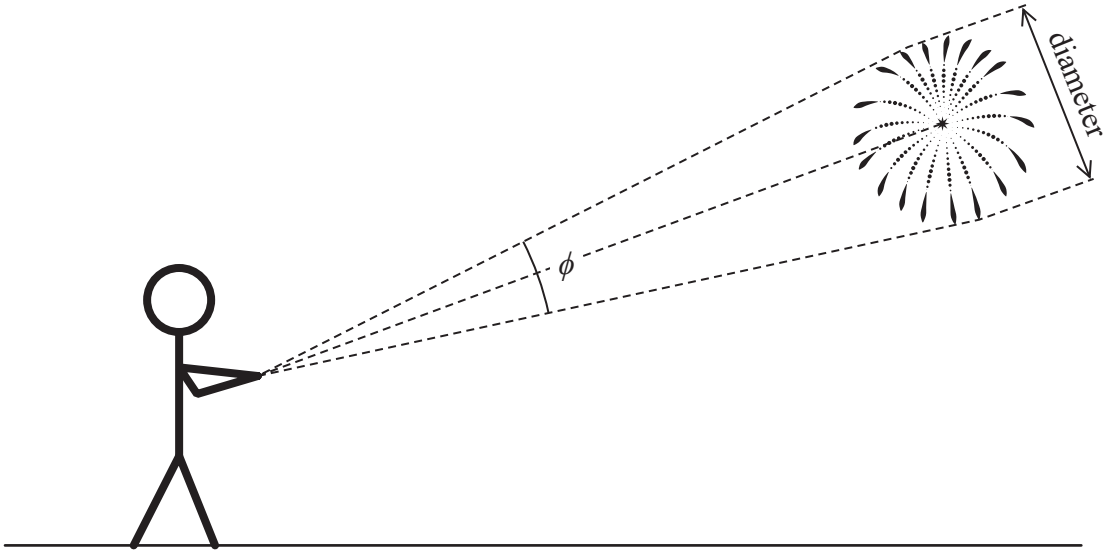

Describe how the student could determine the maximum diameter of the exploded firework using the estimated data.

(2)

(Total for Question 14 = 8 marks)

www.dynamicpapers.com

15 Muscles move body parts by contracting and relaxing. For the forearm to hold a ball in the position shown, the biceps muscle contracts, creating a tension *T* in the muscle as shown.

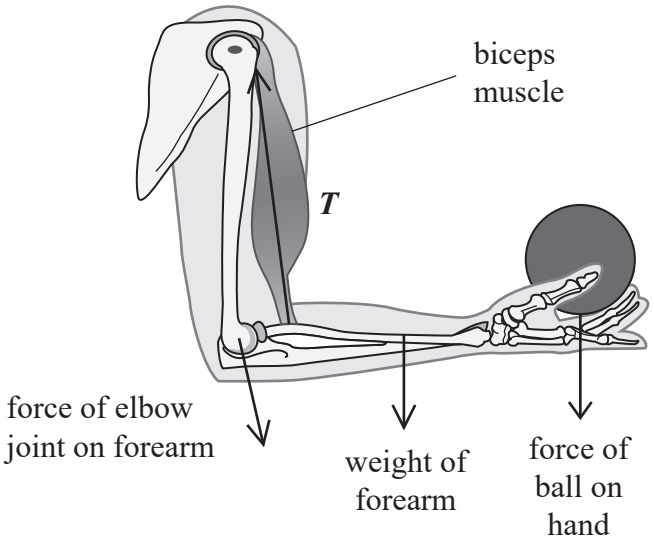

A student modelled the forces on the forearm using a uniform beam and spring arrangement as shown below. The length and weight of the beam were the same as the length and weight of the forearm.

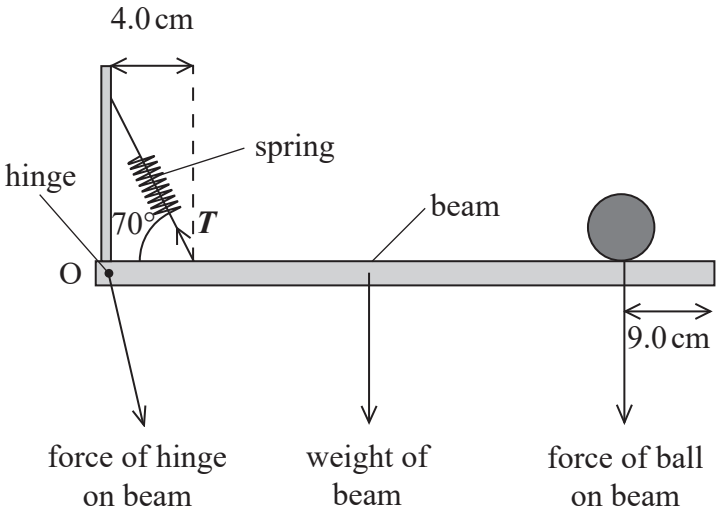

Diagram not to scale

DO NOT WRITE IN THIS AREA
DO NOT WRITE IN THIS AREA
DO NOT WRITE IN THIS AREA

www.dynamicpapers.com

DO NOT WRITE IN THIS AREA
DO NOT WRITE IN THIS AREA
DO NOT WRITE IN THIS AREA

(a) It can be assumed that the biceps muscle acts as a spring at an angle of 70° to the beam, 4.0 cm from the pivot O.

Determine the magnitude of T. You will need to estimate the total length of the forearm and hand.

force of ball on beam = 4.5 N
weight of beam = 15 N

(5)

Estimate of total length of forearm and hand = ...

.....

.....

.....

.....

.....

.....

.....

T = ...

(b) Explain a limitation of using a beam to model the forearm.

(2)

.....

.....

.....

.....

(Total for Question 15 = 7 marks)

www.dynamicpapers.com

16 A student carried out an experiment to determine the Young modulus of copper. She used the apparatus below to observe the position of a marker as a copper wire extended under increasing applied loads.

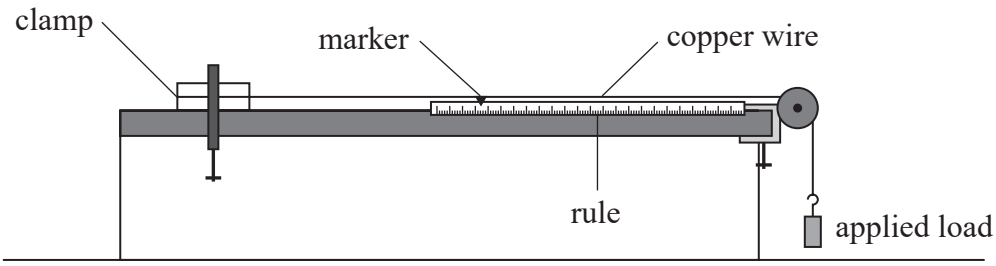

(a) Describe how the diameter of the wire should have been determined.

(3)

(b) The student calculated the extension of the copper wire for each applied load. She then plotted a graph of load against extension.

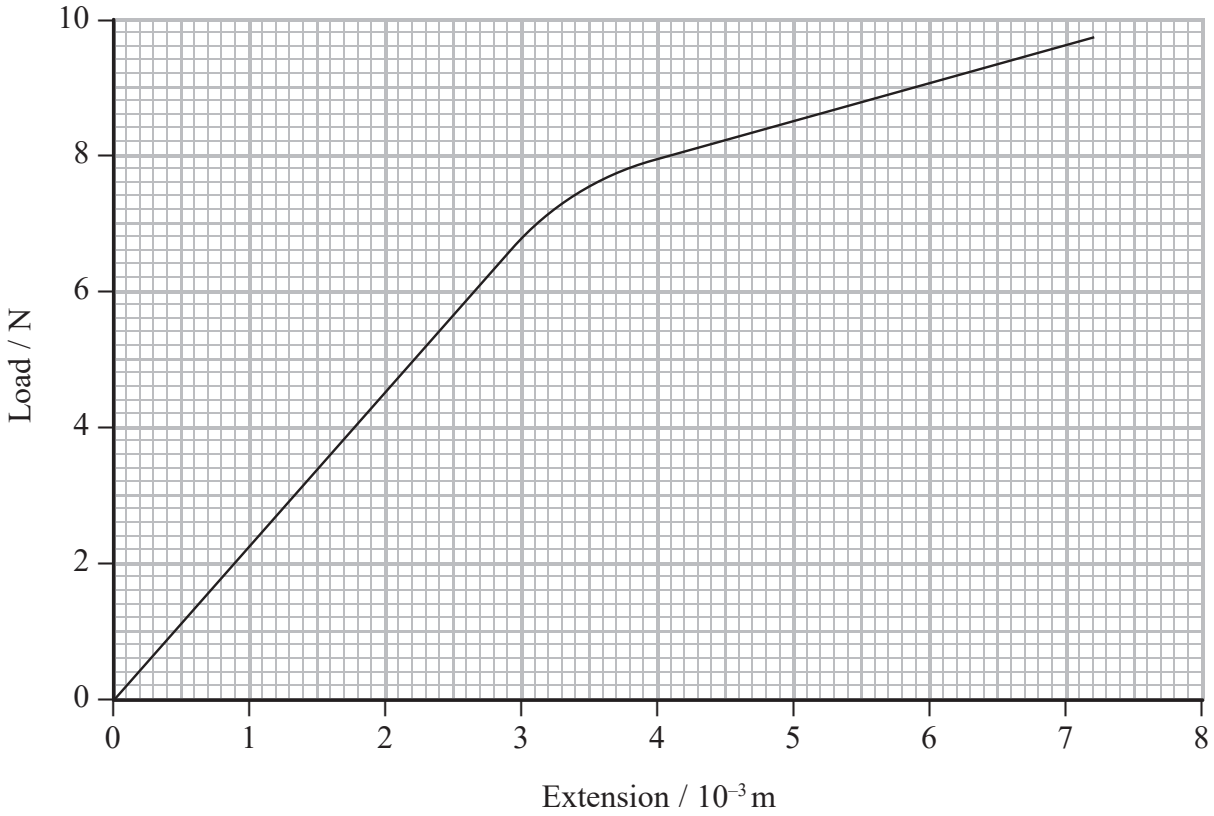

DO NOT WRITE IN THIS AREA
DO NOT WRITE IN THIS AREA
DO NOT WRITE IN THIS AREA

www.dynamicpapers.com

DO NOT WRITE IN THIS AREA
DO NOT WRITE IN THIS AREA
DO NOT WRITE IN THIS AREA

Determine a value for the Young modulus of copper.

original length of copper wire = 2.4 m
diameter of copper wire = 2.3×10^{-4} m

(4)

Young modulus of copper = ...

*(c) Explain why the sample of wire used in this experiment should be long and thin.

(6)

(Total for Question 16 = 13 marks)

www.dynamicpapers.com

DO NOT WRITE IN THIS AREA
DO NOT WRITE IN THIS AREA
DO NOT WRITE IN THIS AREA

BLANK PAGE

www.dynamicpapers.com

DO NOT WRITE IN THIS AREA
DO NOT WRITE IN THIS AREA
DO NOT WRITE IN THIS AREA

17 The diagram shows a climber on a rock face. A rope is kept firmly anchored by a person on the ground and passes through a smooth loop to the climber. The climber slips and falls a short distance as shown.

Diagram not to scale

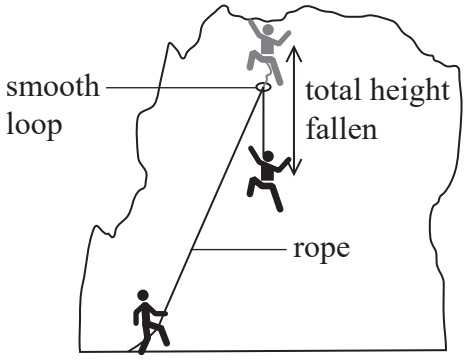

(a) The 'fall factor' is used by climbers to estimate the severity of a climbing fall and is given by

$$\text{'fall factor'} = \frac{\text{height fallen before the rope begins to stretch}}{\text{total unstretched length of rope}}$$

A climber slips and falls with a 'fall factor' of 0.80 before coming to rest.
The energy from the fall is absorbed by the climbing rope.
The maximum strain in the rope is 9.0%.

(i) Show that the maximum force acting on the climber due to the rope is about 10 kN.
Assume the extension of the rope is proportional to its tension.

total unstretched length of rope = 15.0 m
mass of climber = 71 kg

(5)

www.dynamicpapers.com

(ii) A new climber suggests using a longer length of rope between the loop and the climber, as this would absorb more energy after a fall.

Comment on this suggestion.

(2)

.....

.....

.....

.....

.....

(b) Climbing rope manufacturers recommend that ropes are replaced every 5 years.
The force-extension graphs, up to the breaking point, for a one metre length of a rope when new and after 5 years are shown.

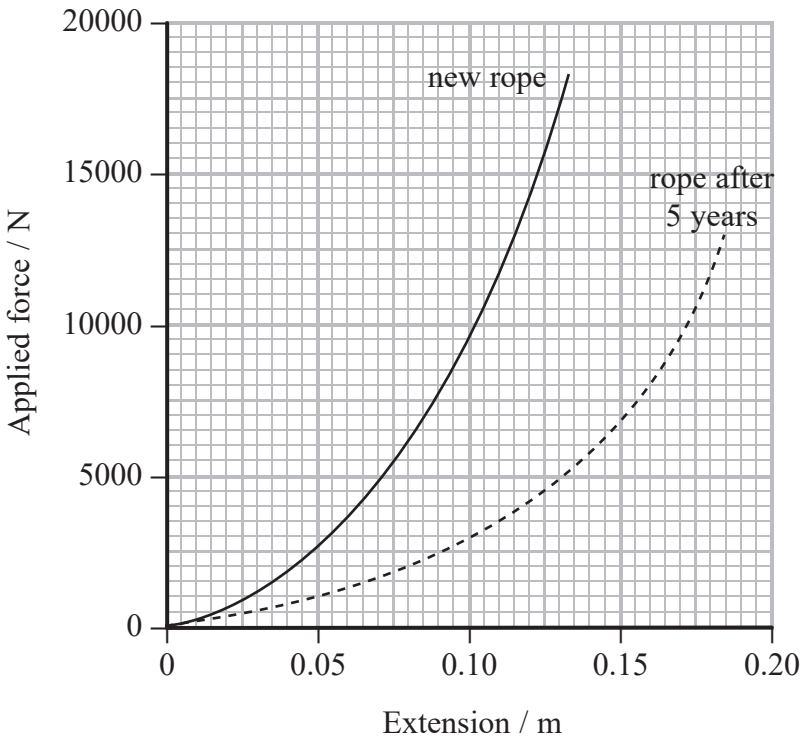

DO NOT WRITE IN THIS AREA
DO NOT WRITE IN THIS AREA
DO NOT WRITE IN THIS AREA

www.dynamicpapers.com

Comment on the manufacturers' recommendation. Your answer should include calculations.

(6)

(Total for Question 17 = 13 marks)

DO NOT WRITE IN THIS AREA
DO NOT WRITE IN THIS AREA
DO NOT WRITE IN THIS AREA

www.dynamicpapers.com

18 When water vapour in the atmosphere cools it condenses, forming tiny drops of water. These drops increase in size by colliding with each other and fall back to the ground as rain.

(a) As a raindrop falls through the air it eventually reaches its terminal velocity. The upthrust on the raindrop can be considered to be negligible.

(i) Explain what is meant by the terminal velocity of the raindrop. Your answer should include a free-body force diagram for the raindrop when terminal velocity has been reached.

(4)

DO NOT WRITE IN THIS AREA
DO NOT WRITE IN THIS AREA
DO NOT WRITE IN THIS AREA

www.dynamicpapers.com

DO NOT WRITE IN THIS AREA
DO NOT WRITE IN THIS AREA
DO NOT WRITE IN THIS AREA

(ii) The air resistance F acting on a raindrop travelling at a velocity v, can be determined using the expression

$$F = 0.45\rho A v^2$$

where A is the cross-sectional area of the raindrop and ρ is the density of the air.

Calculate the terminal velocity of a spherical raindrop of radius 2.0×10^{-3} m.

density of air = $1.2\,\text{kg m}^{-3}$
density of rainwater = $1.0 \times 10^{3}\,\text{kg m}^{-3}$

(4)

Terminal velocity = ...

www.dynamicpapers.com

(b) Some plants have adapted to high rainfall by having a specialised shape and waxy leaves. This allows rain to slide down a leaf and off the end as a series of drops.

(i) A drop of water slides off a leaf as shown.

Add to the diagram to show the position of the drop at regular intervals of time. The first two positions have been drawn for you.

(2)



(ii) Water falls from a leaf at a steady rate of five drops per second.

As each drop reaches the ground, there are four drops above it in the air.

Calculate the height of the leaf from the ground. It can be assumed that the drop at the highest position has just left the leaf.

(3)

Height of leaf = ...

(Total for Question 18 = 13 marks)

TOTAL FOR SECTION B = 70 MARKS
TOTAL FOR PAPER = 80 MARKS

DO NOT WRITE IN THIS AREA
DO NOT WRITE IN THIS AREA
DO NOT WRITE IN THIS AREA

www.dynamicpapers.com

DO NOT WRITE IN THIS AREA
DO NOT WRITE IN THIS AREA
DO NOT WRITE IN THIS AREA

List of data, formulae and relationships

Acceleration of free fall	$g = 9.81 \text{ m s}^{-2}$	(close to Earth's surface)
Gravitational field strength	$g = 9.81 \text{ N kg}^{-1}$	(close to Earth's surface)

Unit 1

Mechanics

Kinematic equations of motion

$$s = \frac{(u + v)t}{2}$$

$$v = u + at$$

$$s = ut + \frac{1}{2}at^2$$

$$v^2 = u^2 + 2as$$

Forces

$$\Sigma F = ma$$

$$g = \frac{F}{m}$$

$$W = mg$$

Momentum

$$p = mv$$

Moment of force

$$= Fx$$

Work and energy

$$\Delta W = F\Delta s$$

$$E_k = \frac{1}{2}mv^2$$

$$\Delta E_{grav} = mg\Delta h$$

Power

$$P = \frac{E}{t}$$

$$P = \frac{W}{t}$$

Efficiency

$$\text{efficiency} = \frac{\text{useful energy output}}{\text{total energy input}}$$

$$\text{efficiency} = \frac{\text{useful power output}}{\text{total power input}}$$

Materials

Density

$$\rho = \frac{m}{V}$$

Stokes' law

$$F = 6\pi\eta rv$$

Hooke's law

$$\Delta F = k\Delta x$$

Elastic strain energy

$$\Delta E_{el} = \frac{1}{2}F\Delta x$$

Young modulus

$$E = \frac{\sigma}{\varepsilon} \text{ where}$$

$$\text{Stress } \sigma = \frac{F}{A}$$

$$\text{Strain } \varepsilon = \frac{\Delta x}{x}$$

www.dynamicpapers.com

DO NOT WRITE IN THIS AREA
DO NOT WRITE IN THIS AREA
DO NOT WRITE IN THIS AREA

BLANK PAGE

www.dynamicpapers.com

DO NOT WRITE IN THIS AREA
DO NOT WRITE IN THIS AREA
DO NOT WRITE IN THIS AREA

BLANK PAGE

www.dynamicpapers.com

DO NOT WRITE IN THIS AREA

DO NOT WRITE IN THIS AREA

DO NOT WRITE IN THIS AREA

BLANK PAGE