www.dynamicpapers.com

Please check the examination details below before entering your candidate information

Candidate surname	Other names

Pearson Edexcel International GCSE (9–1)

Centre Number | Candidate Number

Time 1 hour 15 minutes

Paper reference **4PH1/2P**

Physics

PAPER: 2P

You must have:
Calculator, ruler

Total Marks

Instructions

- Use **black** ink or ball-point pen.
- **Fill in the boxes** at the top of this page with your name, centre number and candidate number.
- Answer **all** questions.
- Answer the questions in the spaces provided
  – *there may be more space than you need.*
- Show all the steps in any calculations and state the units.
- Some questions must be answered with a cross in a box ☒. If you change your mind about an answer, put a line through the box ☒ and then mark your new answer with a cross ☒.

Information

- The total mark for this paper is 70.
- The marks for **each** question are shown in brackets
  – *use this as a guide as to how much time to spend on each question.*

Advice

- Read each question carefully before you start to answer it.
- Write your answers neatly and in good English.
- Try to answer every question.
- Check your answers if you have time at the end.
- Good luck with your examination.

Turn over ▶

©2021 Pearson Education Ltd.

Pearson

www.dynamicpapers.com

FORMULAE

You may find the following formulae useful.

energy transferred = current × voltage × time $\qquad E = I \times V \times t$

$$\text{frequency} = \frac{1}{\text{time period}} \qquad f = \frac{1}{T}$$

$$\text{power} = \frac{\text{work done}}{\text{time taken}} \qquad P = \frac{W}{t}$$

$$\text{power} = \frac{\text{energy transferred}}{\text{time taken}} \qquad P = \frac{W}{t}$$

$$\text{orbital speed} = \frac{2\pi \times \text{orbital radius}}{\text{time period}} \qquad v = \frac{2 \times \pi \times r}{T}$$

(final speed)^2 = (initial speed)^2 + (2 × acceleration × distance moved)

$$v^2 = u^2 + (2 \times a \times s)$$

pressure × volume = constant $\qquad p_1 \times V_1 = p_2 \times V_2$

$$\frac{\text{pressure}}{\text{temperature}} = \text{constant} \qquad \frac{p_1}{T_1} = \frac{p_2}{T_2}$$

$$\text{force} = \frac{\text{change in momentum}}{\text{time taken}} \qquad F = \frac{(mv - mu)}{t}$$

$$\frac{\text{change of wavelength}}{\text{wavelength}} = \frac{\text{velocity of a galaxy}}{\text{speed of light}} \qquad \frac{\lambda - \lambda_0}{\lambda_0} = \frac{\Delta\lambda}{\lambda_0} = \frac{v}{c}$$

change in thermal energy = mass × specific heat capacity × change in temperature

$$\Delta Q = m \times c \times \Delta T$$

Where necessary, assume the acceleration of free fall, $g = 10\ \text{m/s}^2$.

DO NOT WRITE IN THIS AREA
DO NOT WRITE IN THIS AREA
DO NOT WRITE IN THIS AREA

www.dynamicpapers.com

DO NOT WRITE IN THIS AREA
DO NOT WRITE IN THIS AREA
DO NOT WRITE IN THIS AREA

BLANK PAGE

www.dynamicpapers.com

Answer ALL questions.

1 (a) This is an incomplete Hertzsprung-Russell diagram.

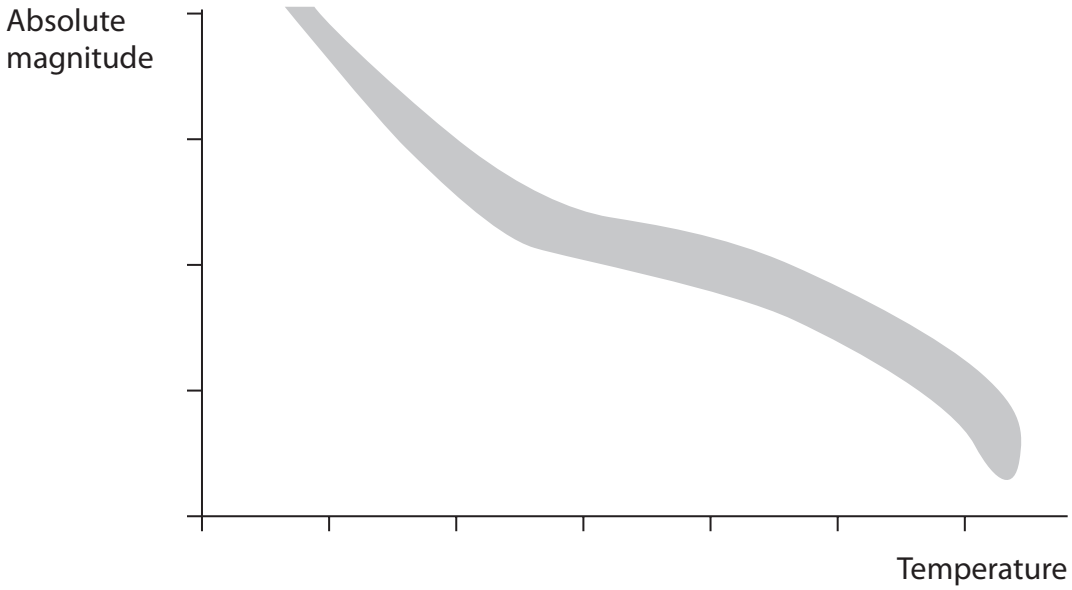

(i) Which of these is in the shaded area of the diagram?

(1)

☒ **A** black holes

☒ **B** main sequence stars

☒ **C** neutron stars

☒ **D** protostars

(ii) On the diagram, draw the area to show the position of white dwarf stars.

Label this area WD.

(1)

(iii) On the diagram, draw the area to show the position of red giant stars.

Label this area RG.

(1)

(iv) State what is meant by the term **absolute magnitude**.

(2)

.....

.....

.....

.....

DO NOT WRITE IN THIS AREA
DO NOT WRITE IN THIS AREA
DO NOT WRITE IN THIS AREA

www.dynamicpapers.com

DO NOT WRITE IN THIS AREA
DO NOT WRITE IN THIS AREA
DO NOT WRITE IN THIS AREA

(b) The Sun emits various parts of the electromagnetic spectrum.

(i) Which part of the electromagnetic spectrum causes damage to human surface skin cells?

(1)

- ☒ **A** microwaves
- ☒ **B** radio waves
- ☒ **C** ultraviolet
- ☒ **D** visible light

(ii) Which of these increases the risk of damage to human surface skin cells?

(1)

- ☒ **A** sunbathing
- ☒ **B** using protective sun cream
- ☒ **C** very cloudy weather
- ☒ **D** wearing sunglasses

(Total for Question 1 = 7 marks)

www.dynamicpapers.com

2 Two students investigate the speed of sound.

Student A has a device that makes a loud sound.

Student B has a stopwatch.

A sound wave travels from student A to the wall and is reflected back to student B.

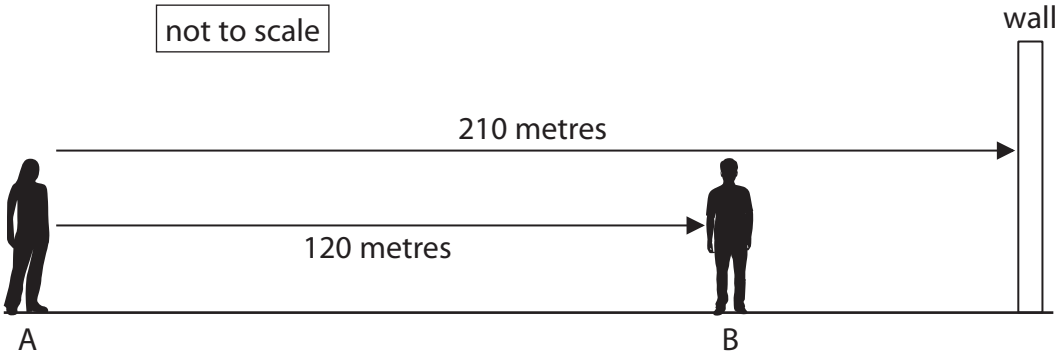

(a) Calculate the total distance the sound wave travels from student A to the wall and back to student B.

(1)

distance = ... m

(b) Student B hears the sound before and after the sound wave reflects from the wall.

When student B hears the sound before reflection, he starts the stopwatch.

When student B hears the sound after reflection, he stops the stopwatch.

The students repeat this experiment five times.

The table shows the students' results.

Time in s				
0.50	0.62	0.52	0.58	0.55

Calculate the mean (average) time.

Give your answer to 2 significant figures.

(2)

mean time = ... s

DO NOT WRITE IN THIS AREA
DO NOT WRITE IN THIS AREA
DO NOT WRITE IN THIS AREA

www.dynamicpapers.com

(c) Calculate the speed of sound for this investigation.

(4)

speed = ... m/s

(d) Suggest a reason why the students' results are not always the same.

(1)

.....

.....

.....

(Total for Question 2 = 8 marks)

DO NOT WRITE IN THIS AREA
DO NOT WRITE IN THIS AREA
DO NOT WRITE IN THIS AREA

www.dynamicpapers.com

3 The diagram shows part of a radio antenna.

The plastic tube protects the radio antenna from bad weather.

Dust particles carried by the wind rub against the plastic tube.

After some time, the dust particles cause the tube to become positively charged.

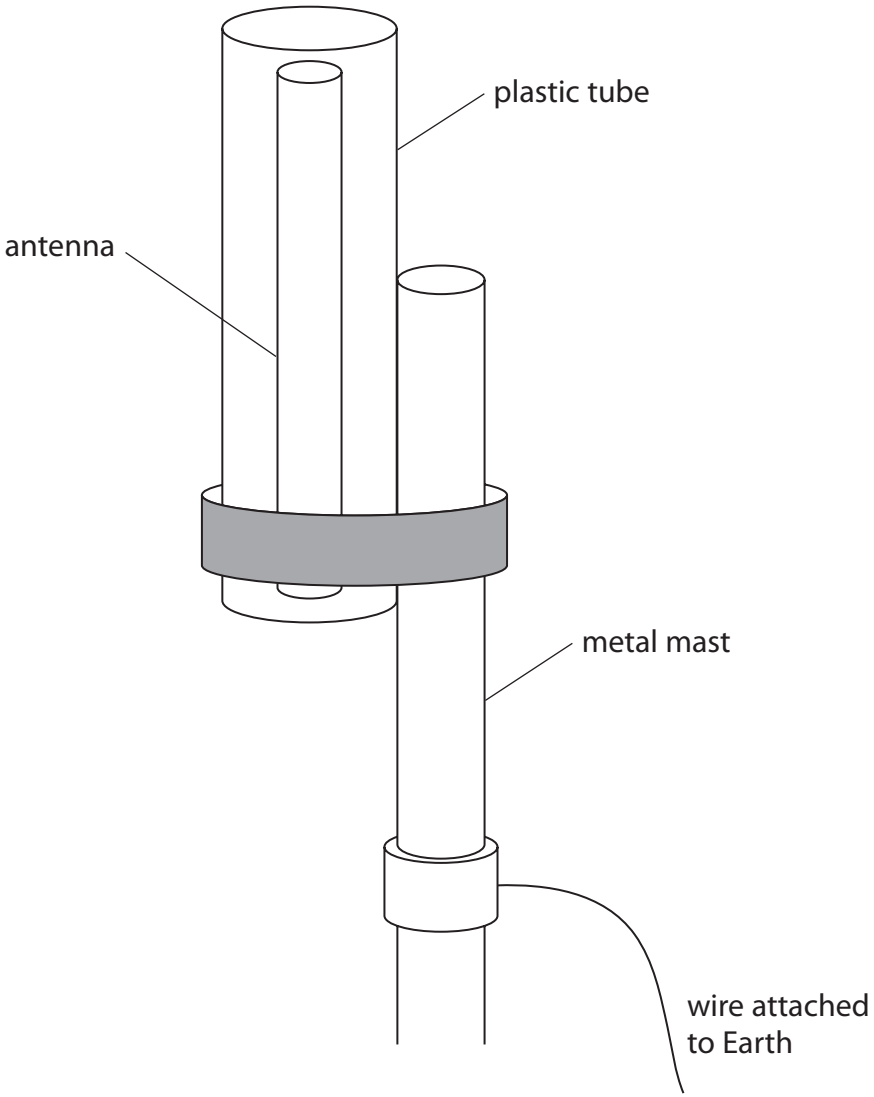

(a) State the property of plastic that allows it to become electrostatically charged.

(1)

.....

(b) Explain how the plastic tube becomes positively charged.

(2)

.....

.....

.....

.....

DO NOT WRITE IN THIS AREA
DO NOT WRITE IN THIS AREA
DO NOT WRITE IN THIS AREA

www.dynamicpapers.com

DO NOT WRITE IN THIS AREA
DO NOT WRITE IN THIS AREA
DO NOT WRITE IN THIS AREA

(c) The plastic tube is attached to a metal mast.

This would cause the metal mast to become positively charged.

Explain why there is a wire connecting the metal mast to the Earth.

(3)

(d) The plastic tube gains a charge of 4.3 mC.

The energy stored on the tube is 3.7 J.

Calculate the voltage between the plastic tube and the metal mast.

(3)

voltage = ... V

(e) An engineer is working on the radio antenna.

Describe the hazard to the engineer if there is no earth wire.

(2)

(Total for Question 3 = 11 marks)

www.dynamicpapers.com

4 (a) A student investigates a sound wave with a frequency of 25 000 Hz.

(i) Calculate the wavelength of this sound wave.

[speed of sound = 330 m/s]

(3)

wavelength = ... m

(ii) The oscilloscope trace represents the sound wave.

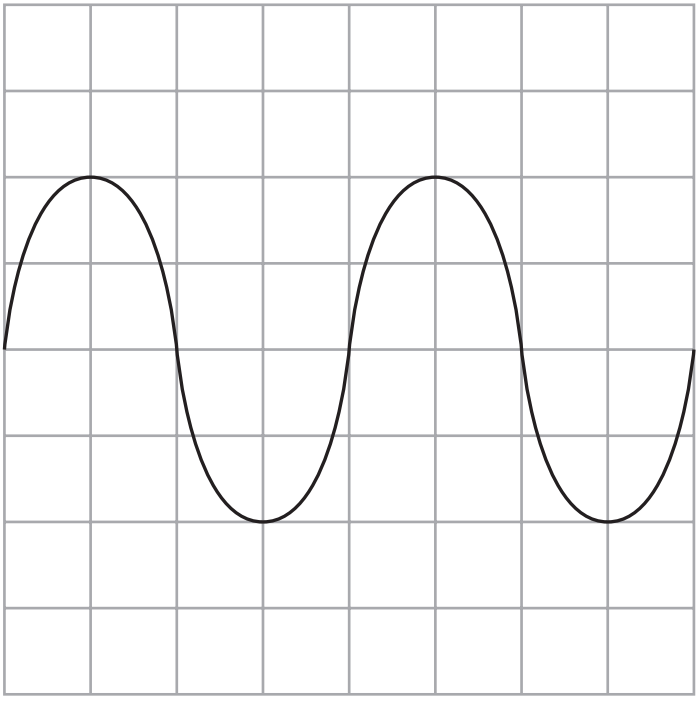

Oscilloscope settings

y direction: 1 square = 5 V

x direction: 1 square = 0.01 ms

Determine the amplitude of the oscilloscope trace.

(2)

amplitude = ... V

DO NOT WRITE IN THIS AREA
DO NOT WRITE IN THIS AREA
DO NOT WRITE IN THIS AREA

www.dynamicpapers.com

(b) (i) Diagram 1 shows a coil of wire wrapped around a cardboard tube.

The coil is fixed to the cardboard tube.

On diagram 1, draw field lines to represent the magnetic field produced when the current is in the direction shown.

(3)

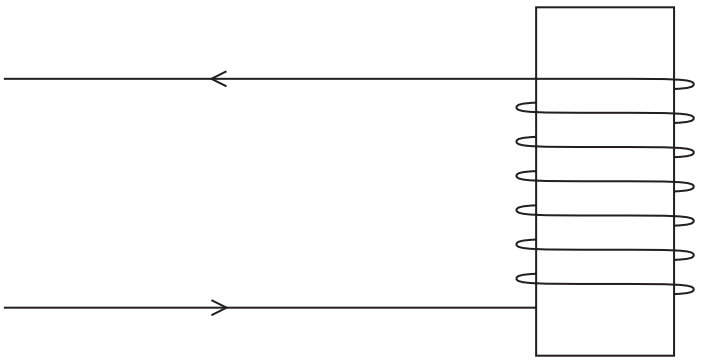

Diagram 1

DO NOT WRITE IN THIS AREA
DO NOT WRITE IN THIS AREA
DO NOT WRITE IN THIS AREA

www.dynamicpapers.com

(ii) Diagram 2 shows a model of a loudspeaker that uses the coil and the cardboard tube.

The cardboard tube is fixed to a thin piece of card, which is clamped at both ends.

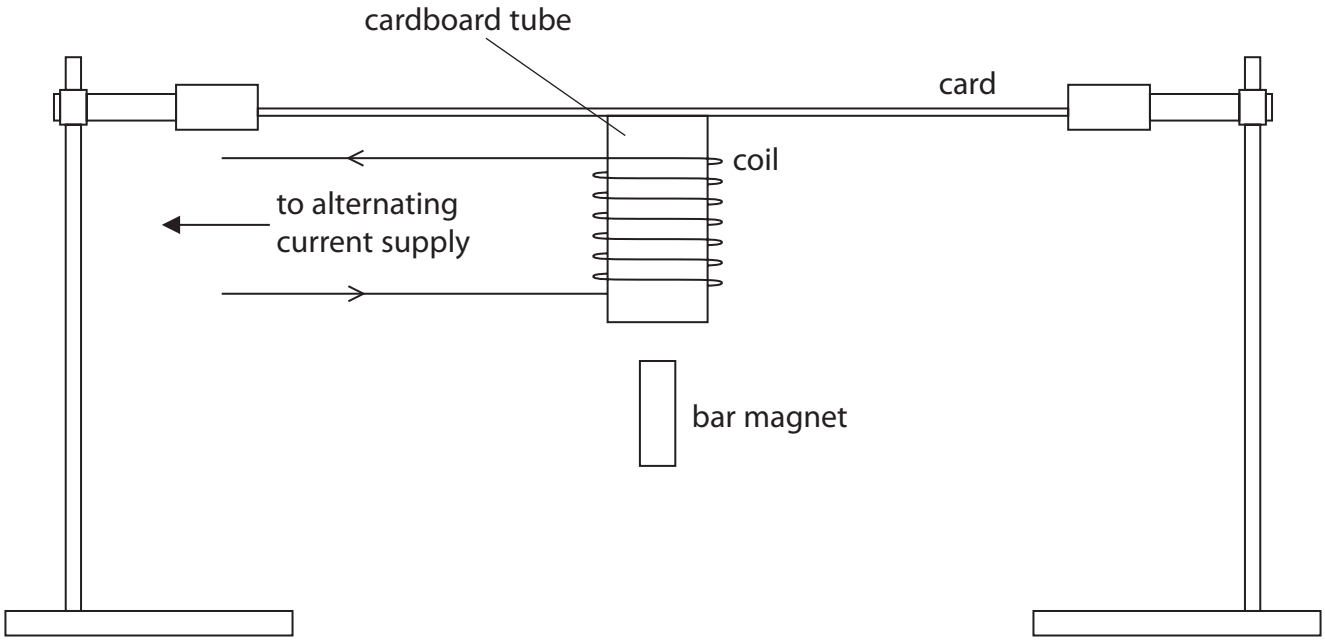

Diagram 2

The student holds a bar magnet near the bottom of the cardboard tube.

Explain why this causes the loudspeaker to produce a sound.

(3)

DO NOT WRITE IN THIS AREA
DO NOT WRITE IN THIS AREA
DO NOT WRITE IN THIS AREA

www.dynamicpapers.com

(iii) When the frequency of the alternating current is 10 kHz, the student hears a sound.

The student increases the frequency of the alternating current to 25 kHz.

Explain why the student cannot hear a sound now, even though the card is still vibrating.

(2)

.....

.....

.....

.....

(iv) Suggest a change to the apparatus that would increase the loudness of the sound when the frequency of the alternating current is 10 kHz.

(1)

.....

.....

(Total for Question 4 = 14 marks)

DO NOT WRITE IN THIS AREA
DO NOT WRITE IN THIS AREA
DO NOT WRITE IN THIS AREA

www.dynamicpapers.com

BLANK PAGE

DO NOT WRITE IN THIS AREA
DO NOT WRITE IN THIS AREA
DO NOT WRITE IN THIS AREA

www.dynamicpapers.com

DO NOT WRITE IN THIS AREA
DO NOT WRITE IN THIS AREA
DO NOT WRITE IN THIS AREA

5 The diagram shows some of the apparatus a student uses to investigate the effect of heating a solid substance.

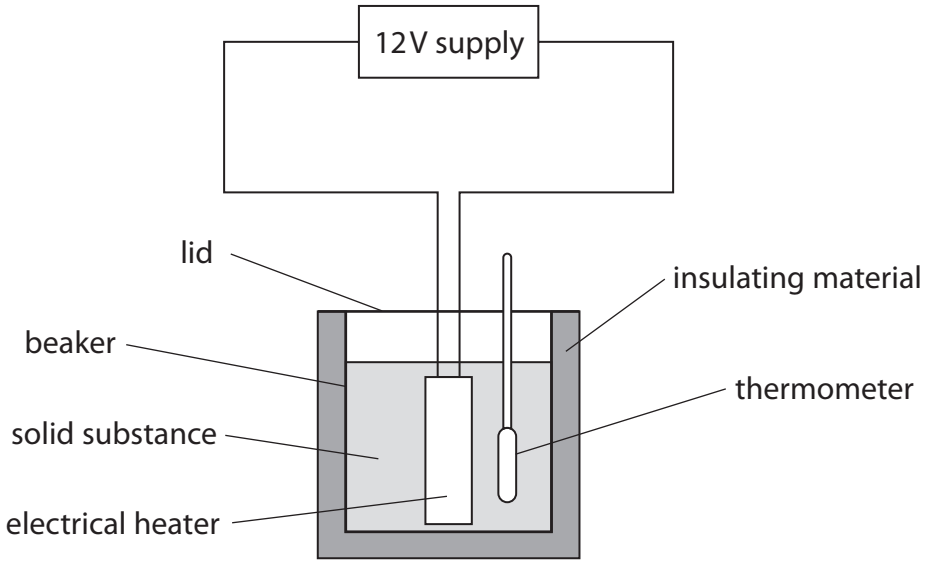

(a) Describe how the student could use their apparatus to help determine the specific heat capacity of the substance.

You should give details of any additional apparatus needed in your answer.

(5)

www.dynamicpapers.com

(b) The student continues to heat the substance, keeping the power of the heater constant.

The graph shows how the temperature of the substance changes with time.

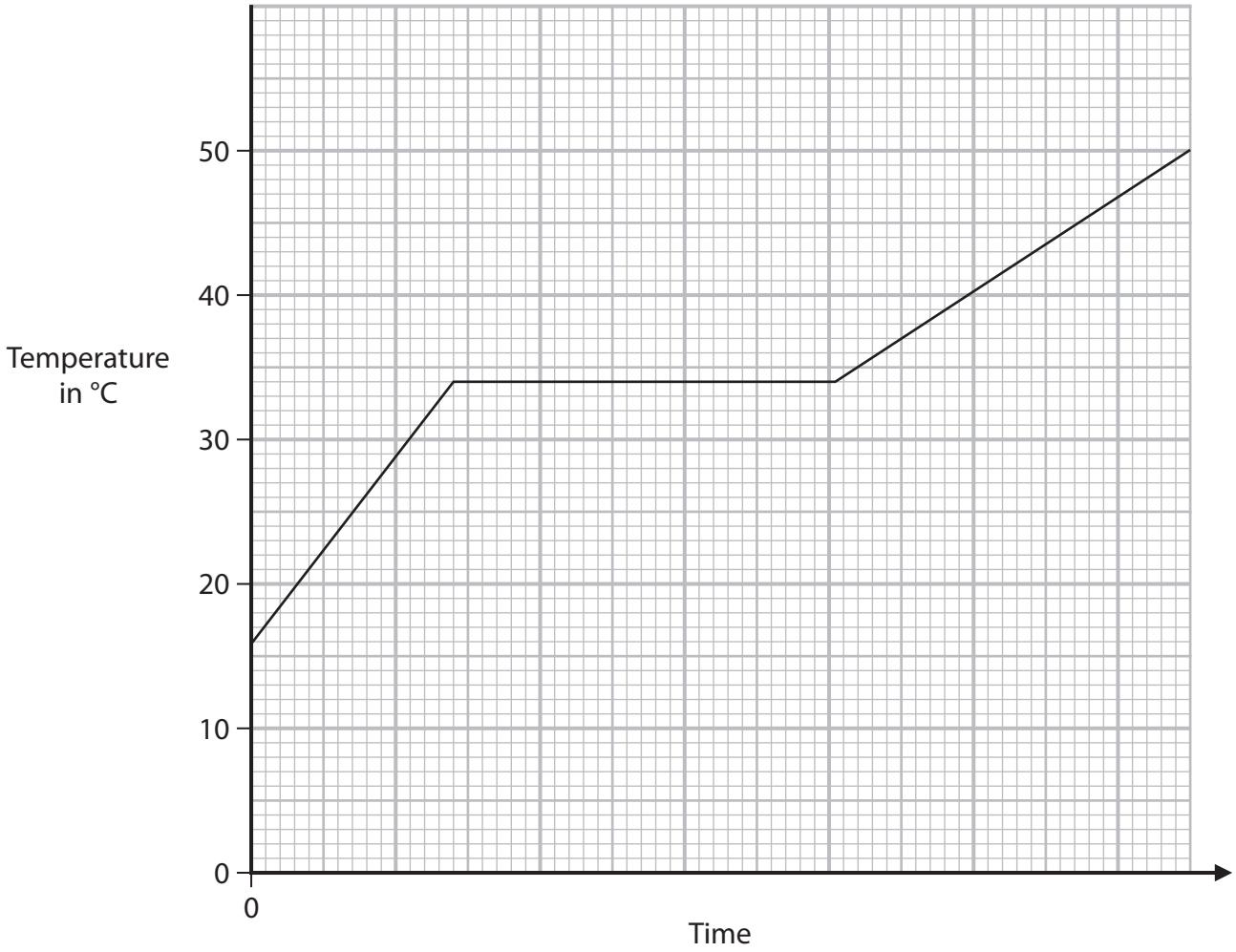

(i) Use the graph to determine the melting point of this substance.

(1)

melting point = ... °C

(ii) Describe, in terms of particles, what is happening in the substance when the graph line is horizontal.

(2)

.....

.....

.....

.....

DO NOT WRITE IN THIS AREA
DO NOT WRITE IN THIS AREA
DO NOT WRITE IN THIS AREA

www.dynamicpapers.com

(iii) Suggest why the two non-horizontal lines on the graph have different gradients.

(2)

.....

.....

.....

.....

(Total for Question 5 = 10 marks)

DO NOT WRITE IN THIS AREA
DO NOT WRITE IN THIS AREA
DO NOT WRITE IN THIS AREA

www.dynamicpapers.com

6 This is a question about a nuclear fusion power station.

(a) Explain what happens during nuclear fusion.

(3)

(b) The diagram shows how a fusion power station could supply the National Grid in the future.

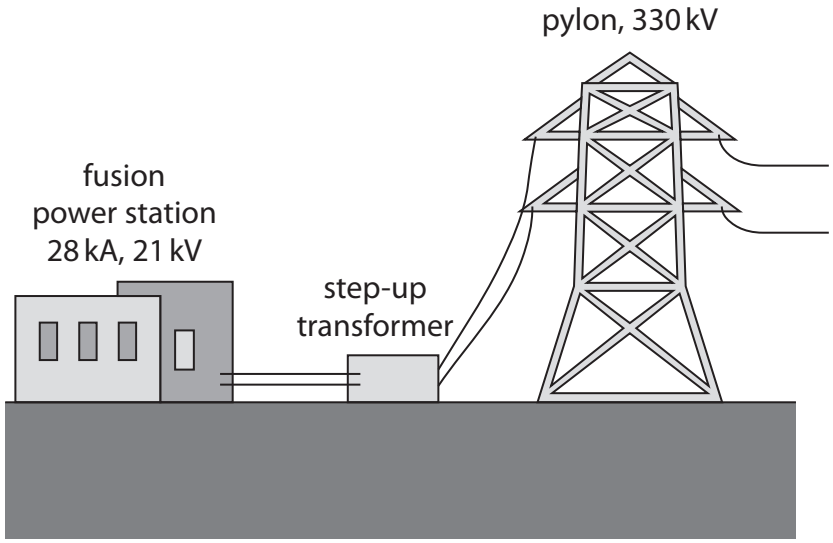

(i) State the main method of energy transfer from the fusion power station generator to the primary coil of the step-up transformer.

(1)

DO NOT WRITE IN THIS AREA
DO NOT WRITE IN THIS AREA
DO NOT WRITE IN THIS AREA

www.dynamicpapers.com

(ii) The fusion power station could supply the input coil of the step-up transformer with a current of 28 kA at a voltage of 21 kV.

The output coil of the transformer has a voltage of 330 kV.

Assume the transformer is 100% efficient.

Calculate the current in the output coil of the transformer.

(3)

current = ... kA

(Total for Question 6 = 7 marks)

DO NOT WRITE IN THIS AREA
DO NOT WRITE IN THIS AREA
DO NOT WRITE IN THIS AREA

www.dynamicpapers.com

7 The diagram shows two blocks at rest on a table, viewed from above.

A spring is attached to the large block.

The small block is attached by a piece of string to a fixed point on the table.

A student pushes the two blocks together so that the spring is compressed.

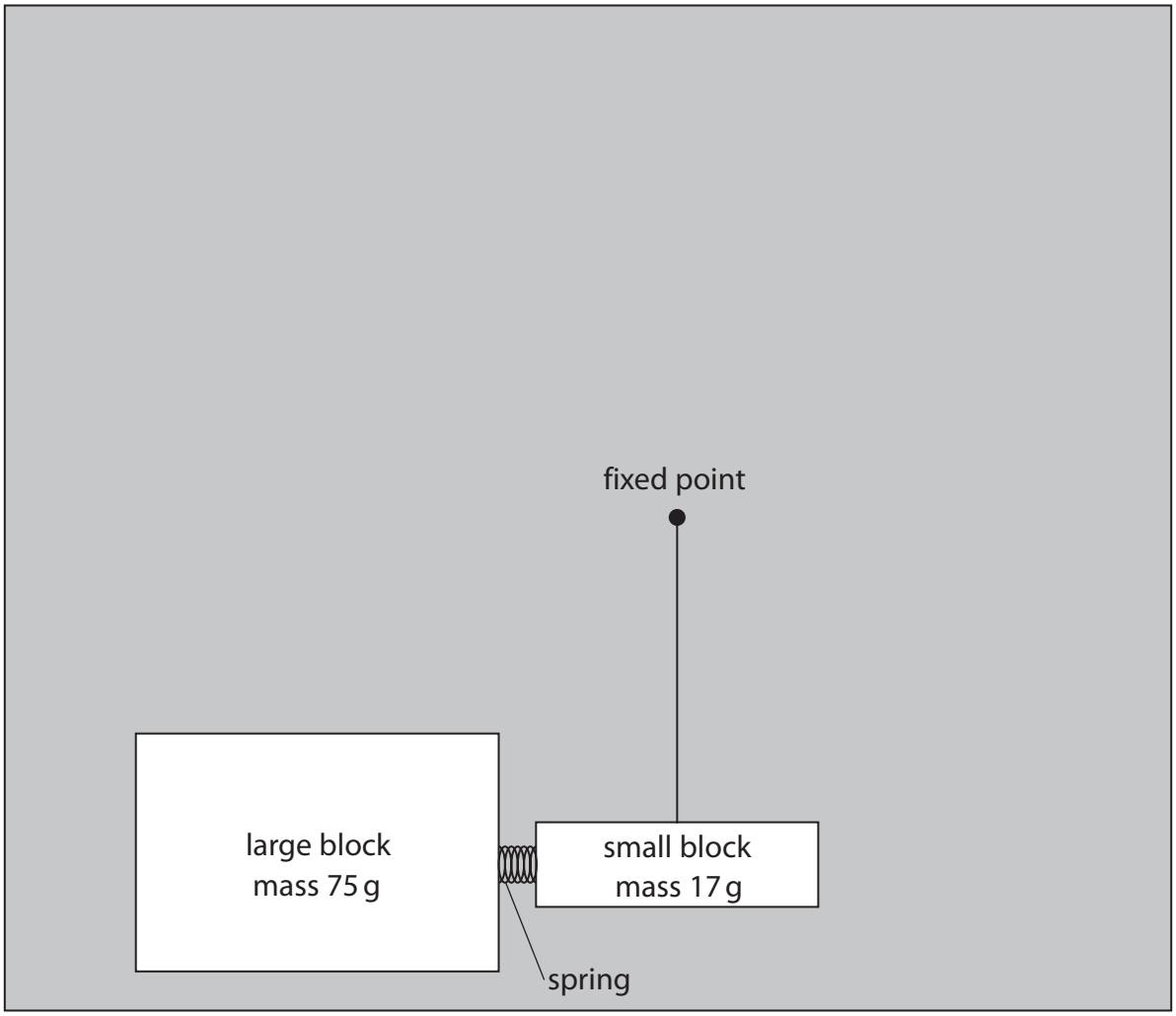

(a) The student releases the blocks.

The kinetic energy (KE) store of the small block is 0.29 J when the blocks are no longer in contact.

Show that the speed of the small block is about 6 m/s.

(3)

DO NOT WRITE IN THIS AREA
DO NOT WRITE IN THIS AREA
DO NOT WRITE IN THIS AREA

www.dynamicpapers.com

DO NOT WRITE IN THIS AREA
DO NOT WRITE IN THIS AREA
DO NOT WRITE IN THIS AREA

(b) Using ideas about momentum, show that the speed of the large block is about 1 m/s after the blocks are no longer in contact.

(4)

(c) The small block takes 0.11 s to reach 6 m/s.

Calculate the mean force exerted on the small block by the spring.

(3)

mean force = ... N

QUESTION 7 CONTINUES ON NEXT PAGE

www.dynamicpapers.com

(d) The small block then moves around the fixed point on the table.

The block moves in a circular orbit of radius 17.6 cm at a constant orbital speed of 6 m/s.

The time period of the orbit can be found using the formula

$$\text{orbital speed} = \frac{2\pi \times \text{orbital radius}}{\text{time period}}$$

Calculate the time period of the orbit.

(3)

time period = ... s

(Total for Question 7 = 13 marks)

TOTAL FOR PAPER = 70 MARKS

DO NOT WRITE IN THIS AREA
DO NOT WRITE IN THIS AREA
DO NOT WRITE IN THIS AREA

www.dynamicpapers.com

DO NOT WRITE IN THIS AREA
DO NOT WRITE IN THIS AREA
DO NOT WRITE IN THIS AREA

BLANK PAGE

www.dynamicpapers.com

DO NOT WRITE IN THIS AREA

DO NOT WRITE IN THIS AREA

DO NOT WRITE IN THIS AREA

BLANK PAGE