www.dynamicpapers.com

Please check the examination details below before entering your candidate information

Candidate surname	Other names

Pearson Edexcel
International
Advanced Level

Centre Number | | | | | |

Candidate Number | | | | |

Tuesday 21 January 2020

Afternoon (Time: 1 hour 30 minutes) | Paper Reference **WME01/01**

Mathematics

International Advanced Subsidiary/Advanced Level
Mechanics M1

You must have:
Mathematical Formulae and Statistical Tables (Blue), calculator

Total Marks

Candidates may use any calculator permitted by Pearson regulations. Calculators must not have the facility for symbolic algebra manipulation, differentiation and integration, or have retrievable mathematical formulae stored in them.

Instructions

- Use **black** ink or ball-point pen.
- If pencil is used for diagrams/sketches/graphs it must be dark (HB or B).
- **Fill in the boxes** at the top of this page with your name, centre number and candidate number.
- Answer **all** questions and ensure that your answers to parts of questions are clearly labelled.
- Answer the questions in the spaces provided
  – *there may be more space than you need.*
- You should show sufficient working to make your methods clear.
  Answers without working may not gain full credit.
- Whenever a numerical value of g is required, take $g = 9.8$ m s^{-2}, and give your answer to either 2 significant figures or 3 significant figures.

Information

- A booklet 'Mathematical Formulae and Statistical Tables' is provided.
- There are 7 questions in this question paper. The total mark for this paper is 75.
- The marks for each question are shown in brackets
  – *use this as a guide as to how much time to spend on each question.*

Advice

- Read each question carefully before you start to answer it.
- Try to answer every question.
- Check your answers if you have time at the end.
- If you change your mind about an answer, cross it out and put your new answer and any working underneath.

Turn over ▶

P61293A

©2020 Pearson Education Ltd.

1/1/1/

P 6 1 2 9 3 A 0 1 2 4

Pearson

www.dynamicpapers.com

Leave blank

1. Two particles, P and Q, of mass m_1 and m_2 respectively, are moving on a smooth horizontal plane. The particles are moving towards each other in opposite directions along the same straight line when they collide directly. Immediately before the collision, both particles are moving with speed u.

The direction of motion of each particle is reversed by the collision.

Immediately after the collision, the speed of Q is $\frac{1}{3}u$.

(a) Find, in terms of m_2 and u, the magnitude of the impulse exerted by P on Q in the collision.

(3)

(b) Find, in terms of m_1, m_2 and u, the speed of P immediately after the collision.

(3)

(c) Hence show that $m_2 > \frac{3}{4} m_1$

(2)

DO NOT WRITE IN THIS AREA
DO NOT WRITE IN THIS AREA
DO NOT WRITE IN THIS AREA

www.dynamicpapers.com

Leave blank

Question 1 continued

Q1

(Total 8 marks)

DO NOT WRITE IN THIS AREA
DO NOT WRITE IN THIS AREA
DO NOT WRITE IN THIS AREA

www.dynamicpapers.com

Leave blank

2.

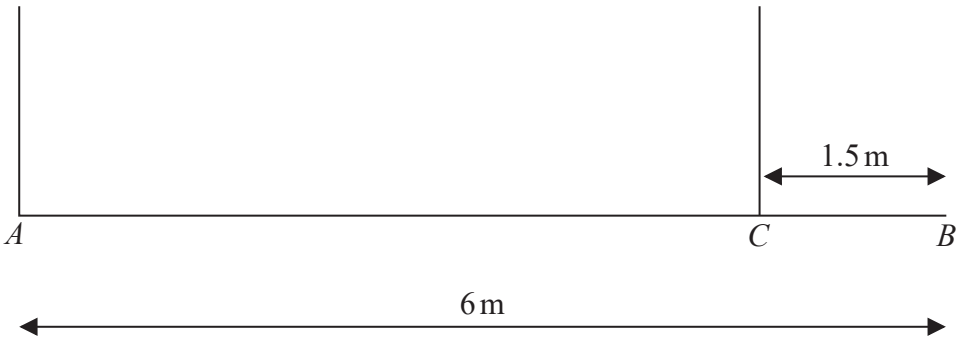

Figure 1

A non-uniform beam AB has length 6 m and weight W newtons. The beam is supported in equilibrium in a horizontal position by two vertical ropes, one attached to the beam at A and the other attached to the beam at C, where $CB = 1.5$ m, as shown in Figure 1.

The centre of mass of the beam is 2.625 m from A.

The ropes are modelled as light strings. The beam is modelled as a non-uniform rod.

Given that the tension in the rope attached at C is 20 N greater than the tension in the rope attached at A,

(a) find the value of W.

(6)

(b) State how you have used the fact that the beam is modelled as a rod.

(1)

DO NOT WRITE IN THIS AREA
DO NOT WRITE IN THIS AREA
DO NOT WRITE IN THIS AREA

www.dynamicpapers.com

Leave blank

Question 2 continued

Q2

(Total 7 marks)

DO NOT WRITE IN THIS AREA
DO NOT WRITE IN THIS AREA
DO NOT WRITE IN THIS AREA

www.dynamicpapers.com

Leave blank

3. A particle, P, is projected vertically upwards with speed U from a fixed point O. At the instant when P reaches its greatest height H above O, a second particle, Q, is projected with speed $\frac{1}{2}U$ vertically upwards from O.

(a) Find H in terms of U and g.

(2)

(b) Find, in terms of U and g, the time between the instant when Q is projected and the instant when the two particles collide.

(6)

(c) Find where the two particles collide.

(3)

DO NOT WRITE IN THIS AREA
DO NOT WRITE IN THIS AREA
DO NOT WRITE IN THIS AREA

www.dynamicpapers.com

Leave blank

Question 3 continued

DO NOT WRITE IN THIS AREA
DO NOT WRITE IN THIS AREA
DO NOT WRITE IN THIS AREA

www.dynamicpapers.com

Leave blank

Question 3 continued

DO NOT WRITE IN THIS AREA
DO NOT WRITE IN THIS AREA
DO NOT WRITE IN THIS AREA

www.dynamicpapers.com

Leave blank

Question 3 continued

(Total 11 marks)

Q3

DO NOT WRITE IN THIS AREA
DO NOT WRITE IN THIS AREA
DO NOT WRITE IN THIS AREA

www.dynamicpapers.com

Leave blank

4.

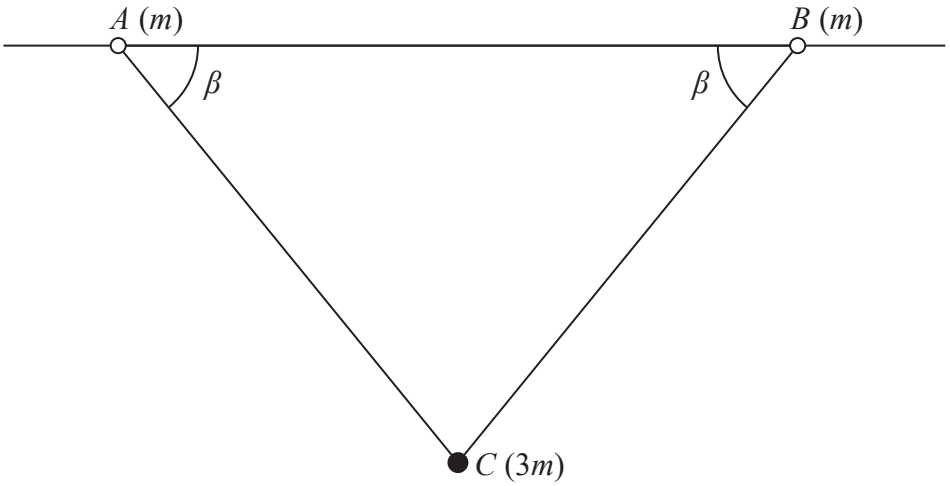

Figure 2

Two identical small rings, A and B, each of mass m, are threaded onto a rough horizontal wire. The rings are connected by a light inextensible string. A particle C of mass $3m$ is attached to the midpoint of the string. The particle C hangs in equilibrium below the wire with angle $BAC = \beta$, as shown in Figure 2.

The tension in each of the parts, AC and BC, of the string is T

(a) By considering particle C, find T in terms of m, g and β

(2)

(b) Find, in terms of m and g, the magnitude of the normal reaction between the wire and A.

(3)

The coefficient of friction between each ring and the wire is $\frac{4}{5}$

The two rings, A and B, are on the point of sliding along the wire towards each other.

(c) Find the value of $\tan\beta$

(5)

DO NOT WRITE IN THIS AREA
DO NOT WRITE IN THIS AREA
DO NOT WRITE IN THIS AREA

www.dynamicpapers.com

Leave blank

Question 4 continued

DO NOT WRITE IN THIS AREA
DO NOT WRITE IN THIS AREA
DO NOT WRITE IN THIS AREA

www.dynamicpapers.com

Leave blank

Question 4 continued

DO NOT WRITE IN THIS AREA
DO NOT WRITE IN THIS AREA
DO NOT WRITE IN THIS AREA

www.dynamicpapers.com

Leave blank

Question 4 continued

(Total 10 marks)

Q4

DO NOT WRITE IN THIS AREA
DO NOT WRITE IN THIS AREA
DO NOT WRITE IN THIS AREA

www.dynamicpapers.com

Leave blank

5. A car travels at a constant speed of $40\,m\,s^{-1}$ in a straight line along a horizontal racetrack. At time $t = 0$, the car passes a motorcyclist who is at rest. The motorcyclist immediately sets off to catch up with the car.

The motorcyclist accelerates at $4\,m\,s^{-2}$ for 15 s and then accelerates at $1\,m\,s^{-2}$ for a further T seconds until he catches up with the car.

(a) Sketch, on the same axes, the speed-time graph for the motion of the car and the speed-time graph for the motion of the motorcyclist, from time $t = 0$ to the instant when the motorcyclist catches up with the car.

(2)

At the instant when $t = t_1$ seconds, the car and the motorcyclist are moving at the same speed.

(b) Find the value of t_1

(2)

(c) Show that $T^2 + kT - 300 = 0$, where k is a constant to be found.

(6)

DO NOT WRITE IN THIS AREA
DO NOT WRITE IN THIS AREA
DO NOT WRITE IN THIS AREA

www.dynamicpapers.com

Leave blank

Question 5 continued

DO NOT WRITE IN THIS AREA
DO NOT WRITE IN THIS AREA
DO NOT WRITE IN THIS AREA

www.dynamicpapers.com

Leave blank

Question 5 continued

DO NOT WRITE IN THIS AREA
DO NOT WRITE IN THIS AREA
DO NOT WRITE IN THIS AREA

www.dynamicpapers.com

Leave blank

Question 5 continued

Q5

(Total 10 marks)

DO NOT WRITE IN THIS AREA
DO NOT WRITE IN THIS AREA
DO NOT WRITE IN THIS AREA

www.dynamicpapers.com

Leave blank

6. A force **F** is given by **F** = (10**i** + **j**) N.

(a) Find the exact value of the magnitude of **F**.

(2)

(b) Find, in degrees, the size of the angle between the direction of **F** and the direction of the vector (**i** + **j**).

(4)

The resultant of the force **F** and the force (–15**i** + *a***j**) N, where *a* is a constant, is parallel to, but in the opposite direction to, the vector (2**i** – 3**j**).

(c) Find the value of *a*.

(5)

DO NOT WRITE IN THIS AREA
DO NOT WRITE IN THIS AREA
DO NOT WRITE IN THIS AREA

www.dynamicpapers.com

Leave blank

Question 6 continued

Q6

(Total 11 marks)

DO NOT WRITE IN THIS AREA
DO NOT WRITE IN THIS AREA
DO NOT WRITE IN THIS AREA

www.dynamicpapers.com

Leave blank

7.

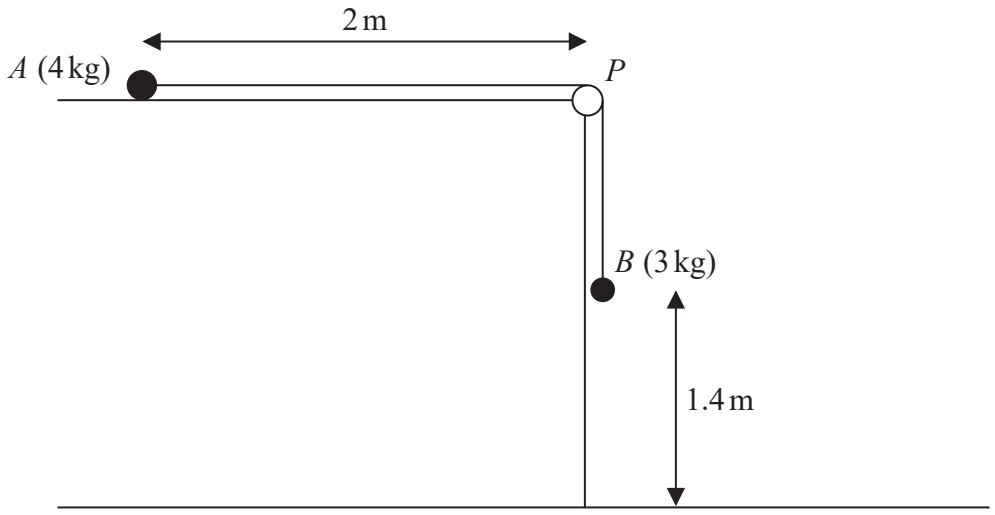

Figure 3

A particle A of mass 4 kg is held at rest on a rough horizontal table. Particle A is attached to one end of a string that passes over a pulley P. The pulley is fixed at the edge of the table. The other end of the string is attached to a particle B, of mass 3 kg, which hangs freely below P.

The part of the string from A to P is perpendicular to the edge of the table and A, P and B all lie in the same vertical plane.

The string is modelled as being light and inextensible and the pulley is modelled as being small, smooth and light.

The system is released from rest with the string taut. At the instant of release, A is 2 m from the edge of the table and B is 1.4 m above a horizontal floor, as shown in Figure 3.

After descending with constant acceleration for 2 seconds, B hits the floor and does not rebound.

(a) Show that the acceleration of A before B hits the floor is $0.7\,\text{m s}^{-2}$

(2)

(b) State which of the modelling assumptions you have used in order to answer part (a).

(1)

(c) Find the magnitude of the resultant force exerted on the pulley by the string.

(4)

The coefficient of friction between A and the table is μ.

(d) Find the value of μ.

(6)

(e) Determine, by calculation, whether or not A reaches the pulley.

(5)

DO NOT WRITE IN THIS AREA
DO NOT WRITE IN THIS AREA
DO NOT WRITE IN THIS AREA

www.dynamicpapers.com

Leave blank

Question 7 continued

DO NOT WRITE IN THIS AREA
DO NOT WRITE IN THIS AREA
DO NOT WRITE IN THIS AREA

www.dynamicpapers.com

Leave blank

Question 7 continued

DO NOT WRITE IN THIS AREA
DO NOT WRITE IN THIS AREA
DO NOT WRITE IN THIS AREA

www.dynamicpapers.com

Leave blank

Question 7 continued

DO NOT WRITE IN THIS AREA
DO NOT WRITE IN THIS AREA
DO NOT WRITE IN THIS AREA

www.dynamicpapers.com

Leave blank

Question 7 continued

Q7

(Total 18 marks)

TOTAL FOR PAPER: 75 MARKS

END

DO NOT WRITE IN THIS AREA
DO NOT WRITE IN THIS AREA
DO NOT WRITE IN THIS AREA