www.dynamicpapers.com

Please check the examination details below before entering your candidate information

| Candidate surname | Other names |
|---|---|
| | |

**Pearson Edexcel International GCSE**

Centre Number | | | | | |

Candidate Number | | | | |

# Tuesday 3 November 2020

Morning (Time: 2 hours) | Paper Reference **4MA1/1HR**

# Mathematics A

## Paper 1HR
## Higher Tier



**You must have:**
Ruler graduated in centimetres and millimetres, protractor, pair of compasses, pen, HB pencil, eraser, calculator. Tracing paper may be used.

Total Marks

## Instructions

- Use **black** ink or ball-point pen.
- **Fill in the boxes** at the top of this page with your name, centre number and candidate number.
- Answer **all** questions.
- Without sufficient working, correct answers may be awarded no marks.
- Answer the questions in the spaces provided
  – *there may be more space than you need.*
- **Calculators may be used.**
- You must **NOT** write anything on the formulae page.
  Anything you write on the formulae page will gain NO credit.

## Information

- The total mark for this paper is 100.
- The marks for **each** question are shown in brackets
  – *use this as a guide as to how much time to spend on each question.*

## Advice

- Read each question carefully before you start to answer it.
- Check your answers if you have time at the end.

*Turn over* ▶

P62653A

©2020 Pearson Education Ltd.

1/1/1/

P 6 2 6 5 3 A 0 1 2 4

Pearson

**International GCSE Mathematics**

**Formulae sheet – Higher Tier**

**Arithmetic series**

Sum to $n$ terms, $S_n = \frac{n}{2}[2a + (n-1)d]$

**The quadratic equation**

The solutions of $ax^2 + bx + c = 0$ where $a \neq 0$ are given by:

$$x = \frac{-b \pm \sqrt{b^2 - 4ac}}{2a}$$

**Area of trapezium** $= \frac{1}{2}(a+b)h$

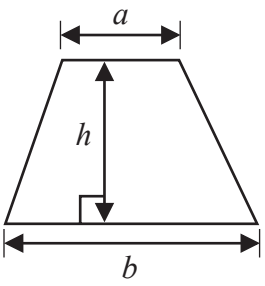


**Trigonometry**

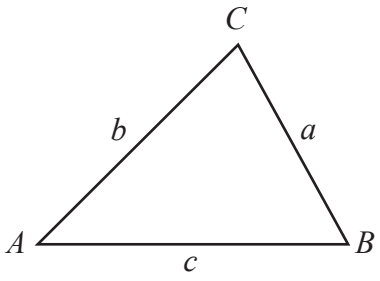


**In any triangle** ***ABC***

**Sine Rule** $\frac{a}{\sin A} = \frac{b}{\sin B} = \frac{c}{\sin C}$

**Cosine Rule** $a^2 = b^2 + c^2 - 2bc\cos A$

**Area of triangle** $= \frac{1}{2}ab\sin C$

**Volume of cone** $= \frac{1}{3}\pi r^2 h$

**Curved surface area of cone** $= \pi rl$

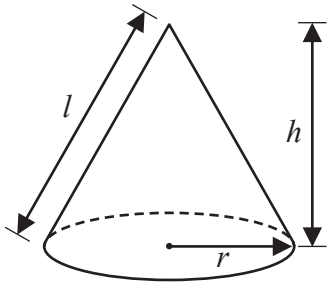


**Volume of prism**
= area of cross section × length

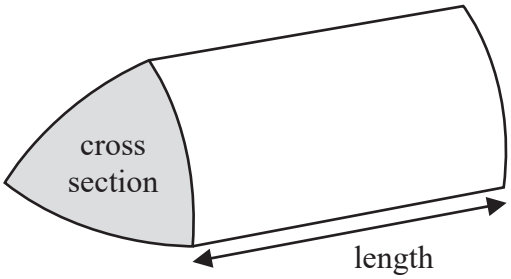


**Volume of cylinder** $= \pi r^2 h$
**Curved surface area of cylinder** $= 2\pi rh$

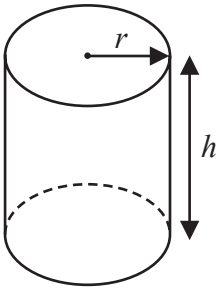


**Volume of sphere** $= \frac{4}{3}\pi r^3$

**Surface area of sphere** $= 4\pi r^2$

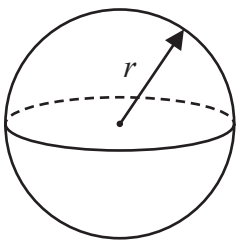


DO NOT WRITE IN THIS AREA
DO NOT WRITE IN THIS AREA
DO NOT WRITE IN THIS AREA

**Answer ALL TWENTY THREE questions.**

**Write your answers in the spaces provided.**

**You must write down all the stages in your working.**

**1** Show that $3\frac{3}{4} \times \frac{7}{9} = 2\frac{11}{12}$

**(Total for Question 1 is 3 marks)**

**2** Using ruler and compasses only, construct the bisector of angle *ABC*.
You must show all your construction lines.

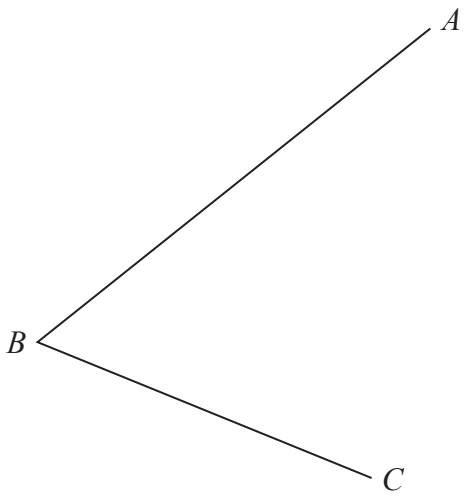


**(Total for Question 2 is 2 marks)**

DO NOT WRITE IN THIS AREA
DO NOT WRITE IN THIS AREA
DO NOT WRITE IN THIS AREA

**3** (a) Simplify $h^7 \times h^2$

.....

**(1)**

$G = c^2 - 4c$

(b) Find the value of $G$ when $c = -5$

$G =$ .....

**(2)**

(c) Solve $\dfrac{5x - 3}{4} = 2x + 3$

Show clear algebraic working.

$x =$ .....

**(3)**

**(Total for Question 3 is 6 marks)**

DO NOT WRITE IN THIS AREA

DO NOT WRITE IN THIS AREA

DO NOT WRITE IN THIS AREA

**4** The table gives information about the length of time, in minutes, that each of 60 students took to travel to school on Monday.

| Length of time ($t$ minutes) | Frequency |
|---|---|
| $0 < t \leqslant 10$ | 4 |
| $10 < t \leqslant 20$ | 10 |
| $20 < t \leqslant 30$ | 15 |
| $30 < t \leqslant 40$ | 25 |
| $40 < t \leqslant 50$ | 6 |

(a) Write down the modal class interval.

.....

**(1)**

(b) Work out an estimate for the mean length of time taken by these 60 students to travel to school on Monday.
Give your answer correct to one decimal place.

..... minutes

**(4)**

**(Total for Question 4 is 5 marks)**

DO NOT WRITE IN THIS AREA
DO NOT WRITE IN THIS AREA
DO NOT WRITE IN THIS AREA

**5** In 2017, the population of a village was 7500
In 2019, the population of the village was 8265

(a) Work out the percentage increase in the population of the village from 2017 to 2019

.....%

**(3)**

In a sale, normal prices are reduced by 30%
The sale price of a T-shirt was 31.50 euros.

(b) Work out the normal price of the T-shirt.

..... euros

**(3)**

**(Total for Question 5 is 6 marks)**

DO NOT WRITE IN THIS AREA
DO NOT WRITE IN THIS AREA
DO NOT WRITE IN THIS AREA

**6** Point $A$ has coordinates $(-3, 11)$
Point $B$ has coordinates $(47, b)$
The midpoint of $AB$ has coordinates $(a, -19)$

Find the value of $a$ and the value of $b$.

$a =$ .....

$b =$ .....

**(Total for Question 6 is 2 marks)**

**7** Pedro drove from Toulouse to Montpellier in 2 hours 42 minutes.
He drove at an average speed of 90 km/hour.

Janine drove from Toulouse to Montpellier along the same route as Pedro.
The journey took her 3 hours.

Work out Janine's average speed for the journey.

..... km/hour

**(Total for Question 7 is 4 marks)**

DO NOT WRITE IN THIS AREA
DO NOT WRITE IN THIS AREA
DO NOT WRITE IN THIS AREA

**8** Harold bought an antique clock for £1200
The clock increased in value by 8% per year.

Find the value of the clock exactly 3 years after Harold bought the clock.
Give your answer correct to the nearest £.

£.....

**(Total for Question 8 is 3 marks)**

**9** A box is put on a horizontal table.

The face of the box in contact with the table is a square of side 1.5 metres.
The pressure on the table due to the box is 34.8 newtons/$m^2$

Work out the force exerted by the box on the table.

$$\text{pressure} = \frac{\text{force}}{\text{area}}$$

..... newtons

**(Total for Question 9 is 3 marks)**

DO NOT WRITE IN THIS AREA
DO NOT WRITE IN THIS AREA
DO NOT WRITE IN THIS AREA

**10** Alex makes 80 cakes to sell.
He makes chocolate cakes, lemon cakes and fruit cakes where

$$\begin{matrix}\text{number of}\\\text{chocolate cakes}\end{matrix} : \begin{matrix}\text{number of}\\\text{lemon cakes}\end{matrix} : \begin{matrix}\text{number of}\\\text{fruit cakes}\end{matrix} = 3 : 2 : 5$$

Alex sells

all of the chocolate cakes

$\frac{3}{4}$ of the lemon cakes

$\frac{7}{8}$ of the fruit cakes

The profit he makes on each cake he sells is shown in the table.

| Type of cake | Profit per cake he sells |
|---|---|
| chocolate | £2.00 |
| lemon | £1.70 |
| fruit | £2.40 |

Work out the total profit that Alex makes from the cakes he sells.

£.....

**(Total for Question 10 is 5 marks)**

**11** The frequency table gives information about the ages of the 80 people in a train carriage.

| Age ($a$ years) | Frequency |
|---|---|
| $0 < a \leqslant 20$ | 9 |
| $20 < a \leqslant 30$ | 19 |
| $30 < a \leqslant 40$ | 17 |
| $40 < a \leqslant 50$ | 18 |
| $50 < a \leqslant 60$ | 13 |
| $60 < a \leqslant 70$ | 4 |

(a) Complete the cumulative frequency table.

| Age ($a$ years) | Cumulative frequency |
|---|---|
| $0 < a \leqslant 20$ | |
| $0 < a \leqslant 30$ | |
| $0 < a \leqslant 40$ | |
| $0 < a \leqslant 50$ | |
| $0 < a \leqslant 60$ | |
| $0 < a \leqslant 70$ | |

**(1)**

DO NOT WRITE IN THIS AREA
DO NOT WRITE IN THIS AREA
DO NOT WRITE IN THIS AREA

(b) On the grid, draw a cumulative frequency graph for your table.

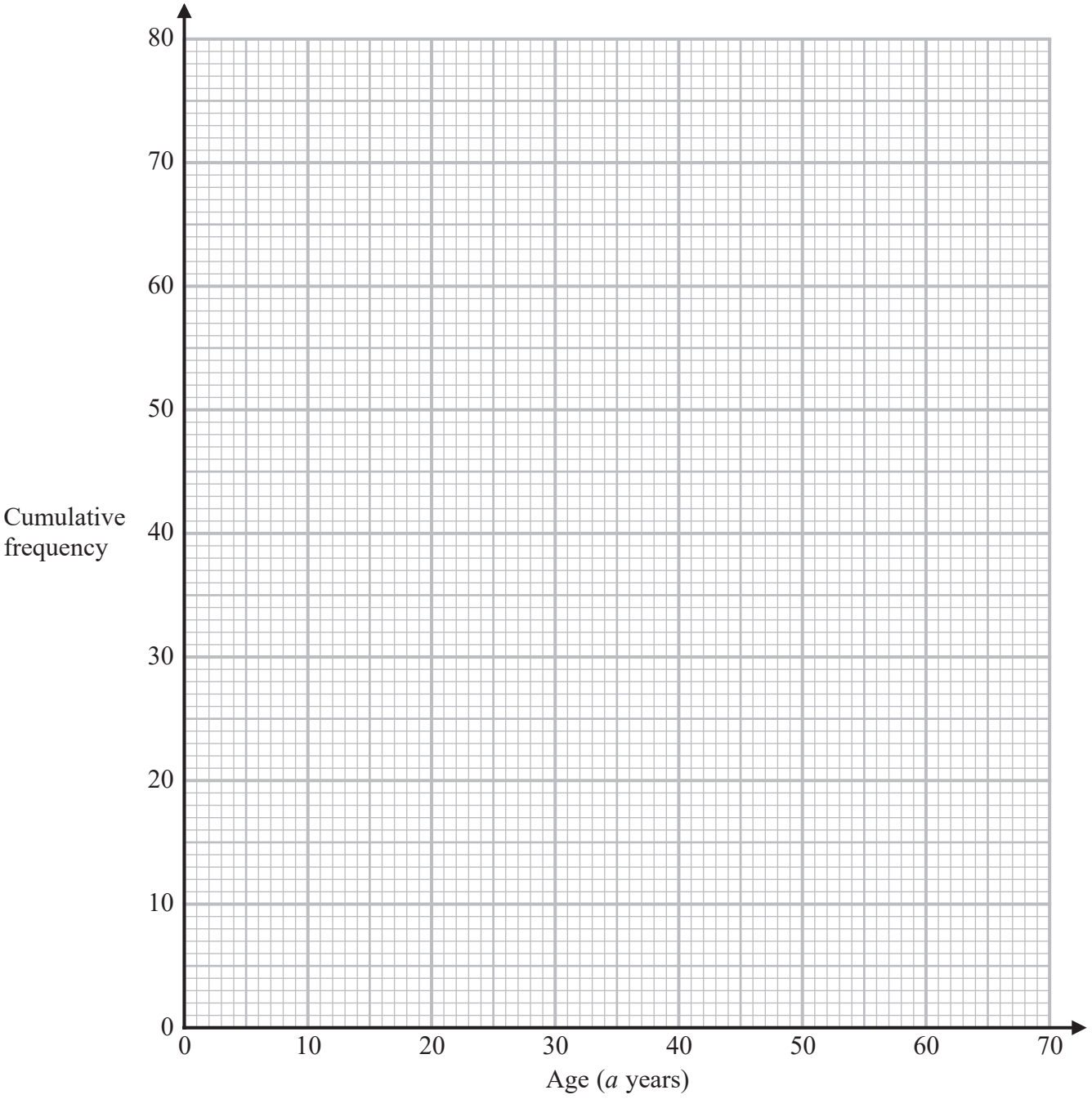


**(2)**

(c) Use your graph to find an estimate for the median age of the people in the train carriage.

..... years

**(2)**

**(Total for Question 11 is 5 marks)**

DO NOT WRITE IN THIS AREA
DO NOT WRITE IN THIS AREA
DO NOT WRITE IN THIS AREA

**12** Solve the simultaneous equations

$$7x + 2y = 5.5$$
$$3x - 5y = 17$$

Show clear algebraic working.

$x =$ .....

$y =$ .....

**(Total for Question 12 is 4 marks)**

DO NOT WRITE IN THIS AREA
DO NOT WRITE IN THIS AREA
DO NOT WRITE IN THIS AREA

**13** The curve **C** has equation $y = 5x^3 - x^2 - 6x + 4$

(a) Find $\frac{dy}{dx}$

$\frac{dy}{dx} =$ .....

**(2)**

There are two points on the curve **C** at which the gradient of the curve is 2

(b) Find the $x$ coordinate of each of these two points.
Show clear algebraic working.

.....

**(4)**

**(Total for Question 13 is 6 marks)**

DO NOT WRITE IN THIS AREA
DO NOT WRITE IN THIS AREA
DO NOT WRITE IN THIS AREA

**14** Expand and simplify $(4x + 1)(x - 3)(5x + 6)$

.....

**(Total for Question 14 is 3 marks)**

DO NOT WRITE IN THIS AREA
DO NOT WRITE IN THIS AREA
DO NOT WRITE IN THIS AREA

**15**

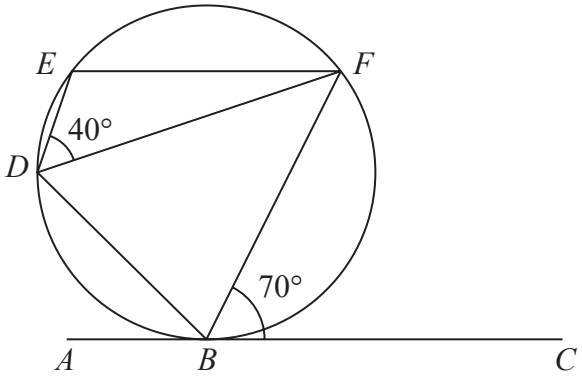


Diagram **NOT** accurately drawn

*B*, *D*, *E* and *F* are points on a circle.
*ABC* is the tangent to the circle at *B*.

Angle *EDF* = 40°
Angle *FBC* = 70°

Prove that the tangent *ABC* is parallel to *EF*.
Give a reason for each stage of your working.

**(Total for Question 15 is 4 marks)**

DO NOT WRITE IN THIS AREA
DO NOT WRITE IN THIS AREA
DO NOT WRITE IN THIS AREA

**16** The functions f and g are defined as

$$f: x \mapsto 5x - 7$$

$$g: x \mapsto \frac{5x}{x + 4}$$

(a) Write down the value of $x$ that must be excluded from any domain of g

.....

**(1)**

(b) Find gf(2.6)

.....

**(2)**

(c) Solve $fg(x) = 2$

$x =$ .....

**(3)**

(d) Express the inverse function $g^{-1}$ in the form $g^{-1}: x \mapsto ...$

$g^{-1}: x \mapsto$ .....

**(3)**

**(Total for Question 16 is 9 marks)**

DO NOT WRITE IN THIS AREA
DO NOT WRITE IN THIS AREA
DO NOT WRITE IN THIS AREA

**17** The diagram shows a prism *ABCDEFGH* with a horizontal base.

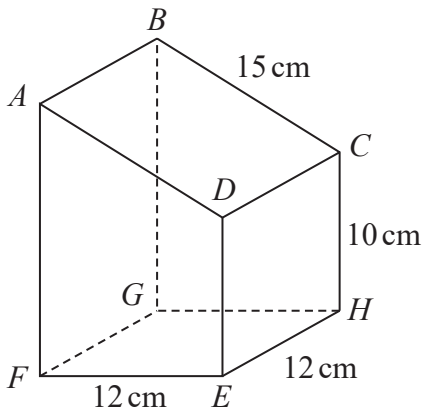


Diagram **NOT** accurately drawn

The base of the prism, *EFGH*, is a square of side 12 cm.
Trapezium *ADEF* is a cross section of the prism where *AF* and *DE* are vertical edges.

*DE* = *CH* = 10 cm
*AD* = *BC* = 15 cm

(a) Work out the size of the angle between *CF* and the base *EFGH*.
Give your answer correct to one decimal place.

..... °

**(3)**

(b) Work out the length of *BE*.
Give your answer correct to one decimal place.

..... cm

**(3)**

**(Total for Question 17 is 6 marks)**

DO NOT WRITE IN THIS AREA
DO NOT WRITE IN THIS AREA
DO NOT WRITE IN THIS AREA

**18** In an arithmetic series, the 6th term is 39
In the same arithmetic series, the 19th term is 7.8

Work out the sum of the first 25 terms of the arithmetic series.

.....

**(Total for Question 18 is 4 marks)**

DO NOT WRITE IN THIS AREA
DO NOT WRITE IN THIS AREA
DO NOT WRITE IN THIS AREA

**19** The diagram shows rectangle *ABCD* with rectangle *EFGH* cut out to form the shaded region.

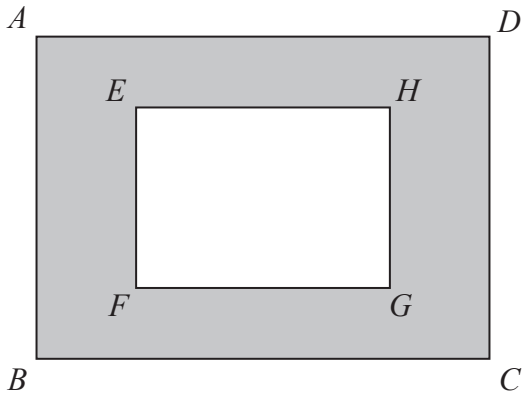


Diagram **NOT** accurately drawn

*AD* = 8.3 cm correct to one decimal place
*DC* = 7.2 cm correct to one decimal place
*EH* = 6.2 cm correct to one decimal place
*HG* = 5.3 cm correct to one decimal place

Work out the upper bound of the area of the shaded region.
Show your working clearly.

..... $cm^2$

**(Total for Question 19 is 3 marks)**

DO NOT WRITE IN THIS AREA
DO NOT WRITE IN THIS AREA
DO NOT WRITE IN THIS AREA

**20** A curve has equation $y = f(x)$
There is only one maximum point on the curve.
The coordinates of this maximum point are $(-3, 4)$

Write down the coordinates of the maximum point on the curve with equation

(i) $y = f(x) - 6$

(.....  , .....)

(ii) $y = f(2x)$

(.....  , .....)

**(Total for Question 20 is 2 marks)**

DO NOT WRITE IN THIS AREA

DO NOT WRITE IN THIS AREA

DO NOT WRITE IN THIS AREA

**21** Given that $M = \dfrac{18^{4n} \times 2^{3(n^2-6n)} \times 3^{2(1-4n)}}{12^2}$

find the values of $n$ for which $M = 2$

.....

**(Total for Question 21 is 5 marks)**

DO NOT WRITE IN THIS AREA
DO NOT WRITE IN THIS AREA
DO NOT WRITE IN THIS AREA

**22** The diagram shows a regular octagon *ABCDEFGH*.

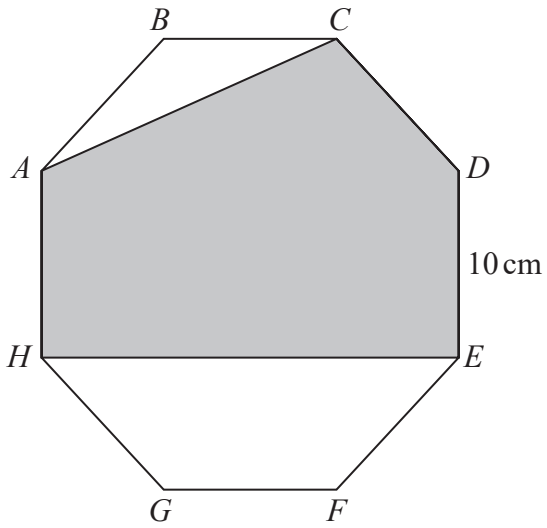


Diagram **NOT** accurately drawn

Each side of the octagon has length 10 cm.

Find the area of the shaded region *ACDEH*.
Give your answer correct to the nearest $cm^2$

DO NOT WRITE IN THIS AREA
DO NOT WRITE IN THIS AREA
DO NOT WRITE IN THIS AREA

DO NOT WRITE IN THIS AREA
DO NOT WRITE IN THIS AREA
DO NOT WRITE IN THIS AREA

..... $cm^2$

**(Total for Question 22 is 6 marks)**

**Turn over for Question 23**

**23** In a bag, there are only

3 blue beads
4 white beads
and $x$ orange beads.

Jean is going to take at random two beads from the bag.

The probability that Jean will take two beads of the same colour is $\frac{3}{8}$

Find the total number of beads in the bag.
Show clear algebraic working.

.....

**(Total for Question 23 is 4 marks)**

**TOTAL FOR PAPER IS 100 MARKS**

DO NOT WRITE IN THIS AREA
DO NOT WRITE IN THIS AREA
DO NOT WRITE IN THIS AREA