www.dynamicpapers.com

Please check the examination details below before entering your candidate information

Candidate surname	Other names

Pearson Edexcel

International GCSE (9–1)

Centre Number | | | | | |

Candidate Number | | | | |

Tuesday 14 May 2019

Afternoon (Time: 2 hours)

Paper Reference **4BI1/1B 4SD0/1B**

Biology

Unit: 4BI1
Science (Double Award) 4SD0
Paper: 1B

You must have:
Calculator, ruler

Total Marks

Instructions

- Use **black** ink or ball-point pen.
- **Fill in the boxes** at the top of this page with your name, centre number and candidate number.
- Answer **all** questions.
- Answer the questions in the spaces provided
  – *there may be more space than you need.*
- Show all the steps in any calculations and state the units.
- Some questions must be answered with a cross in a box ☒. If you change your mind about an answer, put a line through the box ☒ and then mark your new answer with a cross ☒.

Information

- The total mark for this paper is 110.
- The marks for **each** question are shown in brackets
  – *use this as a guide as to how much time to spend on each question.*

Advice

- Read each question carefully before you start to answer it.
- Write your answers neatly and in good English.
- Try to answer every question.
- Check your answers if you have time at the end.

Turn over ▶

P58564RA

©2019 Pearson Education Ltd.

1/1/1/1/1/

P 5 8 5 6 4 R A 0 1 3 2

Pearson

www.dynamicpapers.com

Answer ALL questions.

1 This is a three-dimensional diagram of a plant cell.

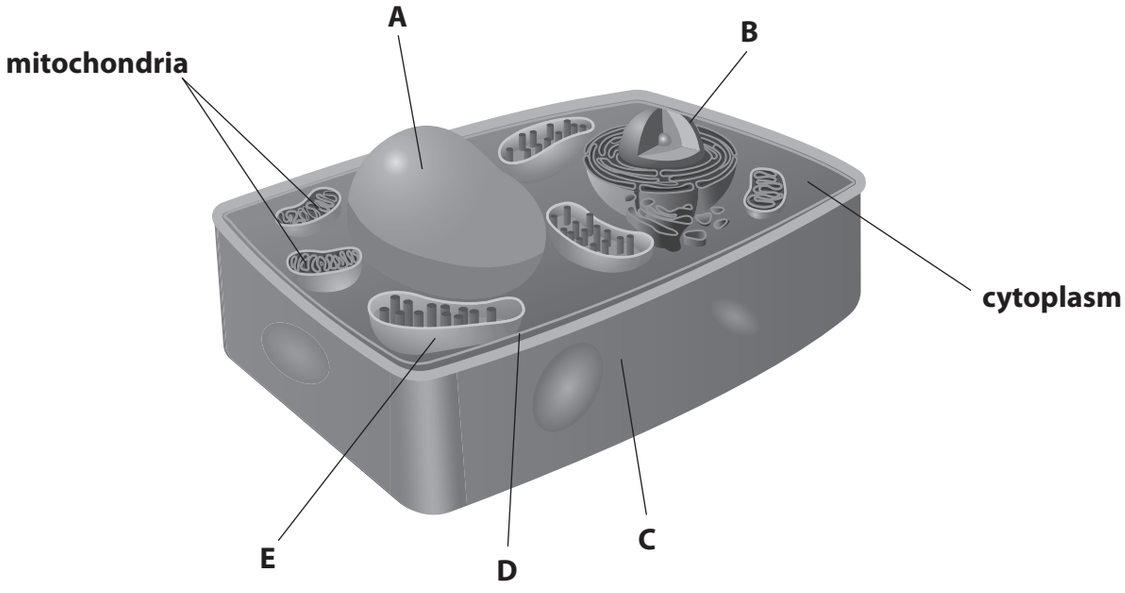

(a) Name the structures labelled A, B, C, and D.

(4)

A .....

B .....

C .....

D .....

(b) Structure E is a chloroplast.

Chloroplasts are not found in animal cells.

(i) Give the letter of another structure shown in the diagram but not found in animal cells.

(1)

.....

DO NOT WRITE IN THIS AREA
DO NOT WRITE IN THIS AREA
DO NOT WRITE IN THIS AREA
DO NOT WRITE IN THIS AREA
DO NOT WRITE IN THIS AREA
DO NOT WRITE IN THIS AREA

www.dynamicpapers.com

DO NOT WRITE IN THIS AREA
DO NOT WRITE IN THIS AREA
DO NOT WRITE IN THIS AREA
DO NOT WRITE IN THIS AREA
DO NOT WRITE IN THIS AREA
DO NOT WRITE IN THIS AREA

(ii) Explain why some plant cells contain many chloroplasts, some plant cells contain few chloroplasts and some plant cells contain no chloroplasts.

(3)

(c) Ribosomes are found in plant cells and in animal cells.

Name the process that occurs at the ribosomes.

(1)

(Total for Question 1 = 9 marks)

www.dynamicpapers.com

BLANK PAGE

DO NOT WRITE IN THIS AREA
DO NOT WRITE IN THIS AREA
DO NOT WRITE IN THIS AREA
DO NOT WRITE IN THIS AREA
DO NOT WRITE IN THIS AREA
DO NOT WRITE IN THIS AREA

www.dynamicpapers.com

DO NOT WRITE IN THIS AREA
DO NOT WRITE IN THIS AREA
DO NOT WRITE IN THIS AREA
DO NOT WRITE IN THIS AREA
DO NOT WRITE IN THIS AREA
DO NOT WRITE IN THIS AREA

2 The photograph shows a type of fish called a salmon.



(Source: © Alexander Raths/Shutterstock)

Some humans eat salmon as a source of protein.

Protein is a component of a balanced diet.

(a) Which statement describes what happens to salmon protein in the human stomach?

(1)

☒ **A** it is digested into amino acids

☒ **B** its surface area is increased by bile

☒ **C** its pH is raised by hydrochloric acid

☒ **D** it is absorbed by villi

(b) The table lists other components of a balanced diet and their functions.

Complete the table by giving a function of each component.

The first one has been done for you.

(3)

Component	Function
lipid	store of energy
vitamin D	
iron	
fibre	

www.dynamicpapers.com

(c) A student investigates the effect of genetic modification on the growth of salmon.

The student measures the mass and length of one normal salmon and one genetically modified salmon when both salmon are 18 months old.

The table shows the student's results.

Type of salmon	Mass in g	Length in cm
normal	1250	33
genetically modified	3000	61

(i) It is recommended that a 15-year-old person needs 50 g of protein per day for a balanced diet.

A normal salmon contains 20% protein.

Calculate how many 15-year-olds can have their recommended daily allowance of protein supplied by the 18-month-old normal salmon.

(2)

number = ...

DO NOT WRITE IN THIS AREA
DO NOT WRITE IN THIS AREA
DO NOT WRITE IN THIS AREA
DO NOT WRITE IN THIS AREA
DO NOT WRITE IN THIS AREA
DO NOT WRITE IN THIS AREA

www.dynamicpapers.com

DO NOT WRITE IN THIS AREA
DO NOT WRITE IN THIS AREA
DO NOT WRITE IN THIS AREA
DO NOT WRITE IN THIS AREA
DO NOT WRITE IN THIS AREA
DO NOT WRITE IN THIS AREA

(ii) The student concludes that his results show that genetically modified (GM) salmon are useful in providing a balanced diet.

Discuss the student's conclusion.

(6)

(d) The passage describes the role of enzymes involved in the genetic modification of salmon.

Complete the passage by writing a suitable word in each space.

(3)

All salmon contain a length of DNA called a ..... , which controls the production of growth hormone. Another length of DNA, from a different species of fish, is cut out using a ..... enzyme. This DNA is then joined to the salmon DNA using an enzyme called ..... .

This causes the salmon to produce growth hormone at all times.

(Total for Question 2 = 15 marks)

www.dynamicpapers.com

3 The diagram shows a food web.

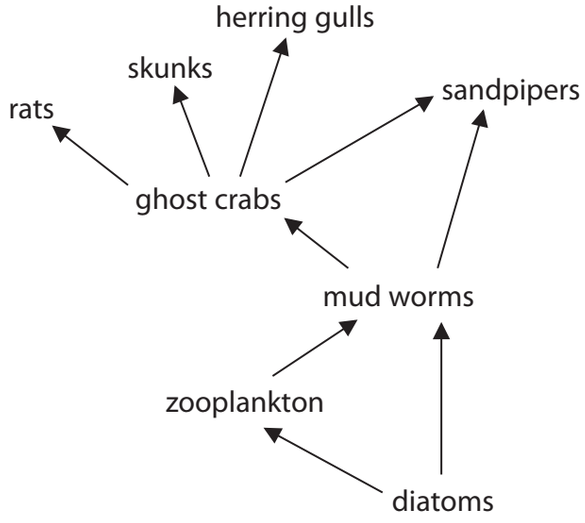

(a) Use information from the food web to complete the table.

The first one has been done for you.

(3)

number of organisms	8
number of producers	
number of primary consumers	
number of food chains	

(b) Explain why the energy in the mud worms is not all transferred to the organisms that eat them.

(4)

DO NOT WRITE IN THIS AREA
DO NOT WRITE IN THIS AREA
DO NOT WRITE IN THIS AREA
DO NOT WRITE IN THIS AREA
DO NOT WRITE IN THIS AREA
DO NOT WRITE IN THIS AREA

www.dynamicpapers.com

DO NOT WRITE IN THIS AREA
DO NOT WRITE IN THIS AREA
DO NOT WRITE IN THIS AREA
DO NOT WRITE IN THIS AREA
DO NOT WRITE IN THIS AREA
DO NOT WRITE IN THIS AREA

(c) The diagram shows sandpipers feeding.

Sandpipers have long beaks so that they can dig for worms in the mud.

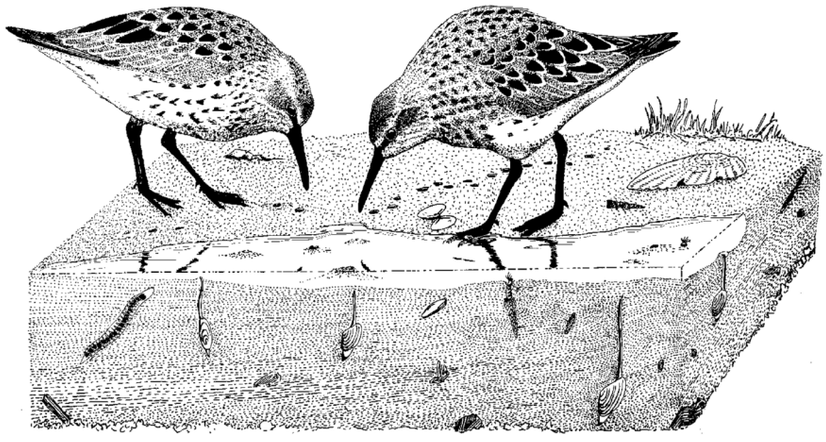

(Source: © Birchside www.fotosearch.com)

Explain how sandpipers evolved to have long beaks.

(4)

(Total for Question 3 = 11 marks)

www.dynamicpapers.com

4 This apparatus can be used to show osmosis.

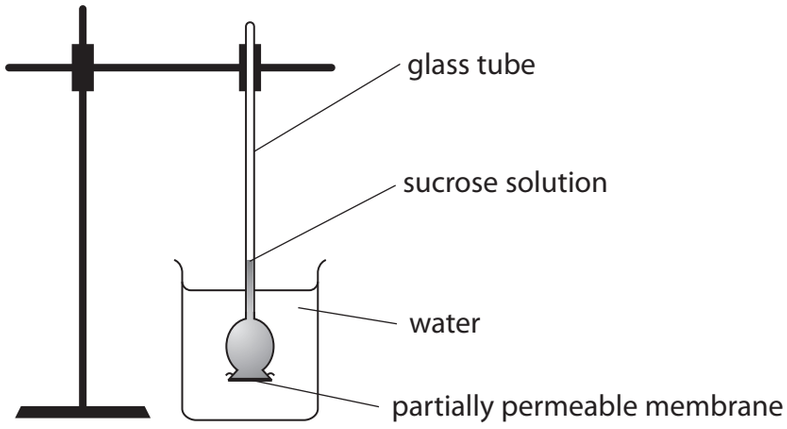

(a) Explain what happens to the level of the sucrose solution in the glass tube.

(3)

(b) Describe how this apparatus could be modified to measure the rate of osmosis at different temperatures.

(3)

(Total for Question 4 = 6 marks)

DO NOT WRITE IN THIS AREA
DO NOT WRITE IN THIS AREA
DO NOT WRITE IN THIS AREA
DO NOT WRITE IN THIS AREA
DO NOT WRITE IN THIS AREA
DO NOT WRITE IN THIS AREA

www.dynamicpapers.com

DO NOT WRITE IN THIS AREA
DO NOT WRITE IN THIS AREA
DO NOT WRITE IN THIS AREA
DO NOT WRITE IN THIS AREA
DO NOT WRITE IN THIS AREA
DO NOT WRITE IN THIS AREA

BLANK PAGE

www.dynamicpapers.com

5 Wheat seeds contain stores of a large insoluble molecule.

This molecule is digested by amylase as the seeds germinate.

(a) What is the name of this large insoluble molecule?

(1)

- ☒ **A** glucose
- ☒ **B** lipid
- ☒ **C** protein
- ☒ **D** starch

(b) A student investigates the oxygen absorbed by germinating seeds at different temperatures.

The diagram shows some of the student's apparatus.

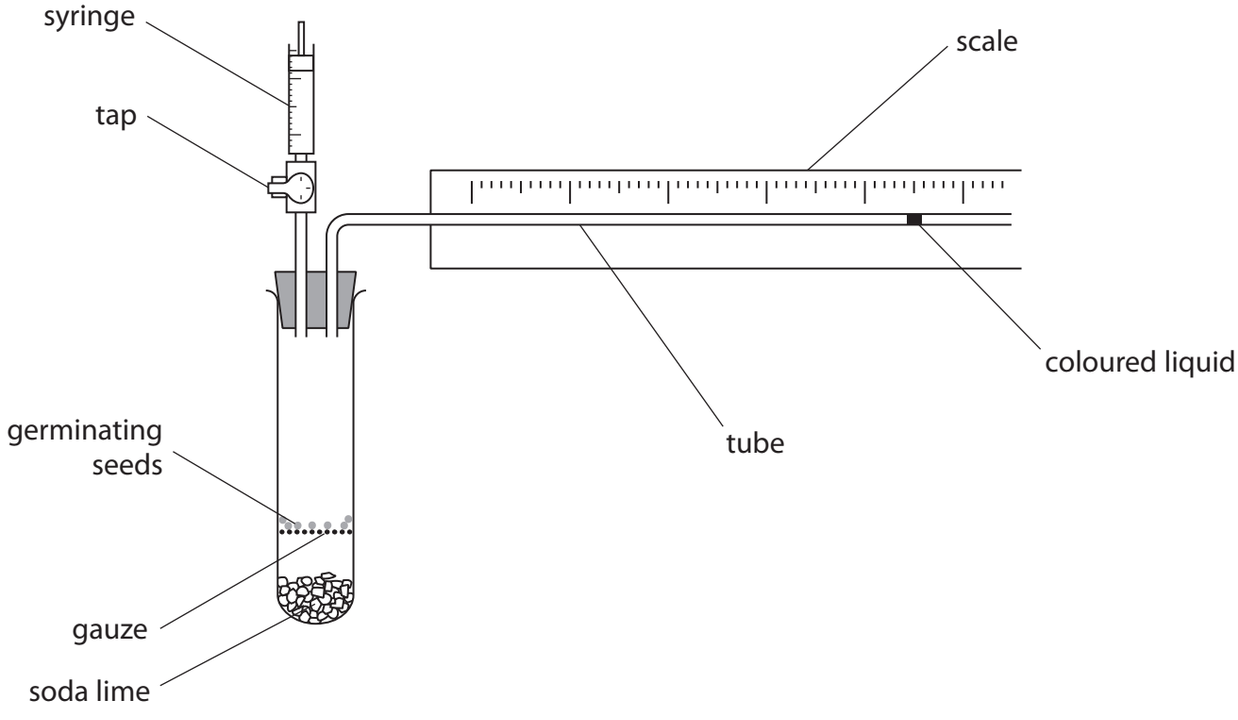

DO NOT WRITE IN THIS AREA
DO NOT WRITE IN THIS AREA
DO NOT WRITE IN THIS AREA
DO NOT WRITE IN THIS AREA
DO NOT WRITE IN THIS AREA
DO NOT WRITE IN THIS AREA

www.dynamicpapers.com

DO NOT WRITE IN THIS AREA
DO NOT WRITE IN THIS AREA
DO NOT WRITE IN THIS AREA
DO NOT WRITE IN THIS AREA
DO NOT WRITE IN THIS AREA
DO NOT WRITE IN THIS AREA

(i) Suggest why the student opens the tap after obtaining one set of results.

(2)

.....

.....

.....

.....

(ii) What is the function of the soda lime?

(1)

☒ **A** it absorbs carbon dioxide

☒ **B** it absorbs oxygen

☒ **C** it releases carbon dioxide

☒ **D** it releases oxygen

(iii) The student measures the distance moved by the coloured liquid and converts this to volume of oxygen absorbed.

The volume of oxygen absorbed can be calculated using the formula

volume = $\pi \times \text{radius}^2 \times \text{distance}$

Calculate the volume of oxygen absorbed when the coloured liquid moves a distance of 6.0 mm.

[diameter of tube = 1.0 mm]

(3)

volume = ... cm^3

www.dynamicpapers.com

(c) The graph shows the results of the student's investigation.

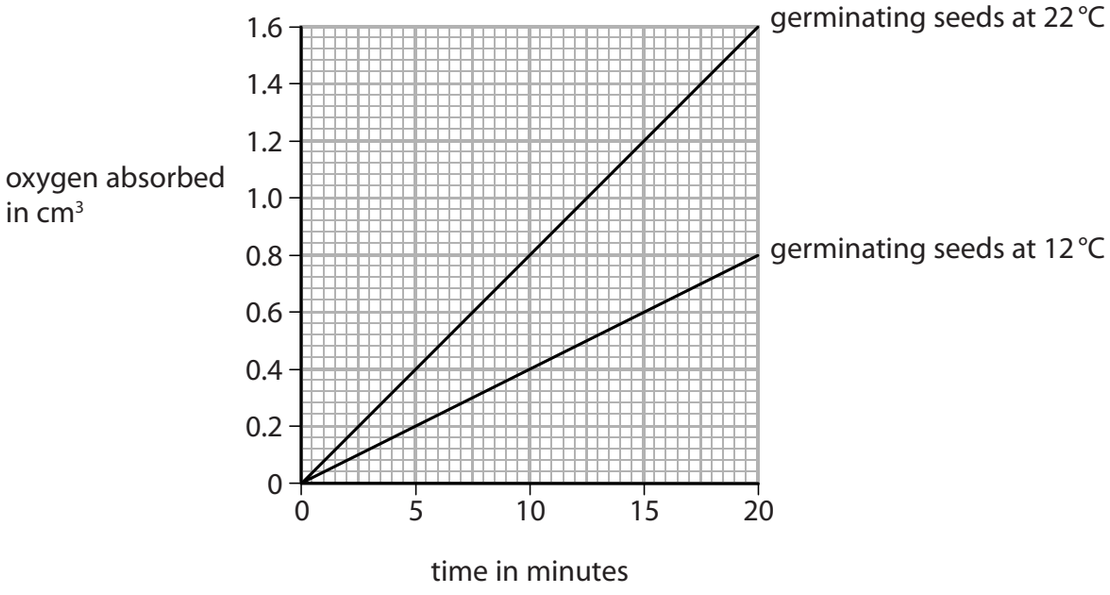

(i) Calculate the percentage increase in the rate of oxygen absorption at 22 °C compared to the rate of oxygen absorption at 12 °C.

(2)

percentage = ...

(ii) Suggest why the rate of oxygen absorption is greater at 22 °C than at 12 °C.

(2)

.....

.....

.....

.....

.....

.....

(Total for Question 5 = 11 marks)

DO NOT WRITE IN THIS AREA
DO NOT WRITE IN THIS AREA
DO NOT WRITE IN THIS AREA
DO NOT WRITE IN THIS AREA
DO NOT WRITE IN THIS AREA
DO NOT WRITE IN THIS AREA

www.dynamicpapers.com

DO NOT WRITE IN THIS AREA
DO NOT WRITE IN THIS AREA
DO NOT WRITE IN THIS AREA
DO NOT WRITE IN THIS AREA
DO NOT WRITE IN THIS AREA
DO NOT WRITE IN THIS AREA

6 The diagram shows a sperm cell from a rat.

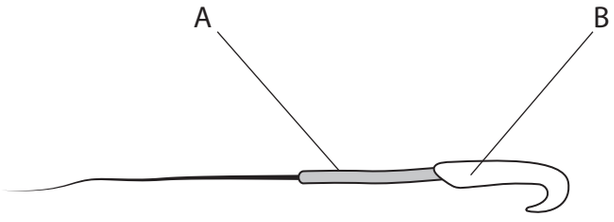

(a) (i) Describe the role of a sperm cell.

(1)

.....

.....

(ii) Describe the structures found in part B.

(2)

.....

.....

.....

.....

(iii) Explain why part A contains many mitochondria.

(2)

.....

.....

.....

.....

www.dynamicpapers.com

(b) Nicotine is a chemical found in cigarettes.

A scientist investigates how nicotine affects sperm cells.

The scientist gives male rats different concentrations of nicotine.

He then calculates the percentage of damaged sperm cells in the semen produced by each rat.

The table shows his results.

Concentration of nicotine in mg per kg of rat	Percentage of damaged sperm cells (%)
0.0	6.4
0.5	16.8
1.0	24.8

(i) The sample of semen from a rat given a nicotine concentration of 1.0 mg per kg contains 5.8×10^7 sperm cells.

Calculate the number of damaged sperm cells in this sample.

(2)

number = ...

DO NOT WRITE IN THIS AREA DO NOT WRITE IN THIS AREA DO NOT WRITE IN THIS AREA DO NOT WRITE IN THIS AREA DO NOT WRITE IN THIS AREA DO NOT WRITE IN THIS AREA

www.dynamicpapers.com

(ii) The scientist concludes that cigarette smoking could make male humans infertile.

Discuss this conclusion.

(5)

(Total for Question 6 = 12 marks)

DO NOT WRITE IN THIS AREA
DO NOT WRITE IN THIS AREA
DO NOT WRITE IN THIS AREA
DO NOT WRITE IN THIS AREA
DO NOT WRITE IN THIS AREA
DO NOT WRITE IN THIS AREA

www.dynamicpapers.com

7 (a) A student investigates the sugar content of four different fruit juices.

This is the student's method.

- add 5 cm^3 of fruit juice to a boiling tube
- add 5 cm^3 of Benedict's solution to the boiling tube
- place the boiling tube in a water bath at 70 °C for three minutes
- remove the boiling tube and record the colour of the solution

The student uses this method for each of the four fruit juices.

The table shows the student's results.

Fruit juice	Colour of solution after heating for three minutes
A	blue
B	brick red
C	yellow
D	green

(i) Give two variables that the student controls in his investigation.

(2)

1 .....

2 .....

(ii) Give the juices A, B, C and D in order of sugar content, from highest to lowest.

(2)

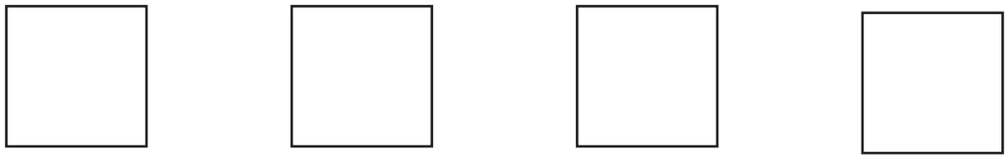

highest lowest

DO NOT WRITE IN THIS AREA DO NOT WRITE IN THIS AREA DO NOT WRITE IN THIS AREA DO NOT WRITE IN THIS AREA DO NOT WRITE IN THIS AREA DO NOT WRITE IN THIS AREA

www.dynamicpapers.com

(iii) The student is now given sugar solutions with concentrations of 1%, 5%, 10% and 20%.

Explain how the student could use these solutions to estimate the concentration of sugar in the four fruit juices.

(3)

DO NOT WRITE IN THIS AREA
DO NOT WRITE IN THIS AREA
DO NOT WRITE IN THIS AREA
DO NOT WRITE IN THIS AREA
DO NOT WRITE IN THIS AREA
DO NOT WRITE IN THIS AREA

www.dynamicpapers.com

(b) Some fruit juices contain high concentrations of sugar.

These fruit juices increase the number of bacteria in the mouth.

This may lead to an increase in tooth decay.

(i) Suggest why high concentrations of sugar may increase tooth decay.

(2)

(ii) Explain another health risk to children who drink fruit juices with high concentrations of sugars.

(2)

(Total for Question 7 = 11 marks)

DO NOT WRITE IN THIS AREA
DO NOT WRITE IN THIS AREA
DO NOT WRITE IN THIS AREA
DO NOT WRITE IN THIS AREA
DO NOT WRITE IN THIS AREA
DO NOT WRITE IN THIS AREA

www.dynamicpapers.com

DO NOT WRITE IN THIS AREA
DO NOT WRITE IN THIS AREA
DO NOT WRITE IN THIS AREA
DO NOT WRITE IN THIS AREA
DO NOT WRITE IN THIS AREA
DO NOT WRITE IN THIS AREA

BLANK PAGE

www.dynamicpapers.com

8 A scientist investigates the effect of exercise on breathing rate.

She measures the breathing rate in breaths per minute of two people, P and Q, every 5 minutes for 30 minutes.

This is her method.

- measure their breathing rate every 5 minutes while they exercise for 20 minutes
- measure their breathing rate every 5 minutes for a further 10 minutes while they recover from the exercise

The table shows her results.

Time in minutes	Breathing rate in breaths per minute	
	Person P	Person Q
0	12	15
5	20	24
10	22	24
15	25	23
20	24	20
25	16	19
30	12	15

DO NOT WRITE IN THIS AREA
DO NOT WRITE IN THIS AREA
DO NOT WRITE IN THIS AREA
DO NOT WRITE IN THIS AREA
DO NOT WRITE IN THIS AREA
DO NOT WRITE IN THIS AREA

www.dynamicpapers.com

DO NOT WRITE IN THIS AREA
DO NOT WRITE IN THIS AREA
DO NOT WRITE IN THIS AREA
DO NOT WRITE IN THIS AREA
DO NOT WRITE IN THIS AREA
DO NOT WRITE IN THIS AREA

(a) (i) Plot a line graph of the results for person P and person Q.

Use a ruler to join your points with straight lines.

(6)

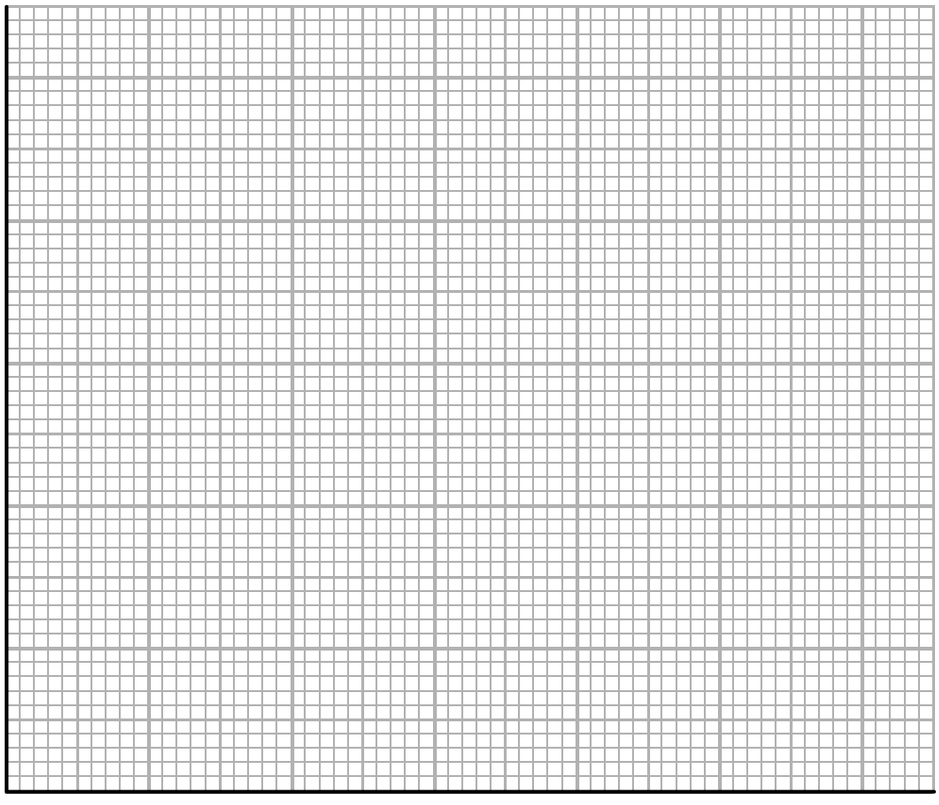

(ii) Explain the change in breathing rate during exercise.

(3)

www.dynamicpapers.com

(iii) Explain why the breathing rates of persons P and Q remain high for five minutes after they have finished exercising.

(2)

(b) The time taken to recover from exercise is often a good measure of fitness.

The scientist concluded that person P is much fitter than person Q.

Comment on the validity of this conclusion.

(4)

(Total for Question 8 = 15 marks)

DO NOT WRITE IN THIS AREA
DO NOT WRITE IN THIS AREA
DO NOT WRITE IN THIS AREA
DO NOT WRITE IN THIS AREA
DO NOT WRITE IN THIS AREA
DO NOT WRITE IN THIS AREA

www.dynamicpapers.com

DO NOT WRITE IN THIS AREA
DO NOT WRITE IN THIS AREA
DO NOT WRITE IN THIS AREA
DO NOT WRITE IN THIS AREA
DO NOT WRITE IN THIS AREA
DO NOT WRITE IN THIS AREA

BLANK PAGE

www.dynamicpapers.com

9 Pollution can occur in the atmosphere and in rivers.

(a) Carbon monoxide can pollute the atmosphere.

Describe the effects of carbon monoxide pollution on humans.

(3)

DO NOT WRITE IN THIS AREA
DO NOT WRITE IN THIS AREA
DO NOT WRITE IN THIS AREA
DO NOT WRITE IN THIS AREA
DO NOT WRITE IN THIS AREA
DO NOT WRITE IN THIS AREA

www.dynamicpapers.com

(b) Water pollution can occur if sewage enters a river.

Explain the biological consequences of sewage pollution on a river ecosystem.

(6)

(Total for Question 9 = 9 marks)

DO NOT WRITE IN THIS AREA
DO NOT WRITE IN THIS AREA
DO NOT WRITE IN THIS AREA
DO NOT WRITE IN THIS AREA
DO NOT WRITE IN THIS AREA
DO NOT WRITE IN THIS AREA

www.dynamicpapers.com

10 (a) Animals produce hormones to communicate between cells.

(i) Which hormone causes the development of secondary sexual characteristics in girls?

(1)

- ☒ **A** adrenaline
- ☒ **B** oestrogen
- ☒ **C** progesterone
- ☒ **D** testosterone

(ii) Which hormone causes an increased blood flow to the muscles during exercise?

(1)

- ☒ **A** adrenaline
- ☒ **B** insulin
- ☒ **C** progesterone
- ☒ **D** testosterone

(iii) Which of these is a correct statement about hormones?

(1)

- ☒ **A** they always produce short-term changes
- ☒ **B** they are carried by neurones
- ☒ **C** they are transported in the plasma
- ☒ **D** they always produce a rapid response

(b) Plants produce plant growth substances such as auxin.

Suggest why some biologists do not consider auxin to be a hormone.

(2)

.....

.....

.....

.....

DO NOT WRITE IN THIS AREA
DO NOT WRITE IN THIS AREA
DO NOT WRITE IN THIS AREA
DO NOT WRITE IN THIS AREA
DO NOT WRITE IN THIS AREA
DO NOT WRITE IN THIS AREA

www.dynamicpapers.com

DO NOT WRITE IN THIS AREA
DO NOT WRITE IN THIS AREA
DO NOT WRITE IN THIS AREA
DO NOT WRITE IN THIS AREA
DO NOT WRITE IN THIS AREA
DO NOT WRITE IN THIS AREA

(c) Plant growth substances stimulate root growth from a cut stem.

Describe an investigation to find the best concentration of plant growth substance to stimulate root growth.

You should include experimental details in your answer and write in full sentences.

(6)

(Total for Question 10 = 11 marks)

TOTAL FOR PAPER = 110 MARKS

www.dynamicpapers.com

BLANK PAGE

DO NOT WRITE IN THIS AREA
DO NOT WRITE IN THIS AREA
DO NOT WRITE IN THIS AREA
DO NOT WRITE IN THIS AREA
DO NOT WRITE IN THIS AREA
DO NOT WRITE IN THIS AREA

www.dynamicpapers.com

DO NOT WRITE IN THIS AREA
DO NOT WRITE IN THIS AREA
DO NOT WRITE IN THIS AREA
DO NOT WRITE IN THIS AREA
DO NOT WRITE IN THIS AREA
DO NOT WRITE IN THIS AREA

BLANK PAGE

www.dynamicpapers.com

BLANK PAGE

DO NOT WRITE IN THIS AREA
DO NOT WRITE IN THIS AREA
DO NOT WRITE IN THIS AREA