www.dynamicpapers.com

Please check the examination details below before entering your candidate information

Candidate surname	Other names

Pearson Edexcel International GCSE (9–1)

Centre Number | Candidate Number

Thursday 16 January 2020

Afternoon (Time: 1 hour 15 minutes) | Paper Reference **4PH1/2P**

Physics
Unit: 4PH1
Paper 2P

You must have:
Calculator, ruler

Total Marks

Instructions

- Use **black** ink or ball-point pen.
- **Fill in the boxes** at the top of this page with your name, centre number and candidate number.
- Answer **all** questions.
- Answer the questions in the spaces provided
  – *there may be more space than you need.*
- Show all the steps in any calculations and state the units.
- Some questions must be answered with a cross in a box ☒. If you change your mind about an answer, put a line through the box ☒ and then mark your new answer with a cross ☒.

Information

- The total mark for this paper is 70.
- The marks for **each** question are shown in brackets
  – *use this as a guide as to how much time to spend on each question.*

Advice

- Read each question carefully before you start to answer it.
- Write your answers neatly and in good English.
- Try to answer every question.
- Check your answers if you have time at the end.

Turn over ▶

P62043A

©2020 Pearson Education Ltd.

1/1/1/1/1/1/

P 6 2 0 4 3 A 0 1 2 0

Pearson

www.dynamicpapers.com

FORMULAE

You may find the following formulae useful.

energy transferred = current × voltage × time $\quad E = I \times V \times t$

$$\text{frequency} = \frac{1}{\text{time period}} \qquad f = \frac{1}{T}$$

$$\text{power} = \frac{\text{work done}}{\text{time taken}} \qquad P = \frac{W}{t}$$

$$\text{power} = \frac{\text{energy transferred}}{\text{time taken}} \qquad P = \frac{W}{t}$$

$$\text{orbital speed} = \frac{2\pi \times \text{orbital radius}}{\text{time period}} \qquad v = \frac{2 \times \pi \times r}{T}$$

(final speed)^2 = (initial speed)^2 + (2 × acceleration × distance moved)

$$v^2 = u^2 + (2 \times a \times s)$$

pressure × volume = constant $\quad p_1 \times V_1 = p_2 \times V_2$

$$\frac{\text{pressure}}{\text{temperature}} = \text{constant} \qquad \frac{p_1}{T_1} = \frac{p_2}{T_2}$$

$$\text{force} = \frac{\text{change in momentum}}{\text{time taken}} \qquad F = \frac{(mv - mu)}{t}$$

$$\frac{\text{change of wavelength}}{\text{wavelength}} = \frac{\text{velocity of a galaxy}}{\text{speed of light}} \qquad \frac{\lambda - \lambda_0}{\lambda_0} = \frac{\Delta\lambda}{\lambda_0} = \frac{v}{c}$$

change in thermal energy = mass × specific heat capacity × change in temperature

$$\Delta Q = m \times c \times \Delta T$$

Where necessary, assume the acceleration of free fall, $g = 10\ \text{m/s}^2$.

DO NOT WRITE IN THIS AREA
DO NOT WRITE IN THIS AREA
DO NOT WRITE IN THIS AREA

www.dynamicpapers.com

DO NOT WRITE IN THIS AREA
DO NOT WRITE IN THIS AREA
DO NOT WRITE IN THIS AREA

Answer ALL questions.

1 This question is about energy resources.

(a) The table lists some methods of generating electricity using energy resources.

Place ticks (✓) in the table to show if each method uses a renewable energy resource. One has been done for you.

(3)

Method of generating electricity	Uses a renewable energy resource
coal power station	
diesel generator	
geothermal power station	
hydroelectric power station	
natural gas turbine	
nuclear power station	
solar cell	✓
wind turbine	

(b) Solar cells can be used to generate electricity.

(i) How is energy transferred from the Sun to a solar cell?

(1)

☒ **A** by heating

☒ **B** by radiation

☒ **C** electrically

☒ **D** mechanically

(ii) State one disadvantage of using solar cells to generate electricity.

(1)

.....

.....

.....

.....

(Total for Question 1 = 5 marks)

www.dynamicpapers.com

2 The photograph shows a brass mass.



© Dudaeva/Shutterstock

(a) State the formula linking density, mass and volume.

(1)

(b) The brass mass has a mass of 454 g.

The density of brass is 8.46 g/cm^3.

Calculate the volume of the brass mass.

Give the unit.

(3)

volume = ... unit .....

(Total for Question 2 = 4 marks)

DO NOT WRITE IN THIS AREA
DO NOT WRITE IN THIS AREA
DO NOT WRITE IN THIS AREA

www.dynamicpapers.com

DO NOT WRITE IN THIS AREA
DO NOT WRITE IN THIS AREA
DO NOT WRITE IN THIS AREA

BLANK PAGE

www.dynamicpapers.com

3 Curling is a sport played on ice.

A player slides stone A across the ice towards a scoring zone.

The ice reduces friction so that there is negligible friction when the stone is sliding.



© Corepics VOF/Shutterstock

(a) Stone A leaves the player's hand with a velocity of 2.90 m/s.

The mass of stone A is 17 kg.

(i) State the formula linking momentum, mass and velocity.

(1)

(ii) Show that the momentum of stone A is approximately 50 kg m/s.

(2)

DO NOT WRITE IN THIS AREA
DO NOT WRITE IN THIS AREA
DO NOT WRITE IN THIS AREA

www.dynamicpapers.com

DO NOT WRITE IN THIS AREA
DO NOT WRITE IN THIS AREA
DO NOT WRITE IN THIS AREA

(b) Stone A slides towards the scoring zone.

In the scoring zone, stone A collides with a stationary stone, B.



© Michael715/Shutterstock

(i) After the collision, both stones move in the same direction as the initial direction of stone A.

The velocity of stone A after the collision is 0.40 m/s.

Calculate the velocity of stone B after the collision.

[mass of stone B = 19 kg]

(4)

velocity of stone B = ... m/s

(ii) When the stones collided, they were in contact for a time of 25 ms.

Calculate the magnitude of the force stone A exerted on stone B in this collision.

(3)

force = ... N

(Total for Question 3 = 10 marks)

www.dynamicpapers.com

4 A student uses this apparatus to demonstrate the effect of electric charge.

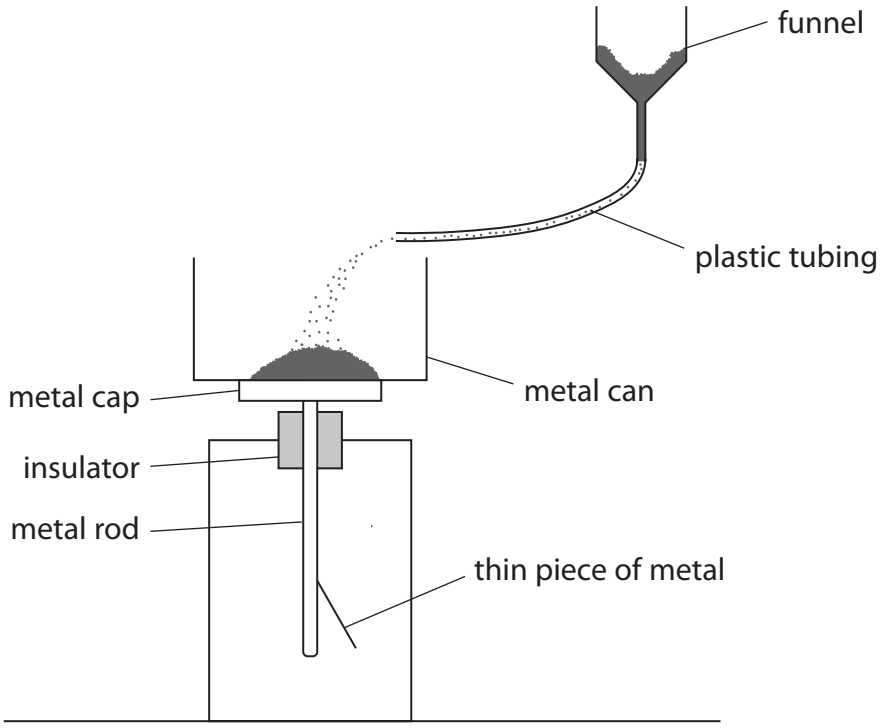

He pours some fine powder into a funnel.

The fine powder moves through a length of plastic tubing and falls into a metal can.

The metal can rests on a metal cap.

The metal cap is connected to a thin piece of metal via a metal rod.

When the powder lands in the can, the thin piece of metal moves away from the metal rod.

(a) Explain why the thin piece of metal moves away from the metal rod.

(4)

DO NOT WRITE IN THIS AREA
DO NOT WRITE IN THIS AREA
DO NOT WRITE IN THIS AREA

www.dynamicpapers.com

DO NOT WRITE IN THIS AREA
DO NOT WRITE IN THIS AREA
DO NOT WRITE IN THIS AREA

(b) A coulombmeter measures electric charge.

The student connects a coulombmeter to the metal can.

When all the powder has landed in the can, the coulombmeter shows a reading of -9.4×10^{-9} C.

(i) Which statement is true for the metal can?

(1)

☒ **A** it gains negatively charged electrons

☒ **B** it loses negatively charged electrons

☒ **C** it gains positively charged electrons

☒ **D** it loses positively charged electrons

(ii) State the formula linking charge, current and time.

(1)

(iii) It takes a time of 12 s from when the powder starts landing in the metal can until all the powder has landed in the can.

Calculate the mean charging current.

(3)

current = ... A

www.dynamicpapers.com

(c) The student suggests that this demonstration is similar to refuelling an aircraft.

The powder represents the fuel and the metal can represents the fuel tank in the aircraft.

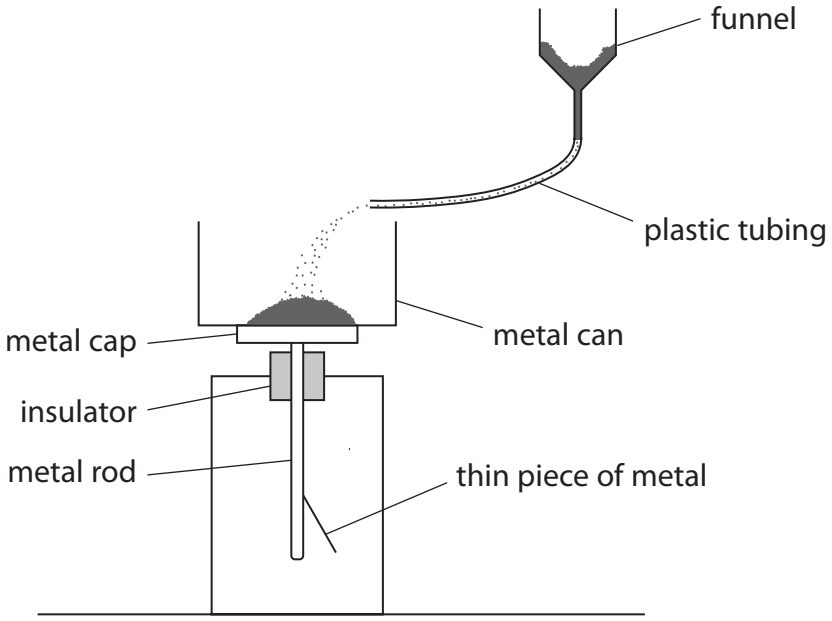

Explain how the student should modify this apparatus to demonstrate how to minimise the dangers when refuelling an aircraft.

You may add to the diagram to help your answer.

(3)

(Total for Question 4 = 12 marks)

DO NOT WRITE IN THIS AREA
DO NOT WRITE IN THIS AREA
DO NOT WRITE IN THIS AREA

www.dynamicpapers.com

DO NOT WRITE IN THIS AREA
DO NOT WRITE IN THIS AREA
DO NOT WRITE IN THIS AREA

5 A sonometer is a piece of equipment used to investigate the frequency of waves on a string.

The photograph shows a sonometer.

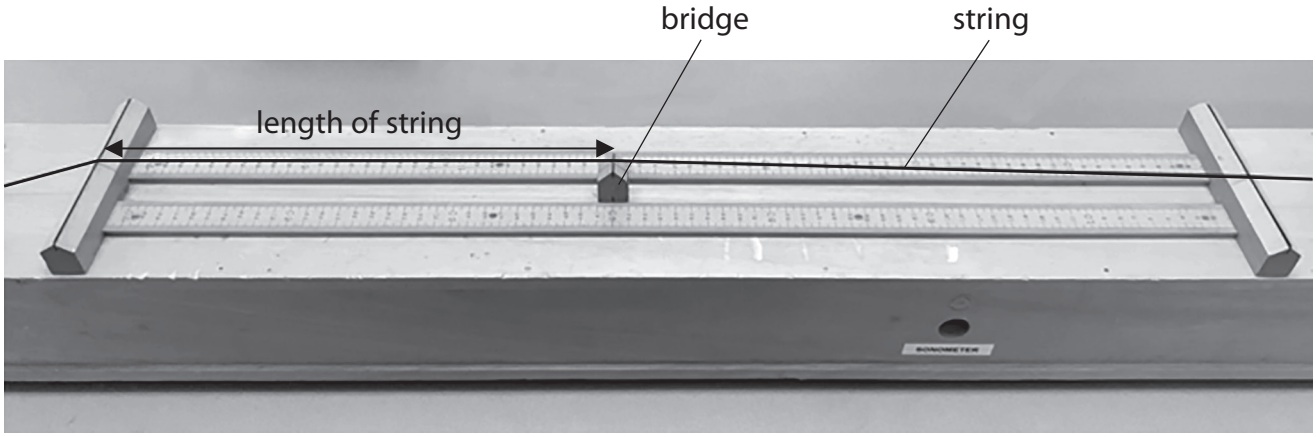

The string is under tension. When the string is plucked it vibrates to produce a sound wave.

(a) Describe how an oscilloscope should be used to measure the frequency of the sound wave from the sonometer.

(4)

www.dynamicpapers.com

(b) A student investigates how the frequency of sound from the sonometer varies with the length of the string.

This is the student's method.

- apply a constant tension force to the string
- pluck the string and measure the frequency of the sound wave produced
- move the bridge to change the length of the string
- pluck the string and measure the new frequency of the sound wave produced

Repeat the method for different lengths of string.

(i) Give a control variable for the student's investigation.

(1)

.....

(ii) The table shows the student's results.

String length in cm	Frequency in Hz			
	Test 1	Test 2	Test 3	Mean
20	105	104	108	106
40	53	54	52	53
60	36	32	35	
80	25	28	26	26
100	22	20	21	21
120	20	17	18	18
140	15	15	14	15

Calculate the mean frequency for a string length of 60 cm.

(2)

mean frequency = ... Hz

(iii) Plot a graph of the mean frequency and string length data on the grid.

(3)

(iv) Draw the curve of best fit.

(1)

DO NOT WRITE IN THIS AREA
DO NOT WRITE IN THIS AREA
DO NOT WRITE IN THIS AREA

www.dynamicpapers.com

DO NOT WRITE IN THIS AREA
DO NOT WRITE IN THIS AREA
DO NOT WRITE IN THIS AREA

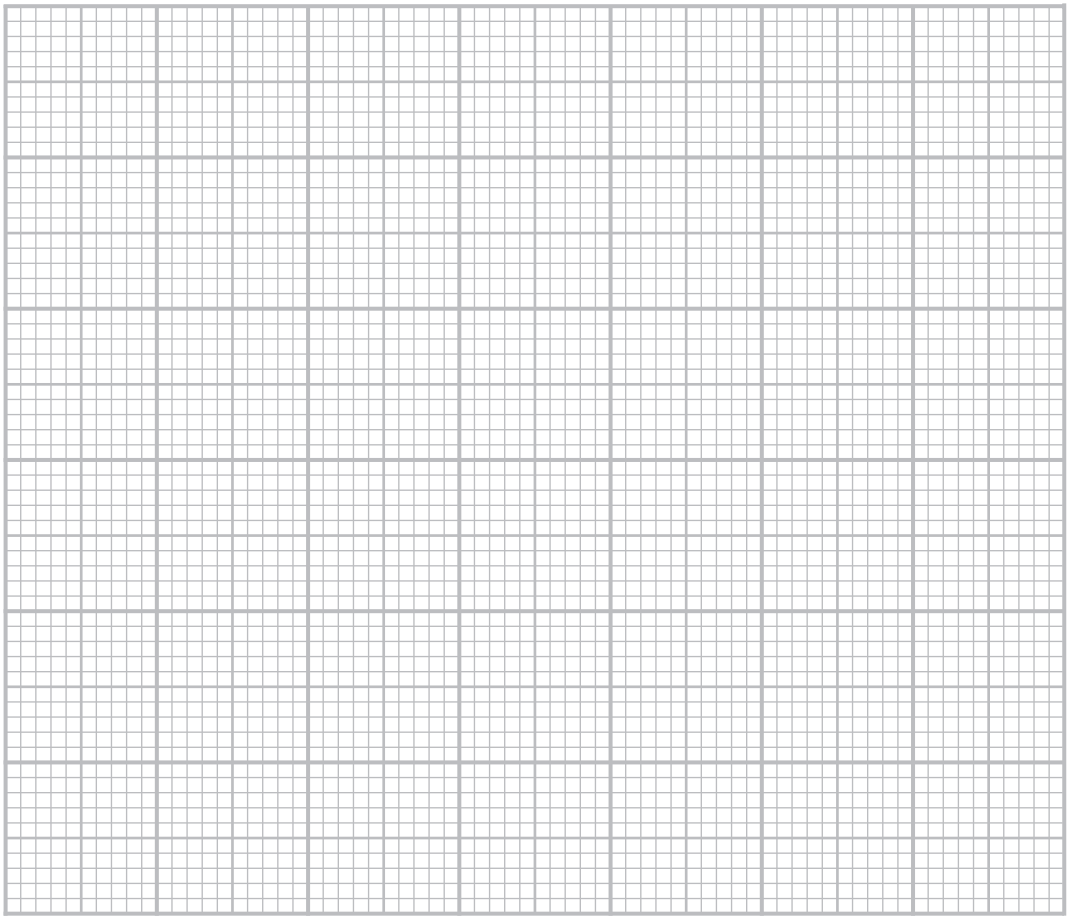

(v) Determine the string length needed to produce a sound wave of frequency 75 Hz.

(1)

string length = ... cm

(vi) The student cannot hear the sound from the sonometer for some of the string lengths tested.

Explain which of the string lengths produce sounds that humans cannot hear.

(2)

.....

.....

.....

.....

(Total for Question 5 = 14 marks)

www.dynamicpapers.com

6 This question is about stars.

(a) Astronomers measure the absolute magnitude of stars.

State what is meant by the term **absolute magnitude**.

(2)

.....

.....

.....

.....

(b) The evolution of stars can be shown on a Hertzsprung-Russell diagram (HR diagram).

Complete the HR diagram by

- labelling the x-axis
- completing the absolute magnitude scale
- drawing the main sequence, red giant and white dwarf regions

(5)

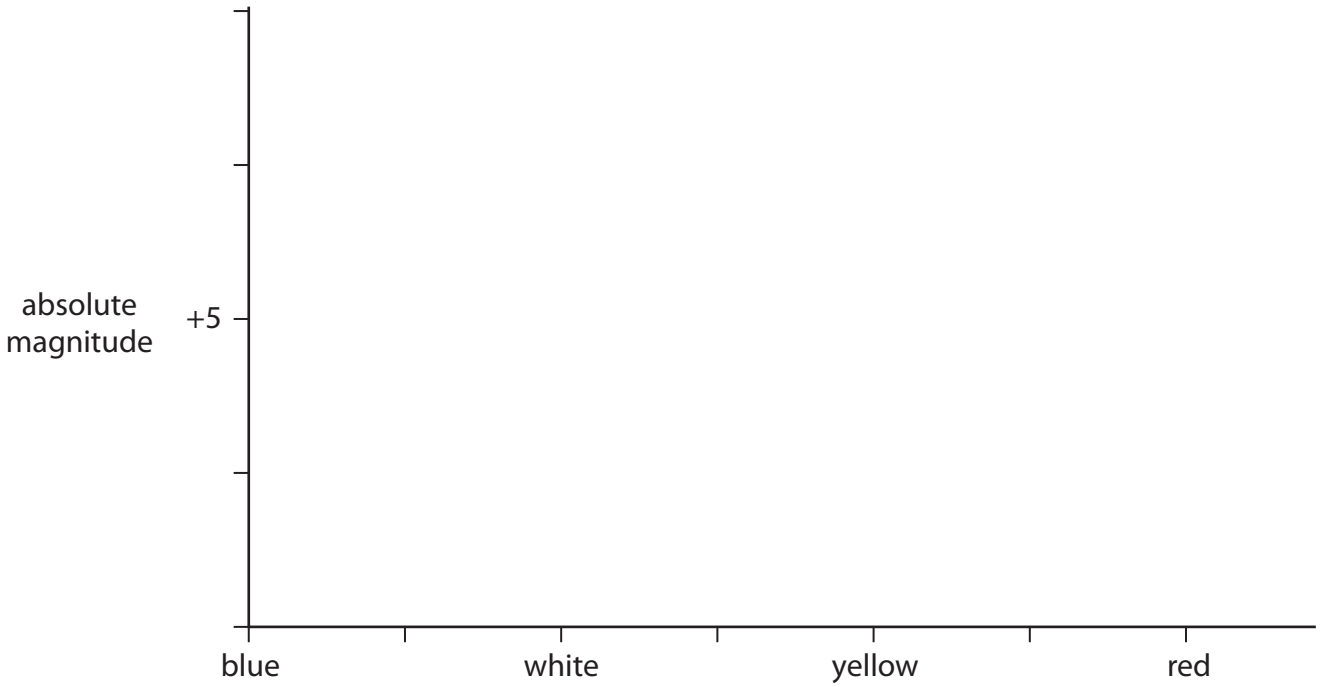

.....

(Total for Question 6 = 7 marks)

DO NOT WRITE IN THIS AREA
DO NOT WRITE IN THIS AREA
DO NOT WRITE IN THIS AREA

www.dynamicpapers.com

DO NOT WRITE IN THIS AREA
DO NOT WRITE IN THIS AREA
DO NOT WRITE IN THIS AREA

BLANK PAGE

www.dynamicpapers.com

7 The photograph shows a glass plate made from uranium glass.



© Laura Healey/Shutterstock

Uranium oxide is used to give the glass a green colour.

(a) Uranium-238 is the most common isotope of uranium and can be represented using this symbol.

$$^{238}_{92}U$$

(i) State what information the numbers 92 and 238 give about the nucleus of this isotope of uranium.

(2)

92 .....

238 .....

(ii) Uranium-238 decays by alpha emission.

Describe how the nucleus of a uranium-238 atom changes as a result of alpha emission.

(2)

.....

.....

.....

.....

DO NOT WRITE IN THIS AREA
DO NOT WRITE IN THIS AREA
DO NOT WRITE IN THIS AREA

www.dynamicpapers.com

DO NOT WRITE IN THIS AREA
DO NOT WRITE IN THIS AREA
DO NOT WRITE IN THIS AREA

(b) The table gives some information about the uranium glass plate.

mass of plate	1.1 kg
percentage (%) of plate made of uranium-238 (by mass)	4.5%
mass of uranium-238 atom	4.0×10^{-27} kg

(i) Calculate the number of uranium-238 atoms in the plate.

(2)

number of atoms = ...

(ii) Uranium-238 is an alpha emitter and has a half-life of 4.5 billion years.

Explain why it is safe to eat food from the uranium glass plate.

(3)

.....

.....

.....

.....

.....

.....

(Total for Question 7 = 9 marks)

www.dynamicpapers.com

8 This question is about magnetic fields.

(a) Diagram 1 shows a positively charged proton moving downwards in a uniform magnetic field.

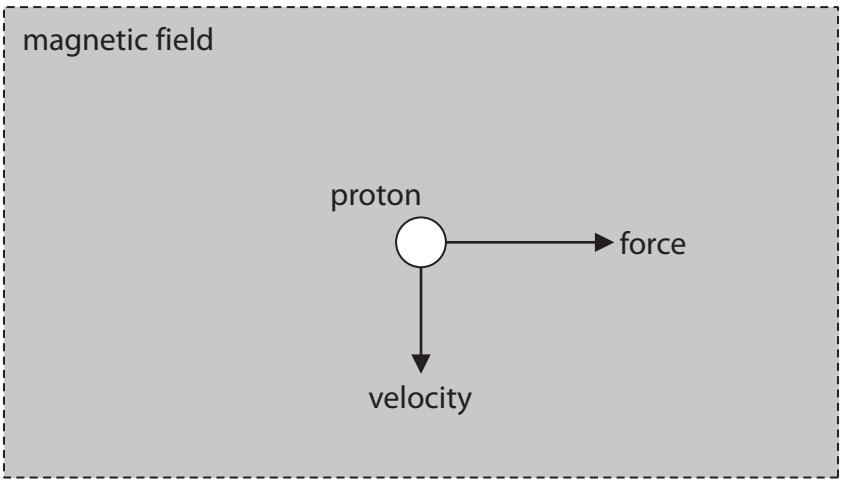

Diagram 1

The proton experiences a force to the right.

What is the direction of the magnetic field?

(1)

☒ **A** into the page

☒ **B** left

☒ **C** out of the page

☒ **D** upward

DO NOT WRITE IN THIS AREA
DO NOT WRITE IN THIS AREA
DO NOT WRITE IN THIS AREA

www.dynamicpapers.com

(b) When a current passes through a flat circular coil, a magnetic field is produced.

Complete diagram 2 by drawing the magnetic field of the flat circular coil.

(3)



Diagram 2

Turn over for the last part of the question

DO NOT WRITE IN THIS AREA
DO NOT WRITE IN THIS AREA
DO NOT WRITE IN THIS AREA

www.dynamicpapers.com

(c) A wireless charging base uses a magnetic field to charge the battery of a mobile phone.



© BeeBright/Shutterstock

There is an alternating current in a coil of wire in the charging base.

There is another coil of wire connected to the battery in the mobile phone.

(i) Explain how the wireless charging base charges the battery of the mobile phone.

(3)

(ii) Discuss the advantages and disadvantages of using a high current in the wireless charging base.

(2)

(Total for Question 8 = 9 marks)

TOTAL FOR PAPER = 70 MARKS

DO NOT WRITE IN THIS AREA
DO NOT WRITE IN THIS AREA
DO NOT WRITE IN THIS AREA