www.dynamicpapers.com

Please check the examination details below before entering your candidate information

| Candidate surname | Other names |
|---|---|
| | |

**Pearson Edexcel International GCSE (9–1)**

Centre Number | Candidate Number

# Wednesday 22 May 2019

Afternoon (Time: 2 hours) | Paper Reference **4PH1/1P 4SD0/1P**

# Physics

**Unit: 4PH1**
**Science (Double Award) 4SD0**
**Paper: 1P**

**You must have:**
Calculator, ruler, protractor

Total Marks

## Instructions

- Use **black** ink or ball-point pen.
- **Fill in the boxes** at the top of this page with your name, centre number and candidate number.
- Answer **all** questions.
- Answer the questions in the spaces provided
  – *there may be more space than you need.*
- Show all the steps in any calculations and state the units.
- Some questions must be answered with a cross in a box ☒. If you change your mind about an answer, put a line through the box ☒ and then mark your new answer with a cross ☒.

## Information

- The total mark for this paper is 110.
- The marks for **each** question are shown in brackets
  – *use this as a guide as to how much time to spend on each question.*

## Advice

- Read each question carefully before you start to answer it.
- Write your answers neatly and in good English.
- Try to answer every question.
- Check your answers if you have time at the end.

*Turn over* ▶

P58372A

©2019 Pearson Education Ltd.

1/1/1/1/1/1/

P 5 8 3 7 2 A 0 1 3 2

Pearson

www.dynamicpapers.com

## FORMULAE

You may find the following formulae useful.

energy transferred = current × voltage × time $\qquad E = I \times V \times t$

$$\text{frequency} = \frac{1}{\text{time period}} \qquad f = \frac{1}{T}$$

$$\text{power} = \frac{\text{work done}}{\text{time taken}} \qquad P = \frac{W}{t}$$

$$\text{power} = \frac{\text{energy transferred}}{\text{time taken}} \qquad P = \frac{W}{t}$$

$$\text{orbital speed} = \frac{2\pi \times \text{orbital radius}}{\text{time period}} \qquad v = \frac{2 \times \pi \times r}{T}$$

$(\text{final speed})^2 = (\text{initial speed})^2 + (2 \times \text{acceleration} \times \text{distance moved})$

$$v^2 = u^2 + (2 \times a \times s)$$

pressure × volume = constant $\qquad p_1 \times V_1 = p_2 \times V_2$

$$\frac{\text{pressure}}{\text{temperature}} = \text{constant} \qquad \frac{p_1}{T_1} = \frac{p_2}{T_2}$$

Where necessary, assume the acceleration of free fall, $g = 10\ \text{m/s}^2$.

DO NOT WRITE IN THIS AREA
DO NOT WRITE IN THIS AREA
DO NOT WRITE IN THIS AREA

www.dynamicpapers.com

DO NOT WRITE IN THIS AREA

DO NOT WRITE IN THIS AREA

DO NOT WRITE IN THIS AREA

**BLANK PAGE**

www.dynamicpapers.com

**Answer ALL questions.**

**1** This question is about waves.

(a) (i) Which of these waves is longitudinal?

**(1)**

- ☒ **A** infrared
- ☒ **B** radio
- ☒ **C** sound
- ☒ **D** ultraviolet

(ii) Draw a straight line linking each electromagnetic wave to its correct hazard.

**(2)**

| Electromagnetic wave | Hazard |
|---|---|
| microwave | skin burns |
| infrared | blindness |
| | internal heating of body tissue |
| | cell mutation |

(b) (i) Which of these is a use for x-rays?

**(1)**

- ☒ **A** checking for broken bones
- ☒ **B** cooking food
- ☒ **C** detecting forged banknotes
- ☒ **D** smoke detectors

DO NOT WRITE IN THIS AREA
DO NOT WRITE IN THIS AREA
DO NOT WRITE IN THIS AREA

www.dynamicpapers.com

(ii) Which of these is a use for infrared waves?

**(1)**

- ☒ **A** checking for broken bones
- ☒ **B** cooking food
- ☒ **C** detecting forged banknotes
- ☒ **D** sterilising medical instruments

**(Total for Question 1 = 5 marks)**

DO NOT WRITE IN THIS AREA
DO NOT WRITE IN THIS AREA
DO NOT WRITE IN THIS AREA

www.dynamicpapers.com

**2** This question is about magnetic fields.

(a) Describe an experiment to investigate the magnetic field pattern around a permanent bar magnet.

You may draw a diagram to help your answer.

**(3)**

DO NOT WRITE IN THIS AREA
DO NOT WRITE IN THIS AREA
DO NOT WRITE IN THIS AREA

www.dynamicpapers.com

(b) The diagram shows two bar magnets.

Complete the diagram to show the magnetic field pattern.

**(3)**




**(Total for Question 2 = 6 marks)**

DO NOT WRITE IN THIS AREA
DO NOT WRITE IN THIS AREA
DO NOT WRITE IN THIS AREA

www.dynamicpapers.com

**3** This question is about food preservation.

(a) The diagram shows how gamma radiation is used to irradiate fruit stored in a wooden box.

The radiation kills bacteria on the fruit.

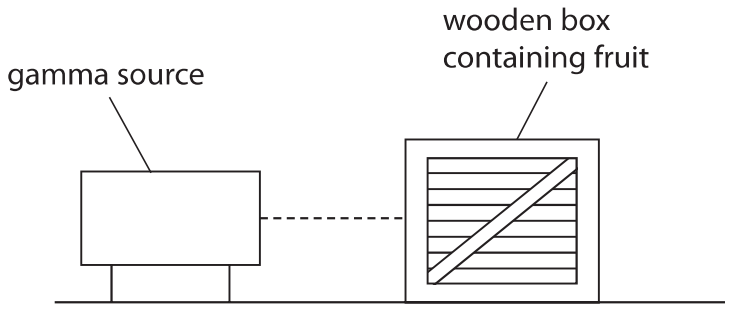


Explain why gamma radiation is used instead of alpha radiation to kill bacteria.

**(2)**

DO NOT WRITE IN THIS AREA
DO NOT WRITE IN THIS AREA
DO NOT WRITE IN THIS AREA

www.dynamicpapers.com

DO NOT WRITE IN THIS AREA

DO NOT WRITE IN THIS AREA

DO NOT WRITE IN THIS AREA

(b) The wooden box has this label.

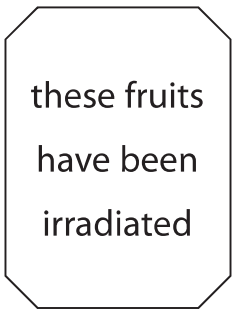


Explain why fruit irradiated with gamma radiation is safe to eat.

**(2)**

.....

.....

.....

.....

.....

**(Total for Question 3 = 4 marks)**

www.dynamicpapers.com

**4** A car driver sees a hazard on the road ahead.

The graph shows the velocity of the car from when the driver sees the hazard.

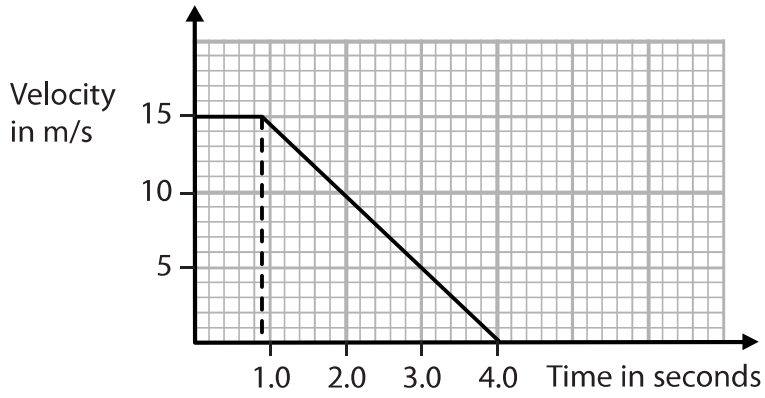


(a) (i) Use the graph to determine the reaction time of the driver.

**(1)**

reaction time = ..... s

(ii) Calculate the stopping distance of the car.

**(4)**

stopping distance = ..... m

(iii) Calculate the acceleration of the car when the car is braking.

**(3)**

acceleration = ..... $m/s^2$

DO NOT WRITE IN THIS AREA
DO NOT WRITE IN THIS AREA
DO NOT WRITE IN THIS AREA

www.dynamicpapers.com

DO NOT WRITE IN THIS AREA

DO NOT WRITE IN THIS AREA

DO NOT WRITE IN THIS AREA

(b) The speed of the car affects the thinking distance and the braking distance.

Discuss other factors that affect the thinking distance and the braking distance of the car.

**(4)**

**(Total for Question 4 = 12 marks)**

www.dynamicpapers.com

**5** This question is about stretching a spring.

(a) The graph shows how the extension of a spring varies when a force is applied to the spring.

The line on the graph shows that the spring has been extended past its elastic limit.

The line has a straight section and a curved section.

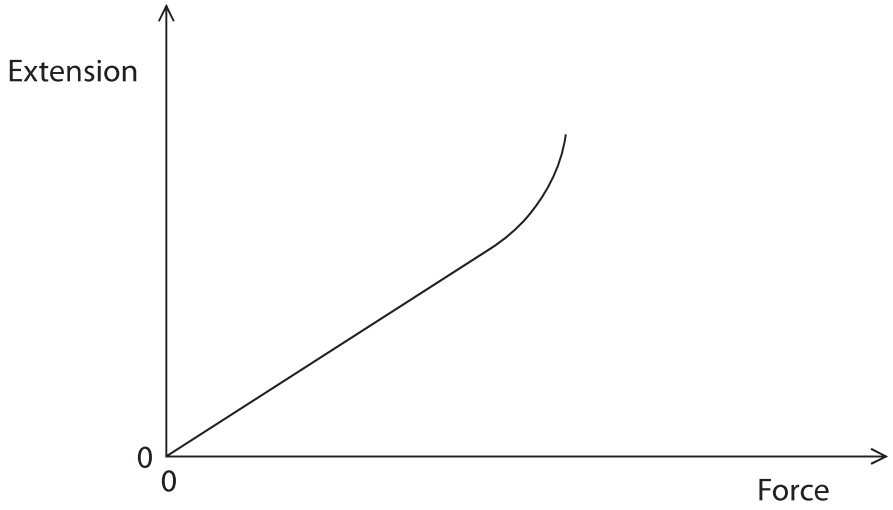


(i) Draw a cross on the line to show the elastic limit of the spring.

**(1)**

(ii) Sketch another line to show how the extension will change when the force is decreased from its maximum value back to 0.

**(2)**

(b) (i) State which energy store of the spring increases when it is stretched.
Assume the spring does not reach its elastic limit.

**(1)**

.....

(ii) How is this energy transferred to the spring?

**(1)**

☒ **A** electrically

☒ **B** by heating

☒ **C** mechanically

☒ **D** by radiation

**(Total for Question 5 = 5 marks)**

DO NOT WRITE IN THIS AREA
DO NOT WRITE IN THIS AREA
DO NOT WRITE IN THIS AREA

www.dynamicpapers.com

DO NOT WRITE IN THIS AREA

DO NOT WRITE IN THIS AREA

DO NOT WRITE IN THIS AREA

**BLANK PAGE**

www.dynamicpapers.com

**6** (a) (i) A student investigates how current varies with voltage for a metal filament lamp.

Draw a diagram of the circuit that a student could use for this investigation.

**(4)**

(ii) Describe a method the student could use for their investigation.

**(4)**

DO NOT WRITE IN THIS AREA
DO NOT WRITE IN THIS AREA
DO NOT WRITE IN THIS AREA

www.dynamicpapers.com

DO NOT WRITE IN THIS AREA
DO NOT WRITE IN THIS AREA
DO NOT WRITE IN THIS AREA

(b) The student extends the investigation by recording additional data for the lamp.

This is her method.

For each voltage

- switch the current on for 45 seconds
- record the current and colour of the lamp
- calculate the power and the energy transferred by the lamp

The table shows the student's results.

| Voltage in V | Current | Power in W | Energy in J | Colour of lamp |
|---|---|---|---|---|
| 0.0 | 0.00 | 0.0 | 0.0 | off |
| 2.0 | 0.40 | 0.8 | 36 | red |
| 4.0 | 0.90 | 3.6 | | orange |
| 6.0 | 1.60 | 9.6 | 430 | yellow |
| 8.0 | 2.80 | 22.4 | 1000 | white |

(i) State the unit for current.

**(1)**

.....

(ii) Calculate the missing value of energy for the voltage of 4.0 V.

Give your answer to 2 significant figures.

**(2)**

energy = ..... J

(iii) The colour of a star is related to its surface temperature.

The Sun is yellow.

Use the student's results to identify a colour for a star that is cooler than the Sun.

**(1)**

.....

**(Total for Question 6 = 12 marks)**

www.dynamicpapers.com

DO NOT WRITE IN THIS AREA

DO NOT WRITE IN THIS AREA

DO NOT WRITE IN THIS AREA

**BLANK PAGE**

www.dynamicpapers.com

DO NOT WRITE IN THIS AREA
DO NOT WRITE IN THIS AREA
DO NOT WRITE IN THIS AREA

**7** This question is about refraction.

(a) State what is meant by the term **refraction**.

**(1)**

.....

.....

(b) The diagram shows a ray of light from a torch incident on the surface of a pool of water.

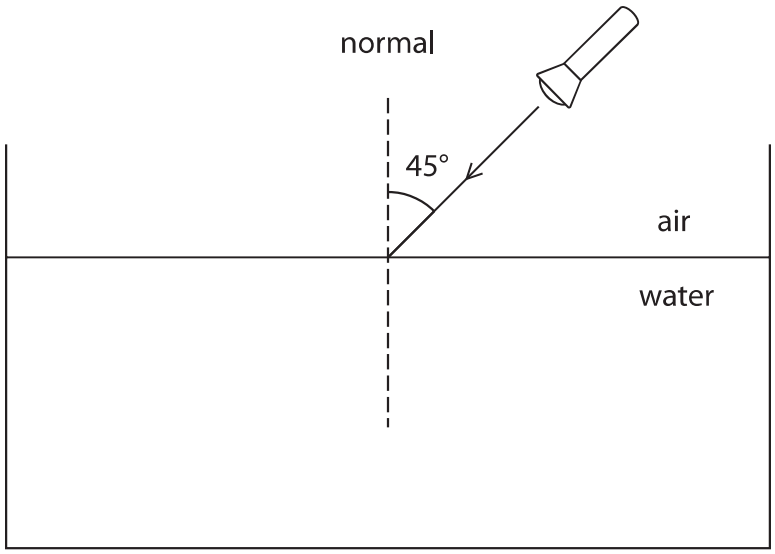


The angle of refraction of the ray of light is 33°

(i) Draw the path of the ray of light in the water.

**(2)**

(ii) State the formula linking refractive index, angle of incidence and angle of refraction.

**(1)**

(iii) Show that the refractive index of water is about 1.3

**(2)**

www.dynamicpapers.com

(c) The torch is moved below the surface of the water. Light from the torch is incident on the water surface at an angle greater than the critical angle.

(i) Explain the meaning of the term **critical angle**.

You may draw a diagram to help your answer.

**(2)**

.....

.....

.....

.....

.....

.....

(ii) State the formula linking critical angle and refractive index.

**(1)**

(iii) Calculate the critical angle of water.

Assume the refractive index of water is 1.3

**(3)**

critical angle = ..... °

DO NOT WRITE IN THIS AREA
DO NOT WRITE IN THIS AREA
DO NOT WRITE IN THIS AREA

www.dynamicpapers.com

DO NOT WRITE IN THIS AREA

DO NOT WRITE IN THIS AREA

DO NOT WRITE IN THIS AREA

(iv) A ray of light leaves the torch as shown in the diagram.

Complete the path of the ray of light.

**(2)**

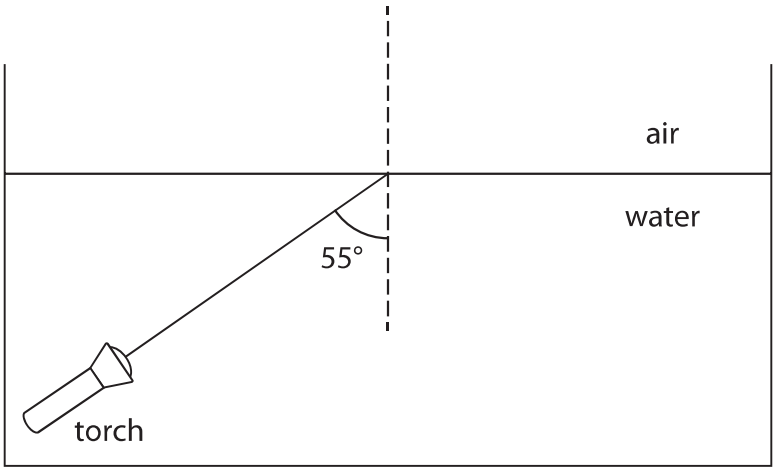


**(Total for Question 7 = 14 marks)**

www.dynamicpapers.com

**8** Schiaparelli is a spacecraft that was sent to Mars in 2016.

(a) Schiaparelli slowed down as it fell vertically through the atmosphere of Mars.

(i) Draw labelled arrows on the diagram to show the forces acting on Schiaparelli as it fell.

**(3)**

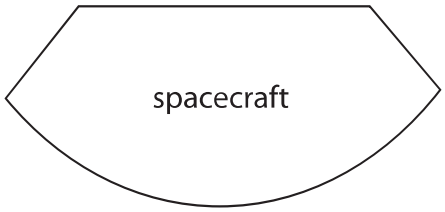


(ii) Schiaparelli then opened a parachute to slow down.

Explain how the spacecraft reached a low terminal velocity after opening its parachute.

Use ideas about forces in your answer.

**(4)**

DO NOT WRITE IN THIS AREA
DO NOT WRITE IN THIS AREA
DO NOT WRITE IN THIS AREA

www.dynamicpapers.com

DO NOT WRITE IN THIS AREA

DO NOT WRITE IN THIS AREA

DO NOT WRITE IN THIS AREA

(b) The parachute was disconnected when Schiaparelli was at a height of 2.0 m from the surface of Mars and travelling at a speed of 0.45 m/s.

Calculate the speed of the spacecraft just before it hits the surface of Mars.
[acceleration of free-fall on Mars = 3.4 m/s$^2$]

**(4)**

speed = ..... m/s

(c) Suggest why Mars has a lower gravitational field strength than Earth.

**(1)**

.....

.....

.....

.....

**(Total for Question 8 = 12 marks)**

www.dynamicpapers.com

**9** (a) The diagram shows a nuclear reactor.

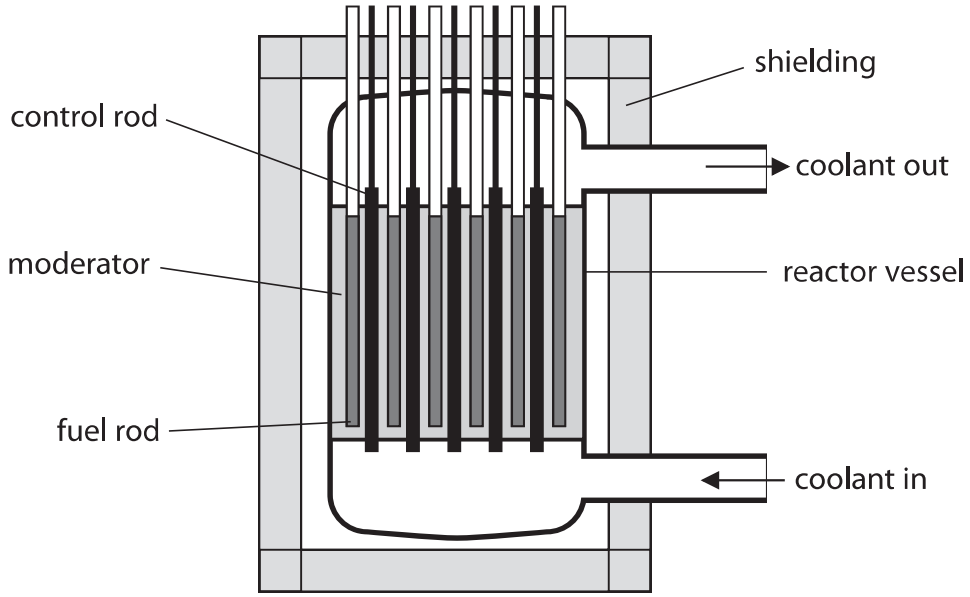


Each part of the nuclear reactor has a function and is made of a suitable material for its function.

Complete the table by giving the missing information.

**(5)**

| Part | Function | Suitable material |
|---|---|---|
| control rod | | boron |
| moderator | | graphite |
| shielding | prevents irradiation of workers | |
| fuel rod | | |

DO NOT WRITE IN THIS AREA
DO NOT WRITE IN THIS AREA
DO NOT WRITE IN THIS AREA

www.dynamicpapers.com

DO NOT WRITE IN THIS AREA

DO NOT WRITE IN THIS AREA

DO NOT WRITE IN THIS AREA

(b) Heavy water is a compound of oxygen and an isotope of hydrogen called deuterium.

Deuterium is formed by the fusion of protons.

(i) State the meaning of the term **isotope**.

**(2)**

(ii) Explain the difference between nuclear fission and nuclear fusion.

**(2)**

(iii) State a location where nuclear fusion takes place.

**(1)**

(iv) Explain why fusion cannot take place at low temperature or low pressure.

**(2)**

**(Total for Question 9 = 12 marks)**

www.dynamicpapers.com

DO NOT WRITE IN THIS AREA

DO NOT WRITE IN THIS AREA

DO NOT WRITE IN THIS AREA

**BLANK PAGE**

www.dynamicpapers.com

**10** This question is about voltage and current.

(a) The diagram shows two resistors connected to a battery.

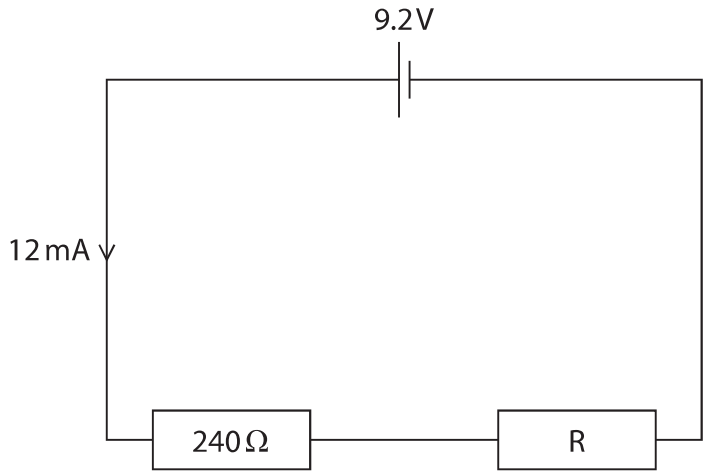


Calculate the voltage across resistor R.

**(4)**

voltage = ..... V

DO NOT WRITE IN THIS AREA
DO NOT WRITE IN THIS AREA
DO NOT WRITE IN THIS AREA

www.dynamicpapers.com

(b) The diagram shows the parts of an ammeter.
The pointer is connected to the coil so they can move together.

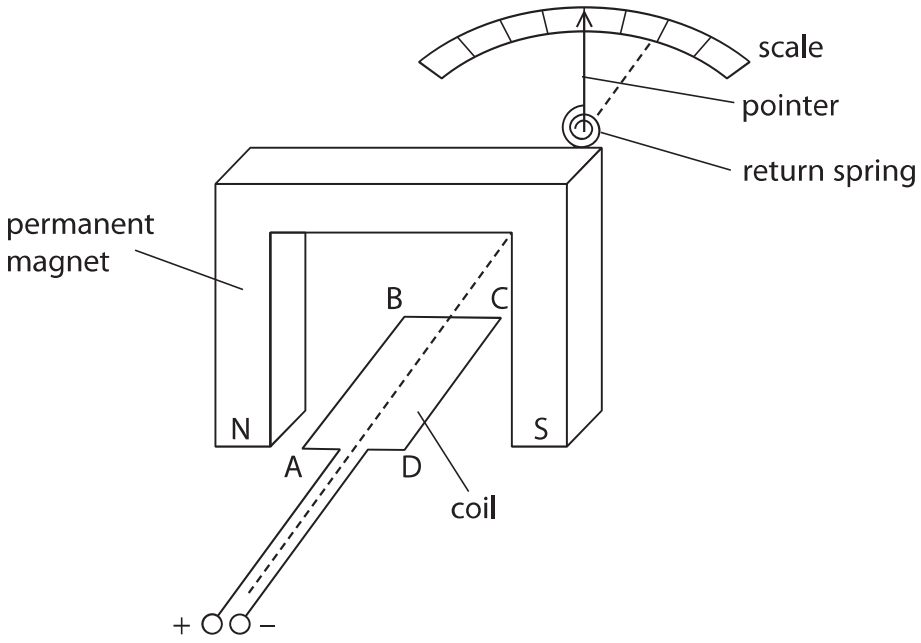


(i) Explain what happens when there is a current in the coil.

**(3)**

.....

.....

.....

.....

.....

.....

(ii) Draw an arrow on the diagram to show the force acting on side CD of the coil when there is a current in the coil.

**(1)**

DO NOT WRITE IN THIS AREA
DO NOT WRITE IN THIS AREA
DO NOT WRITE IN THIS AREA

www.dynamicpapers.com

(iii) Explain how the ammeter could be changed so that it could measure smaller currents.

**(3)**

.....

.....

.....

.....

.....

.....

**(Total for Question 10 = 11 marks)**

DO NOT WRITE IN THIS AREA
DO NOT WRITE IN THIS AREA
DO NOT WRITE IN THIS AREA

www.dynamicpapers.com

**11** The diagram shows a manometer, a device used for measuring differences in pressure.

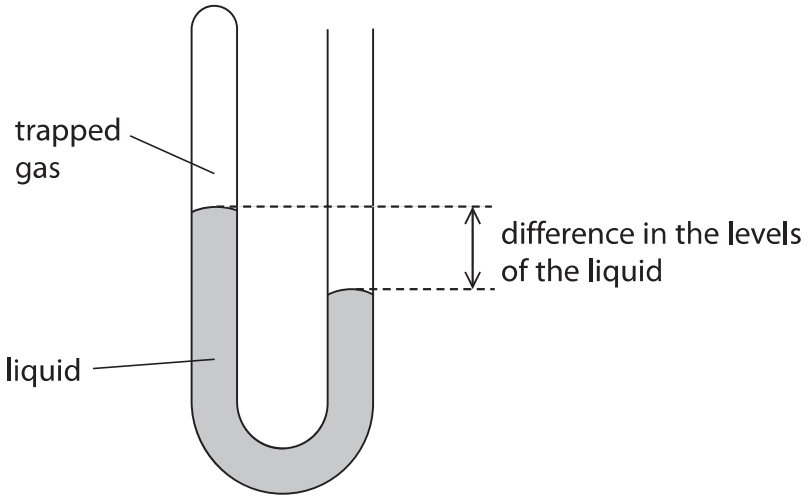


(a) One side of the manometer has some trapped gas. The other side is left open to the atmosphere.

The difference in pressure can be calculated using this formula.

[difference in pressure = height × density × 10]

The density of the liquid is $1.3 \times 10^4$ kg/m$^3$.

The difference in the levels of the liquid is 3.8 cm.

Calculate the difference in pressure between the atmosphere and the trapped gas.

**(3)**

difference in pressure = ..... Pa

DO NOT WRITE IN THIS AREA
DO NOT WRITE IN THIS AREA
DO NOT WRITE IN THIS AREA

www.dynamicpapers.com

DO NOT WRITE IN THIS AREA

DO NOT WRITE IN THIS AREA

DO NOT WRITE IN THIS AREA

(b) The temperature and pressure of the trapped gas increase when it is warmed.

(i) Explain, in terms of particles, why the pressure of the trapped gas increases.

**(3)**

.....

.....

.....

.....

.....

.....

(ii) The pressure of the trapped gas in the manometer is $9.95 \times 10^4$ Pa and the temperature is 16 °C.

Calculate the new pressure of the trapped gas if the temperature increases to 32 °C.

[assume volume of the trapped gas remains constant]

**(4)**

new pressure = ..... Pa

**(Total for Question 11 = 10 marks)**

www.dynamicpapers.com

**12** (a) The diagram shows a ball of dough, of mass 580 g, held at a height of 92 cm above the floor.

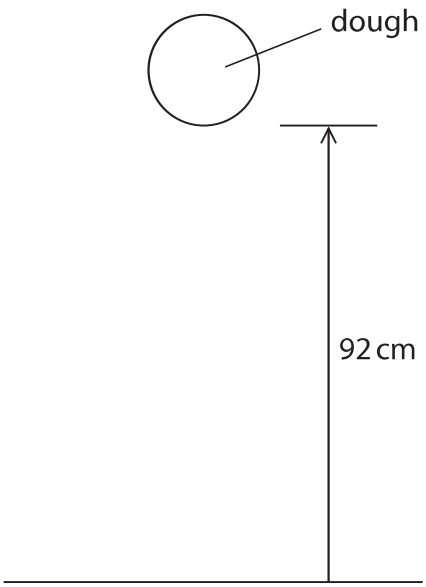


Calculate the increase in gravitational potential energy (GPE) stored in the ball of dough when it is above the floor.

**(3)**

GPE = ..... J

DO NOT WRITE IN THIS AREA
DO NOT WRITE IN THIS AREA
DO NOT WRITE IN THIS AREA

www.dynamicpapers.com

DO NOT WRITE IN THIS AREA

DO NOT WRITE IN THIS AREA

DO NOT WRITE IN THIS AREA

(b) The ball of dough hits the floor and does not rebound.

Describe the energy transfers taking place from when the dough is dropped to after it has hit the floor.

You should refer to energy stores as well as transfers between energy stores at these stages.

- before the dough is dropped
- just before the dough hits the floor
- after the dough has hit the floor

**(4)**

**(Total for Question 12 = 7 marks)**

**TOTAL FOR PAPER = 110 MARKS**

www.dynamicpapers.com

DO NOT WRITE IN THIS AREA

DO NOT WRITE IN THIS AREA

DO NOT WRITE IN THIS AREA

**BLANK PAGE**