www.dynamicpapers.com

Please check the examination details below before entering your candidate information

Candidate surname	Other names

Pearson Edexcel International GCSE

Centre Number | | | | | |

Candidate Number | | | | |

Tuesday 7 January 2020

Morning (Time: 2 hours) | Paper Reference **4MA1/1H**

Mathematics A

Paper 1H

Higher Tier



You must have:
Ruler graduated in centimetres and millimetres, protractor, compasses, pen, HB pencil, eraser, calculator. Tracing paper may be used.

Total Marks

Instructions

- Use **black** ink or ball-point pen.
- **Fill in the boxes** at the top of this page with your name, centre number and candidate number.
- Answer **all** questions.
- Without sufficient working, correct answers may be awarded no marks.
- Answer the questions in the spaces provided
  – *there may be more space than you need.*
- **Calculators may be used**.
- You must **NOT** write anything on the formulae page.
  Anything you write on the formulae page will gain NO credit.

Information

- The total mark for this paper is 100.
- The marks for **each** question are shown in brackets
  – *use this as a guide as to how much time to spend on each question.*

Advice

- Read each question carefully before you start to answer it.
- Check your answers if you have time at the end.

Turn over ▶

P59756A

©2020 Pearson Education Ltd.

1/1/1/

P 5 9 7 5 6 A 0 1 2 8

Pearson

www.dynamicpapers.com

International GCSE Mathematics

Formulae sheet – Higher Tier

Arithmetic series

Sum to n terms, $S_n = \frac{n}{2}[2a + (n-1)d]$

The quadratic equation

The solutions of $ax^2 + bx + c = 0$ where $a \neq 0$ are given by:

$$x = \frac{-b \pm \sqrt{b^2 - 4ac}}{2a}$$

Area of trapezium $= \frac{1}{2}(a+b)h$

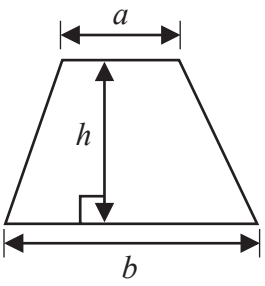

Trigonometry

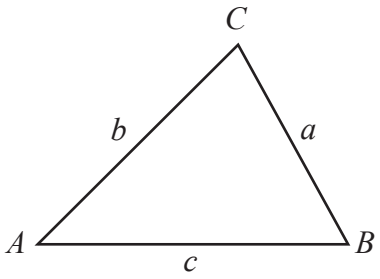

In any triangle ***ABC***

Sine Rule $\frac{a}{\sin A} = \frac{b}{\sin B} = \frac{c}{\sin C}$

Cosine Rule $a^2 = b^2 + c^2 - 2bc\cos A$

Area of triangle $= \frac{1}{2}ab\sin C$

Volume of cone $= \frac{1}{3}\pi r^2 h$

Curved surface area of cone $= \pi r l$

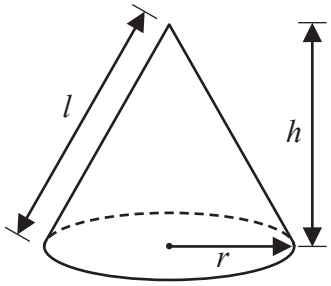

Volume of prism
= area of cross section × length

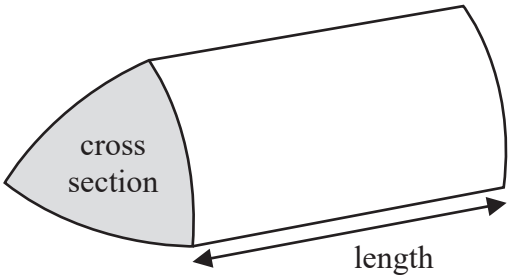

Volume of cylinder $= \pi r^2 h$
Curved surface area of cylinder $= 2\pi r h$

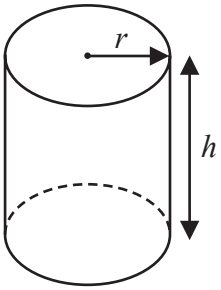

Volume of sphere $= \frac{4}{3}\pi r^3$

Surface area of sphere $= 4\pi r^2$

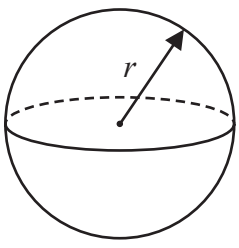

DO NOT WRITE IN THIS AREA
DO NOT WRITE IN THIS AREA
DO NOT WRITE IN THIS AREA

www.dynamicpapers.com

DO NOT WRITE IN THIS AREA
DO NOT WRITE IN THIS AREA
DO NOT WRITE IN THIS AREA

Answer all TWENTY TWO questions.

Write your answers in the spaces provided.

You must write down all the stages in your working.

1 The point A has coordinates $(5, -4)$
The point B has coordinates $(13, 1)$

(a) Work out the coordinates of the midpoint of AB.

(..... , ...)

(2)

Line **L** has equation $y = 2 - 3x$

(b) Write down the gradient of line **L**.

.....

(1)

Line **L** has equation $y = 2 - 3x$

(c) Does the point with coordinates $(100, -302)$ lie on line **L**?
You must give a reason for your answer.

.....

.....

.....

(1)

(Total for Question 1 is 4 marks)

www.dynamicpapers.com

2 Find the lowest common multiple (LCM) of 28 and 105

.....

(Total for Question 2 is 2 marks)

DO NOT WRITE IN THIS AREA
DO NOT WRITE IN THIS AREA
DO NOT WRITE IN THIS AREA

www.dynamicpapers.com

3 The diagram shows a shape.

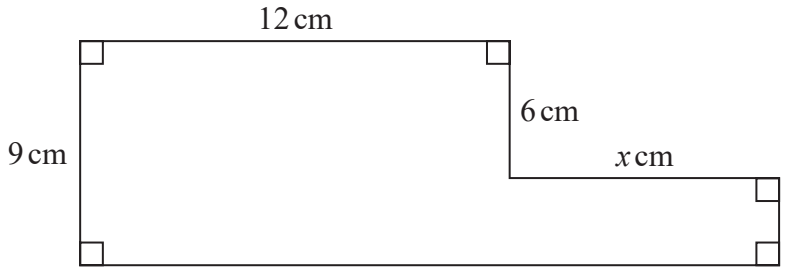

Diagram **NOT** accurately drawn

The shape has area 129 cm^2

Work out the value of x.

x = ...

(Total for Question 3 is 4 marks)

DO NOT WRITE IN THIS AREA
DO NOT WRITE IN THIS AREA
DO NOT WRITE IN THIS AREA

www.dynamicpapers.com

4 The table shows information about the weights, in kilograms, of 40 babies.

Weight (w kg)	Frequency
$2 < w \leqslant 3$	12
$3 < w \leqslant 4$	16
$4 < w \leqslant 5$	9
$5 < w \leqslant 6$	2
$6 < w \leqslant 7$	1

(a) Write down the modal class.

.....

(1)

(b) Work out an estimate for the mean weight of the 40 babies.

..... kg

(4)

One of the 40 babies is going to be chosen at random.

(c) Find the probability that this baby has a weight of more than 5 kg.

.....

(2)

(Total for Question 4 is 7 marks)

DO NOT WRITE IN THIS AREA
DO NOT WRITE IN THIS AREA
DO NOT WRITE IN THIS AREA

www.dynamicpapers.com

5 120 children go on an activity holiday.
The ratio of the number of girls to the number of boys is 3 : 5

On Sunday, all the children either go sailing or go climbing.

$\frac{16}{25}$ of the boys go climbing.

Twice as many girls go sailing as go climbing.

Work out how many children go sailing on Sunday.

.....

(Total for Question 5 is 6 marks)

DO NOT WRITE IN THIS AREA
DO NOT WRITE IN THIS AREA
DO NOT WRITE IN THIS AREA

www.dynamicpapers.com

6 (a) Write 7.8×10^{-4} as an ordinary number.

.....

(1)

(b) Work out $\dfrac{5.6 \times 10^4 + 7 \times 10^3}{2.8 \times 10^{-3}}$

Give your answer in standard form.

.....

(2)

(Total for Question 6 is 3 marks)

7 (a) Expand and simplify $(m - 8)(m + 5)$

.....

(2)

(b) Factorise fully $5y + 20y^2$

.....

(2)

DO NOT WRITE IN THIS AREA
DO NOT WRITE IN THIS AREA
DO NOT WRITE IN THIS AREA

www.dynamicpapers.com

DO NOT WRITE IN THIS AREA
DO NOT WRITE IN THIS AREA
DO NOT WRITE IN THIS AREA

(c) Simplify $(p^2 + 3)^0$

.....

(1)

(d) Solve $3(2x - 5) = \dfrac{9 - x}{2}$

Show clear algebraic working.

$x =$ .....

(4)

(Total for Question 7 is 9 marks)

www.dynamicpapers.com

8

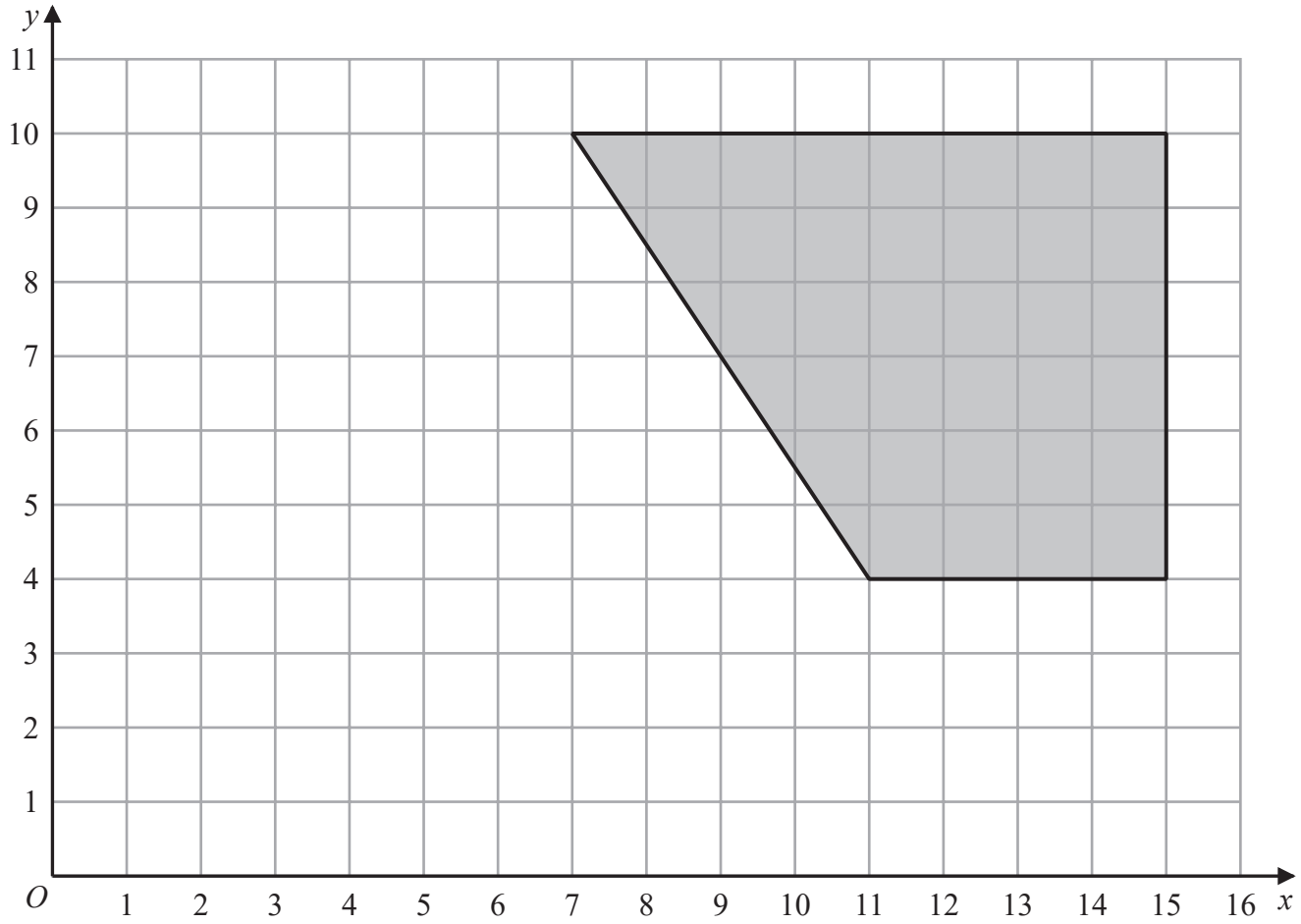

On the grid, enlarge the shaded shape with scale factor $\frac{1}{2}$ and centre (1, 2)

(Total for Question 8 is 2 marks)

DO NOT WRITE IN THIS AREA
DO NOT WRITE IN THIS AREA
DO NOT WRITE IN THIS AREA

www.dynamicpapers.com

9 Here is a right-angled triangle.

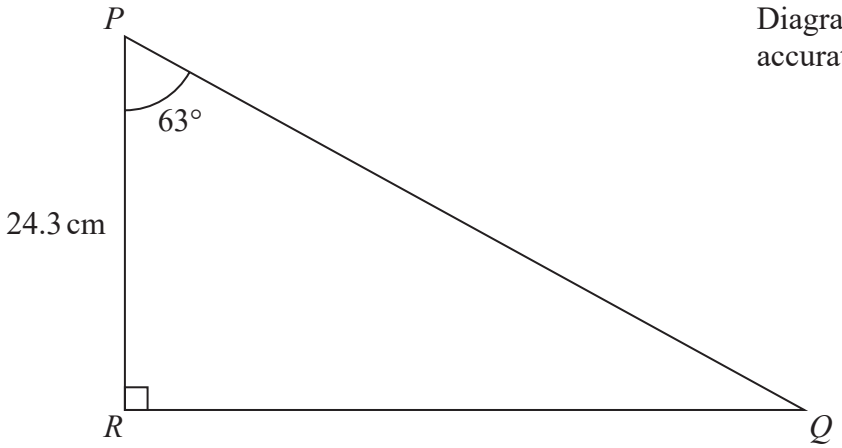

Diagram **NOT** accurately drawn

Calculate the length of PQ.
Give your answer correct to 3 significant figures.

..... cm

(Total for Question 9 is 3 marks)

DO NOT WRITE IN THIS AREA
DO NOT WRITE IN THIS AREA
DO NOT WRITE IN THIS AREA

www.dynamicpapers.com

10 The shaded region in the diagram is bounded by three lines.
The equation of one of the lines is given.

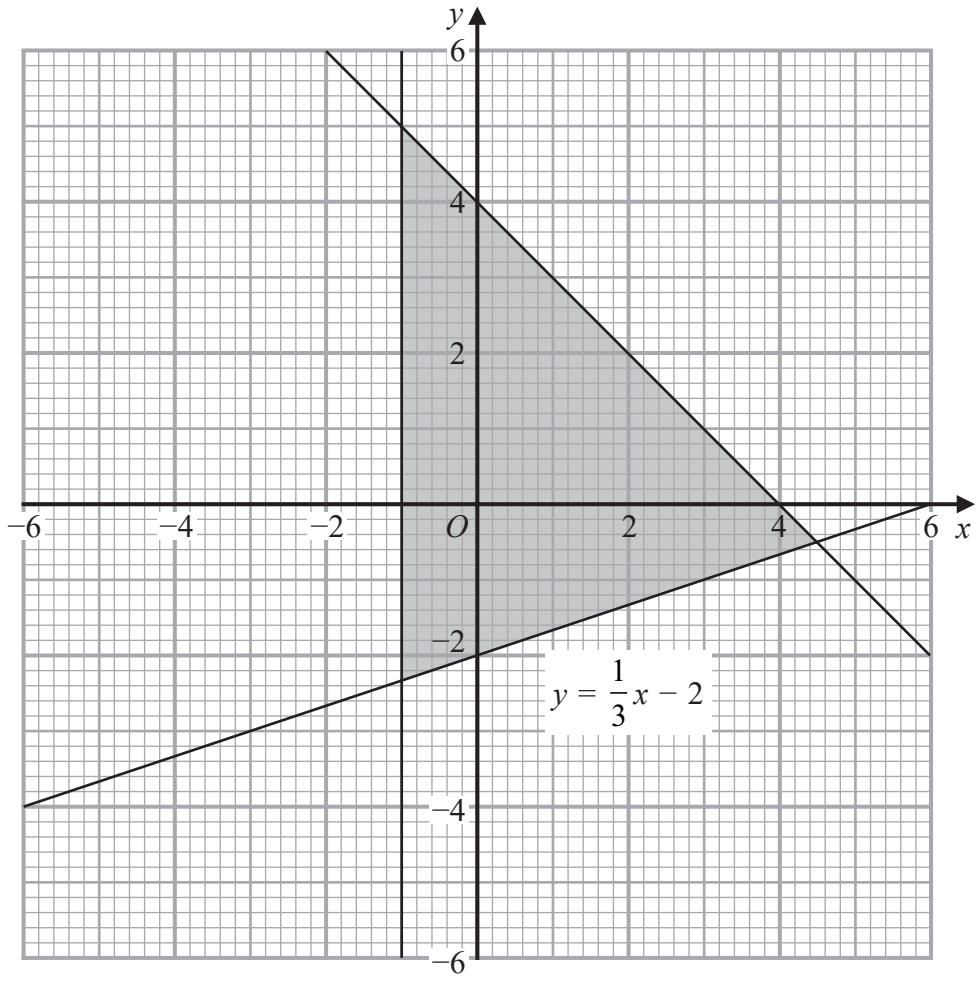

Write down the three inequalities that define the shaded region.

.....

.....

.....

(Total for Question 10 is 3 marks)

DO NOT WRITE IN THIS AREA
DO NOT WRITE IN THIS AREA
DO NOT WRITE IN THIS AREA

www.dynamicpapers.com

11 Max invests $6000 in a savings account for 3 years.
The account pays compound interest at a rate of 1.5% per year for the first 2 years.

The compound interest rate changes for the third year.
At the end of 3 years, there is a total of $6311.16 in the account.

Work out the compound interest rate for the third year.
Give your answer correct to 1 decimal place.

..... %

(Total for Question 11 is 3 marks)

DO NOT WRITE IN THIS AREA
DO NOT WRITE IN THIS AREA
DO NOT WRITE IN THIS AREA

www.dynamicpapers.com

12 A total of 80 men and women took part in a race.
The cumulative frequency graph gives information about the times, in minutes, they took for the race.

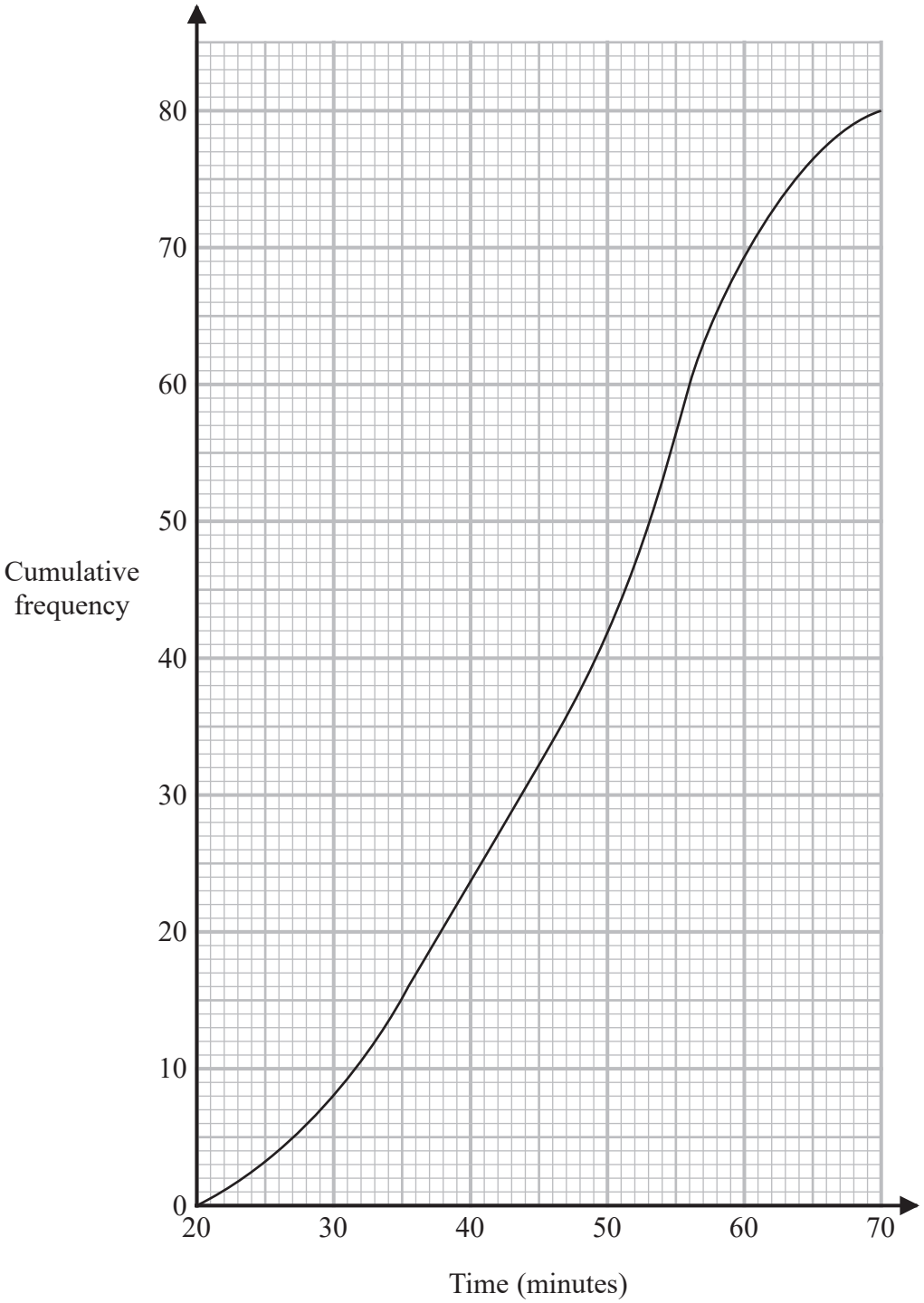

DO NOT WRITE IN THIS AREA
DO NOT WRITE IN THIS AREA
DO NOT WRITE IN THIS AREA

www.dynamicpapers.com

(a) Use the graph to find an estimate for the interquartile range.

..... minutes

(2)

60% of the men took 50 minutes or less for the race.
No women took 50 minutes or less for the race.

(b) Work out an estimate for the number of men who took part in the race.

.....

(3)

(Total for Question 12 is 5 marks)

DO NOT WRITE IN THIS AREA
DO NOT WRITE IN THIS AREA
DO NOT WRITE IN THIS AREA

www.dynamicpapers.com

13 The diagram shows a solid cube.
The cube is placed on a table so that the whole of one face of the cube is in contact with the table.

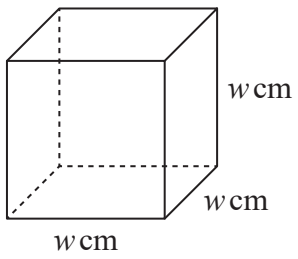

Diagram **NOT** accurately drawn

The cube exerts a force of 56 newtons on the table.
The pressure on the table due to the cube is 0.14 newtons/cm^2

$$\text{pressure} = \frac{\text{force}}{\text{area}}$$

Work out the volume of the cube.

..... cm^3

(Total for Question 13 is 4 marks)

DO NOT WRITE IN THIS AREA
DO NOT WRITE IN THIS AREA
DO NOT WRITE IN THIS AREA

www.dynamicpapers.com

14 The diagram shows parallelogram *EFGH*.

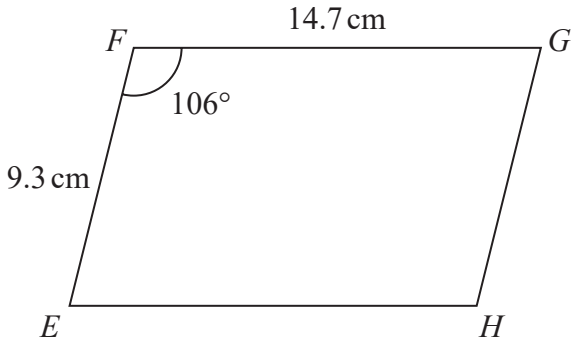

Diagram **NOT** accurately drawn

EF = 9.3 cm
FG = 14.7 cm
Angle *EFG* = 106°

(a) Work out the area of the parallelogram.
Give your answer correct to 3 significant figures.

..... cm^2
(2)

(b) Work out the length of the diagonal *EG* of the parallelogram.
Give your answer correct to 3 significant figures.

..... cm
(3)

(Total for Question 14 is 5 marks)

DO NOT WRITE IN THIS AREA
DO NOT WRITE IN THIS AREA
DO NOT WRITE IN THIS AREA

www.dynamicpapers.com

15

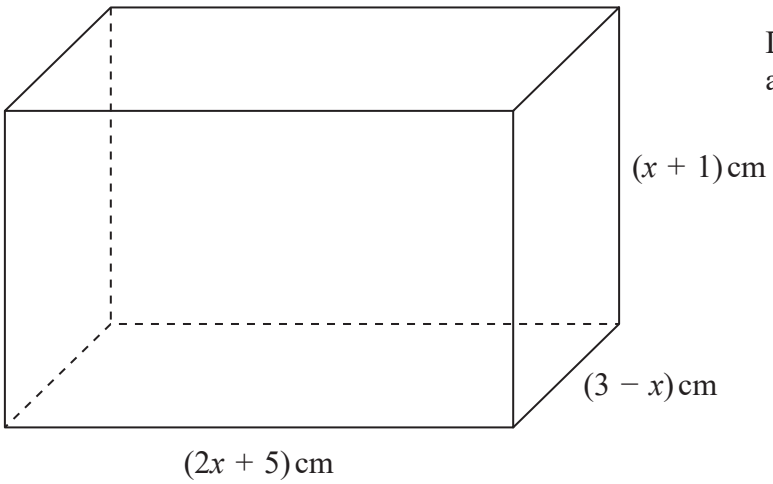

Diagram **NOT** accurately drawn

The diagram shows a cuboid of volume V cm^3

(a) Show that $V = 15 + 16x - x^2 - 2x^3$

(3)

DO NOT WRITE IN THIS AREA
DO NOT WRITE IN THIS AREA
DO NOT WRITE IN THIS AREA

www.dynamicpapers.com

There is a value of x for which the volume of the cuboid is a maximum.

(b) Find this value of x.
Show your working clearly.
Give your answer correct to 3 significant figures.

$x =$ .....

(5)

(Total for Question 15 is 8 marks)

DO NOT WRITE IN THIS AREA
DO NOT WRITE IN THIS AREA
DO NOT WRITE IN THIS AREA

www.dynamicpapers.com

16 $P = \dfrac{2a - c}{d}$

$a = 58.4$ correct to 3 significant figures.
$c = 20$ correct to 2 significant figures.
$d = 3.6$ correct to 2 significant figures.

Work out the upper bound for the value of P.
Show your working clearly.
Give your answer correct to 2 decimal places.

.....

(Total for Question 16 is 3 marks)

DO NOT WRITE IN THIS AREA
DO NOT WRITE IN THIS AREA
DO NOT WRITE IN THIS AREA

www.dynamicpapers.com

DO NOT WRITE IN THIS AREA
DO NOT WRITE IN THIS AREA
DO NOT WRITE IN THIS AREA

17 (a) Show that $\left(6 + 2\sqrt{12}\right)^2 = 12\left(7 + 4\sqrt{3}\right)$

Show each stage of your working.

(3)

(b) Simplify fully $\left(\frac{27a^{12}}{t^{15}}\right)^{-\frac{2}{3}}$

(3)

(Total for Question 17 is 6 marks)

www.dynamicpapers.com

18 There are 16 sweets in a bowl.

4 of the sweets are blackcurrant.
5 of the sweets are lemon.
7 of the sweets are orange.

Anna, Ravi and Sam each take at random one sweet from the bowl.

Work out the probability that the 5 lemon sweets are still in the bowl.

.....

(Total for Question 18 is 4 marks)

DO NOT WRITE IN THIS AREA
DO NOT WRITE IN THIS AREA
DO NOT WRITE IN THIS AREA

www.dynamicpapers.com

19 The diagram shows a cuboid *ABCDEFGH*.

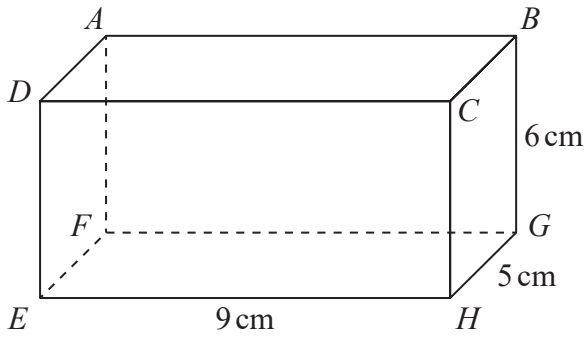

Diagram **NOT** accurately drawn

EH = 9 cm, *HG* = 5 cm and *GB* = 6 cm.

Work out the size of the angle between *AH* and the plane *EFGH*.
Give your answer correct to 3 significant figures.

.....°

(Total for Question 19 is 4 marks)

DO NOT WRITE IN THIS AREA
DO NOT WRITE IN THIS AREA
DO NOT WRITE IN THIS AREA

www.dynamicpapers.com

20 The curve **C** has equation $y = 4(x - 1)^2 - a$ where $a > 4$

Using the axes below, sketch the curve **C**.
On your sketch show clearly, in terms of a,

(i) the coordinates of any points of intersection of **C** with the coordinate axes,

(ii) the coordinates of the turning point.

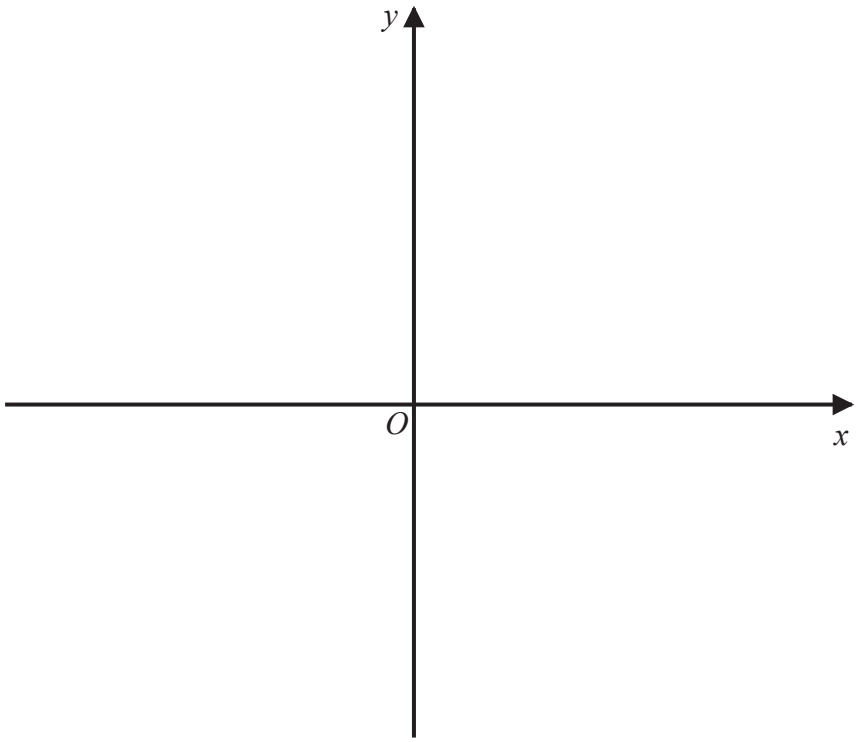

(Total for Question 20 is 4 marks)

DO NOT WRITE IN THIS AREA
DO NOT WRITE IN THIS AREA
DO NOT WRITE IN THIS AREA

www.dynamicpapers.com

DO NOT WRITE IN THIS AREA
DO NOT WRITE IN THIS AREA
DO NOT WRITE IN THIS AREA

21 The functions f and g are such that

$$f(x) = x^2 - 2x \qquad g(x) = x + 3$$

The function h is such that $h(x) = fg(x)$ for $x \geqslant -2$

Express the inverse function $h^{-1}(x)$ in the form $h^{-1}(x) = \ldots$

$h^{-1}(x) =$ .....

(Total for Question 21 is 5 marks)

www.dynamicpapers.com

22 Triangle HJK is isosceles with $HJ = HK$ and $JK = \sqrt{80}$

H is the point with coordinates $(-4, 1)$
J is the point with coordinates $(j, 15)$ where $j < 0$
K is the point with coordinates $(6, k)$

M is the midpoint of JK.
The gradient of HM is 2

Find the value of j and the value of k.

DO NOT WRITE IN THIS AREA
DO NOT WRITE IN THIS AREA
DO NOT WRITE IN THIS AREA

www.dynamicpapers.com

DO NOT WRITE IN THIS AREA
DO NOT WRITE IN THIS AREA
DO NOT WRITE IN THIS AREA

$j =$ .....

$k =$ .....

(Total for Question 22 is 6 marks)

TOTAL FOR PAPER IS 100 MARKS

www.dynamicpapers.com

DO NOT WRITE IN THIS AREA

DO NOT WRITE IN THIS AREA

DO NOT WRITE IN THIS AREA

BLANK PAGE