AQA

GCSE PHYSICS

H

Higher Tier Paper 2H

Specimen 2018 Time allowed: 1 hour 45 minutes

Materials

For this paper you must have:

- a ruler
- a calculator
- a protractor
- the Physics Equation sheet (enclosed).

Instructions

- Answer all questions in the spaces provided.
- Do all rough work in this book. Cross through any work you do not want to be marked.

Information

- There are 100 marks available on this paper.
- The marks for questions are shown in brackets.
- You are expected to use a calculator where appropriate.
- You are reminded of the need for good English and clear presentation in your answers.
- When answering questions 04.2, 05.1, 11.3 and 12.2 you need to make sure that your answer:
  - is clear, logical, sensibly structured
  - fully meets the requirements of the question
  - shows that each separate point or step supports the overall answer.

Advice

- In all calculations, show clearly how you work out your answer.

Please write clearly, in block capitals.

Centre number ☐☐☐☐☐ Candidate number ☐☐☐☐

Surname

Forename(s)

Candidate signature _____

0 1 A student suspended a spring from a laboratory stand and then hung a weight from the spring.

Figure 1 shows the spring before and after the weight is added.

Figure 1

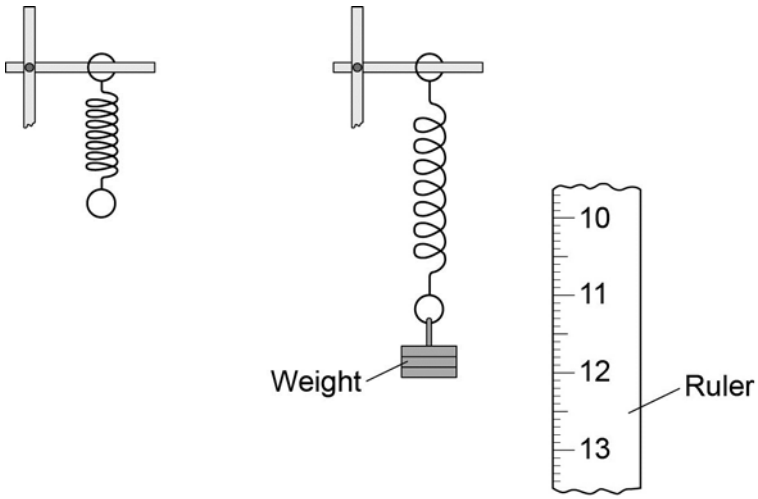

0 1 . 1 Measure the extension of the spring shown in **Figure 1**.

[1 mark]

Extension = _____ mm

The student used the spring, a set of weights and a ruler to investigate how the extension of the spring depended on the weight hanging from the spring.

Before starting the investigation the student wrote the following prediction:

The extension of the spring will be directly proportional to the weight hanging from the spring.

Figure 2 shows how the student arranged the apparatus.

Figure 2

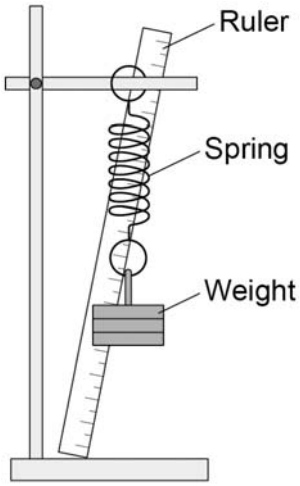

0 1 . 2 Before taking any measurements, the student adjusted the ruler to make it vertical.

Explain why adjusting the ruler was important.

[2 marks]

Question 1 continues on the next page

The student measured the extension of the spring using a range of weights.

The student's data is shown plotted as a graph in **Figure 3**.

Figure 3

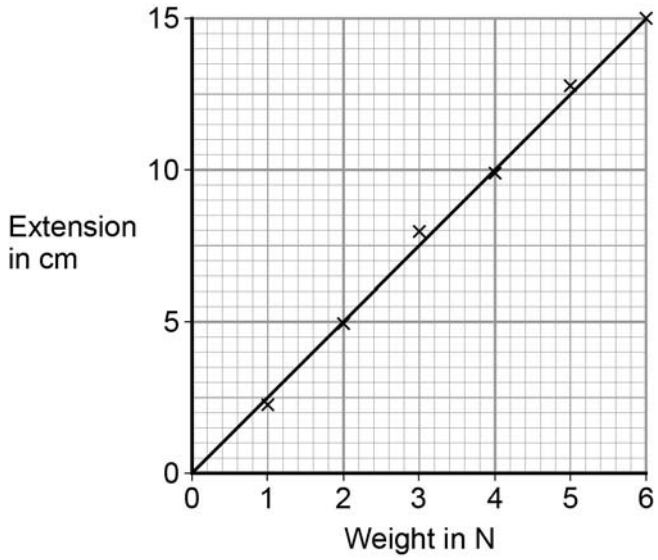

0 1 . 3 What range of weight did the student use?

[1 mark]

0 1 . 4 Why does the data plotted in **Figure 3** support the student's prediction?

[1 mark]

0 1 . 5 Describe **one** technique that you could have used to improve the accuracy of the measurements taken by the student.

[2 marks]

0 1 . 6 The student continued the investigation by increasing the range of weights added to the spring.

All of the data is shown plotted as a graph in **Figure 4**.

Figure 4

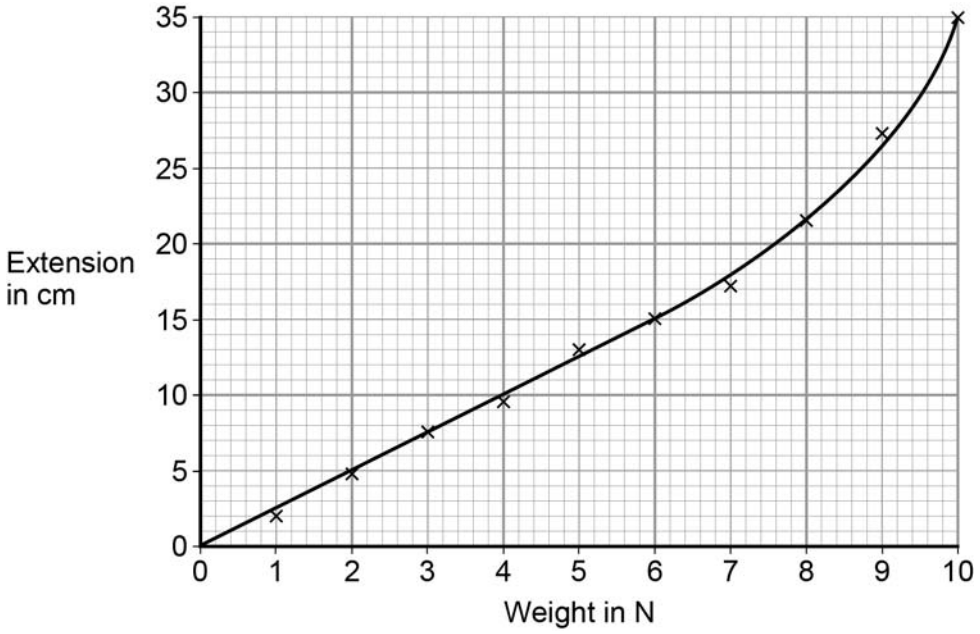

At the end of the investigation, all of the weights were removed from the spring.

What can you conclude from **Figure 4** about the deformation of the spring?

[2 marks]

Give the reason for your conclusion.

0 2 In 1929, the astronomer Edwin Hubble observed that the light from galaxies moving away from the Earth had longer wavelengths than expected.

0 2 . 1 What name is given to this effect?

[1 mark]

0 2 . 2 From his observations, Hubble was able to calculate the speed of a galaxy and the distance of the galaxy from the Earth.

Figure 5 shows the results of Hubble's calculations.

Figure 5

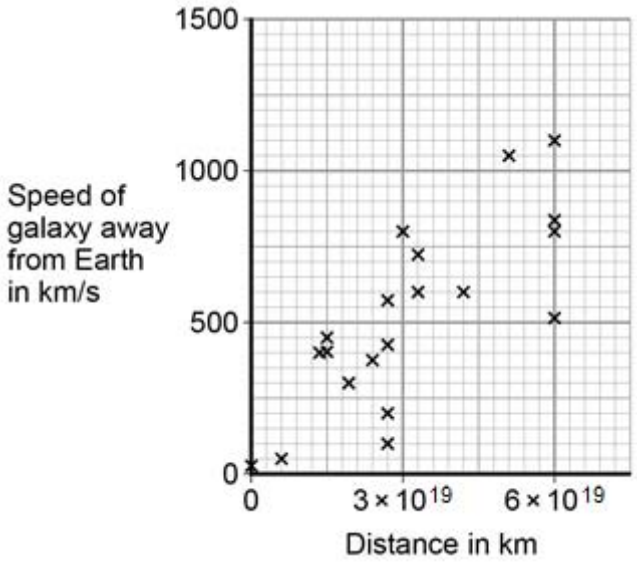

What relationship between the speed of a galaxy and the distance is suggested by Hubble's results?

[1 mark]

The observations made by Hubble support the idea that the Universe is expanding. This means that galaxies are continually moving away from each other and from the Earth.

Figure 6 shows a student using a balloon to model the idea of an expanding Universe.

Some dots, which represent galaxies, were marked on the balloon.
The balloon was then inflated.

Figure 6

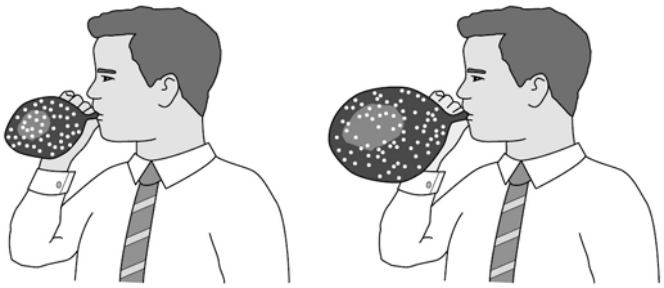

0 2 . 3 Give **one** strength and **one** weakness of this model in representing the idea of an expanding Universe.

[2 marks]

strength

weakness

In the 1950s there were two main theories to explain how the Universe began.

Theory 1	The Universe has always existed, it is continually expanding. New galaxies are formed as older galaxies die out.
Theory 2	The Universe began from a very small region that was extremely hot and dense. The Universe has been expanding ever since.

0 2 . 4 In what way do the observations made by Hubble support both Theory 1 and Theory 2?

[1 mark]

0 2 . 5 Most scientists now believe that Theory 2 is correct.

Suggest what is likely to have caused scientists to start thinking Theory 1 is wrong.

[1 mark]

0 3 A student investigated how the magnification produced by a convex lens varies with the distance (*d*) between the object and the lens.

The student used the apparatus shown in **Figure 7**.

Figure 7

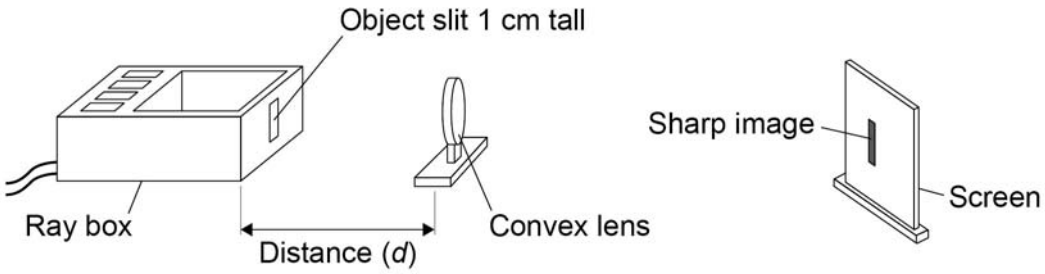

0 3 . 1 The student measured the magnification produced by the lens by measuring the image height in centimetres.

Explain why the image height in centimetres was the same as the magnification.

[2 marks]

The data recorded by the student is given in **Table 1**.

Table 1

Distance between the object and the lens in cm	Magnification
25	4.0
30	2.0
40	1.0
50	0.7
60	0.5

0 3 . 2 It would be difficult to obtain accurate magnification values for distances greater than 60 cm.

Suggest **one** change that could be made so that accurate magnification values could be obtained for distances greater than 60 cm.

[1 mark]

The graph in **Figure 8** is incomplete.

Figure 8

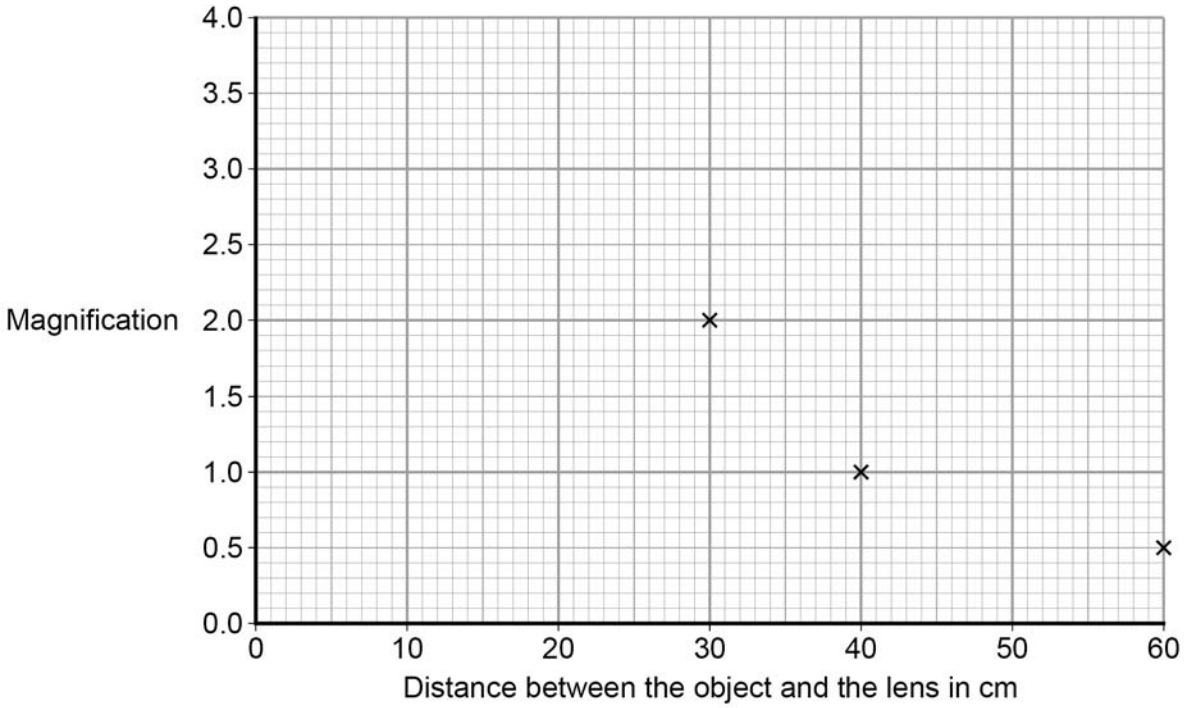

0 3 . 3 Complete the graph in **Figure 8** by plotting the missing data and then drawing a line of best fit.

[2 marks]

0 3 . 4 How many times bigger is the image when the object is 35cm from the lens compared to when the object is 55 cm from the lens?

[2 marks]

Question 3 continues on the next page

0 3 . 5 During the investigation the student also measured the distance between the lens and the image.

Table 2 gives both of the distances measured and the magnification.

Table 2

Distance between the lens and the image in cm	Distance between the lens and the object in cm	Magnification
100	25	4.0
60	30	2.0
40	40	1.0
33	50	0.7
30	60	0.5

Consider the data in **Table 2**.

Give a second way that the student could have determined the magnification of the object.

Justify your answer with a calculation.

[2 marks]

0 3 . 6 Complete the ray diagram in **Figure 9** to show how the convex lens produces the image of a close object.

Use an arrow to represent the image.

[3 marks]

Figure 9

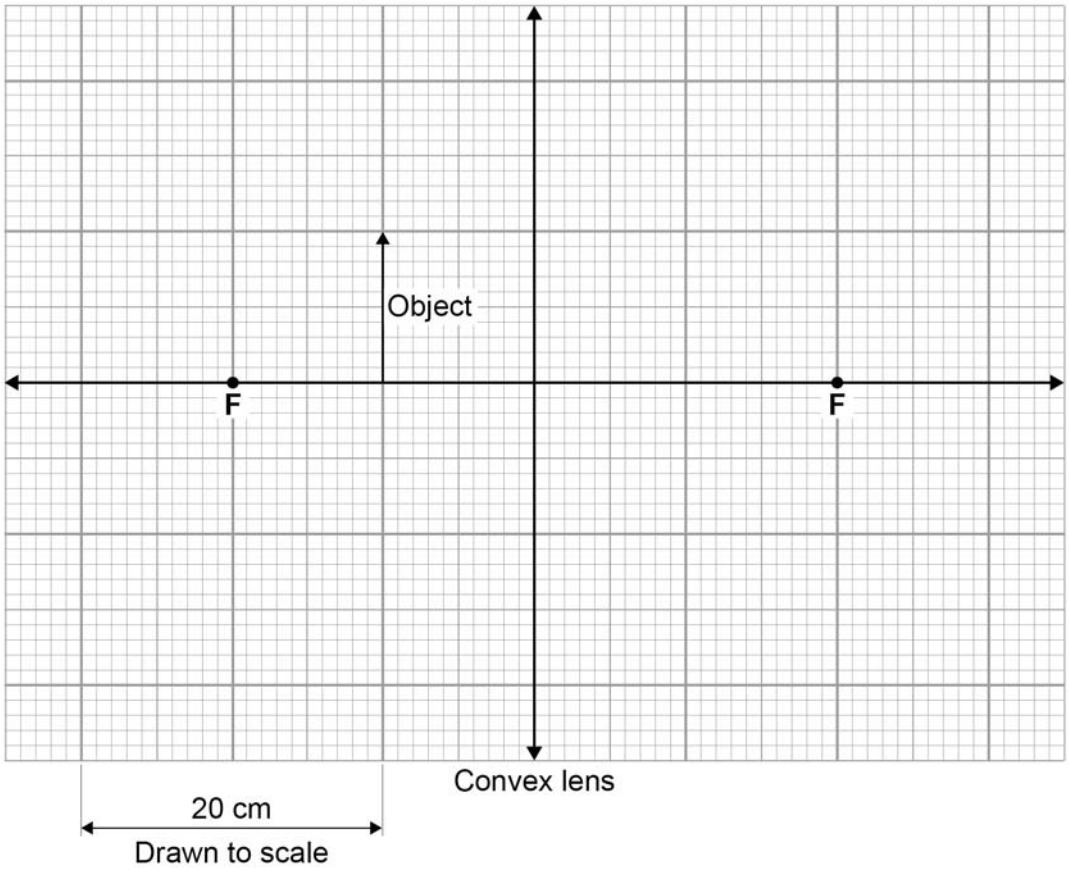

Turn over for the next question

0 4 **Figure 10** shows a straight wire passing through a piece of card.

A current (I) is passing down through the wire.

Figure 10

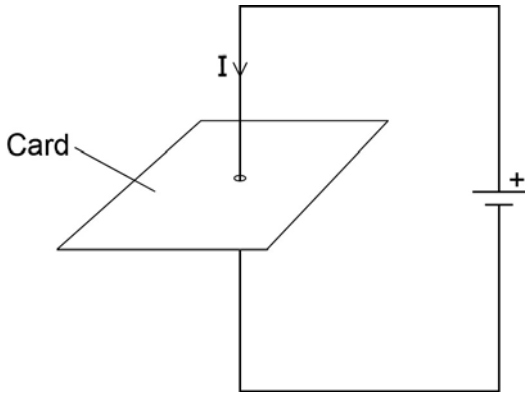

0 4 . 1 Describe how you could show that a magnetic field has been produced around the wire.

[2 marks]

0 4 . 2 **Figure 11** shows the ignition circuit used to switch the starter motor in a car on.

The circuit includes an electromagnetic switch.

Figure 11

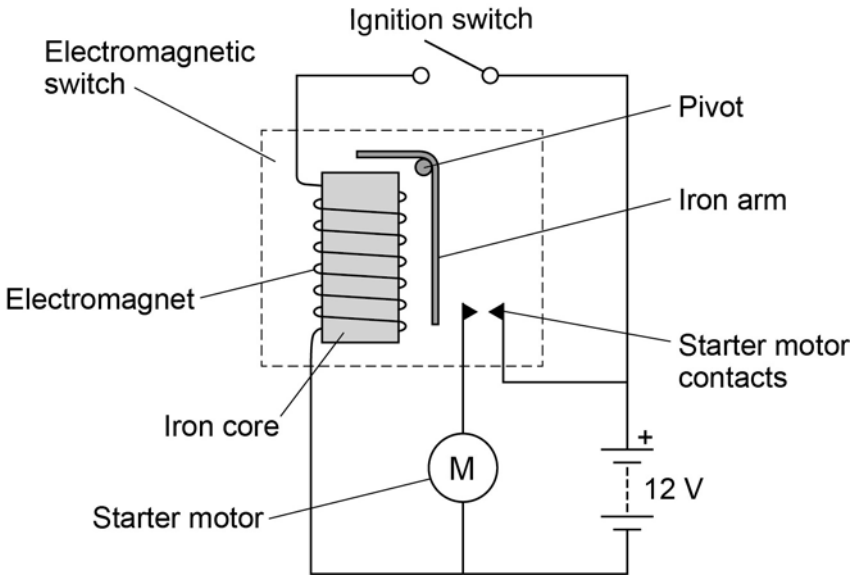

Explain how the ignition circuit works.

[4 marks]

0 5 The data given in **Table 3** was obtained from an investigation into the refraction of light at an air to glass boundary.

Table 3

Angle of incidence	Angle of refraction
20°	13°
30°	19°
40°	25°
50°	30°

0 5 . 1 Describe an investigation a student could complete in order to obtain similar data to that given in **Table 3**.

Your answer should consider any cause of inaccuracy in the data.

A labelled diagram may be drawn as part of your answer.

[6 marks]

0 5 . 2 State the reason why light is refracted as it crosses from air into glass.

[1 mark]

Turn over for the next question

0 6 **Figure 12** shows the construction of a simple transformer.

Figure 12

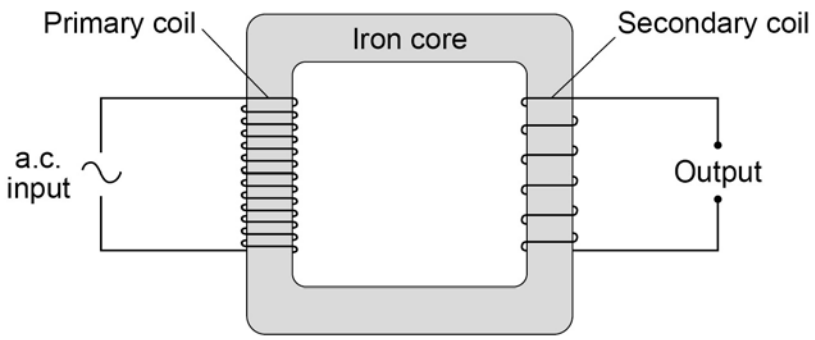

0 6 . 1 Why is iron a suitable material for the core of a transformer?

[1 mark]

Tick **one** box.

It is a metal. ☐

It will not get hot. ☐

It is easily magnetised. ☐

It is an electrical conductor. ☐

A student makes three simple transformers, **J**, **K** and **L**.

Figure 13 shows how the potential difference across the secondary coil of each transformer varies as the potential difference across the primary coil of each transformer is changed.

Figure 13

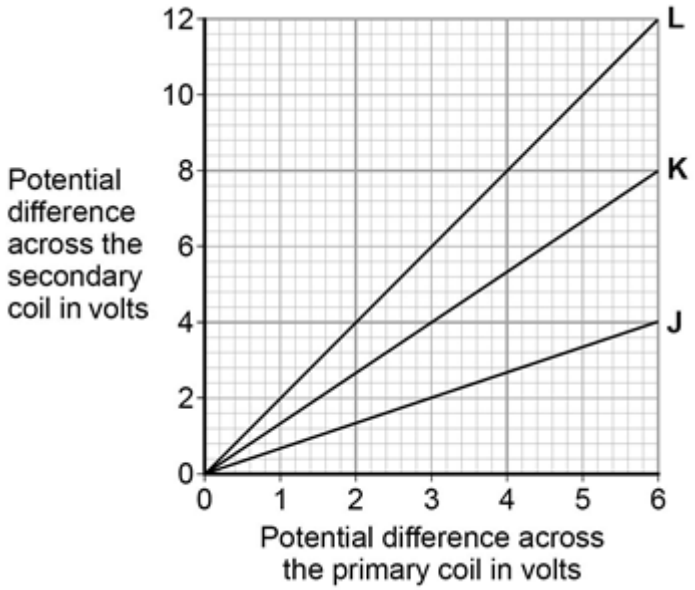

0 6 . 2 How can you tell that transformer **J** is a step-down transformer?

[1 mark]

0 6 . 3 Each of the transformers has 50 turns on the primary coil.

Calculate the number of turns on the secondary coil of transformer **L**.

Use the correct equation from the Physics Equations Sheet.

[3 marks]

Number of turns on the secondary coil = _____

0 7 In 2011, some of the scientists working at the CERN particle laboratory published the results of experiments they had conducted over the previous three years.

The scientists said that the results had shown that a particle, called a neutrino, was able to travel faster than the speed of light.

These unexpected results challenged the physics theory that nothing can travel faster than the speed of light.

0 7 . 1 Suggest why most other scientists thought that the experimental results were unbelievable.

[1 mark]

0 7 . 2 The scientists at CERN believed their results were correct but could not explain them.

Suggest **two** reasons why the scientists decided to publish their results.

[2 marks]

1

2

0 7 . 3 The experiments conducted by the scientists involved measuring the time it took neutrinos to travel from CERN to another laboratory 730 000 m away.

Using the data, the speed of the neutrinos was calculated to be 300 007 400 m/s.

Calculate the time it would take the neutrinos to travel 730 000 m at a speed of 300 007 400 m/s.

Give your answer in standard form.

[3 marks]

Time = _____ s

In 2012, the scientists found that the unexpected results were caused by a timing error.

The error meant that the time recorded was always 60 nanoseconds less than the actual time.

0 7 . 4 Which **one** of the following is the same as 60 nanoseconds?

Tick **one** box.

[1 mark]

60×10^{-3} s ☐

60×10^{-6} s ☐

60×10^{-9} s ☐

0 7 . 5 What name is given to the type of error made by the scientists?

[1 mark]

0 7 . 6 Suggest what the scientists should do to calculate an accurate value for the speed of a neutrino.

[1 mark]

Turn over for the next question

There are no questions printed on this page

0 8 A train travels from town **A** to town **B**.

Figure 14 shows the route taken by the train.
Figure 14 has been drawn to scale.

Figure 14

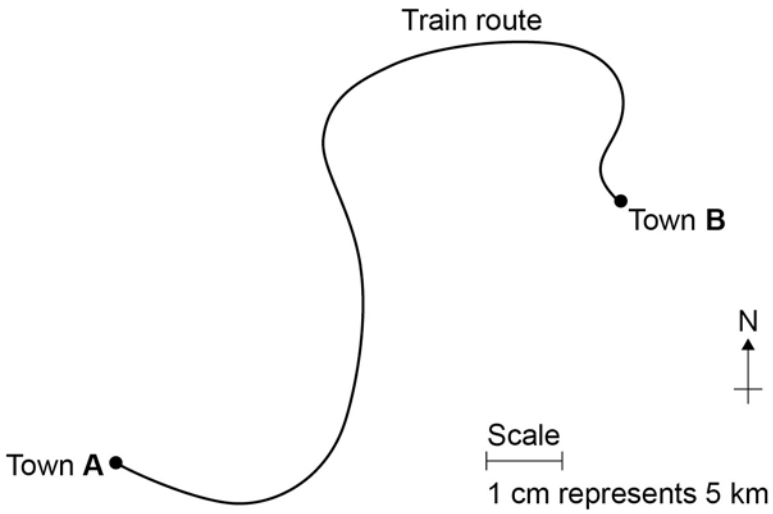

0 8 . 1 The distance the train travels between **A** and **B** is not the same as the displacement of the train.

What is the difference between distance and displacement?

[1 mark]

0 8 . 2 Use **Figure 14** to determine the displacement of the train in travelling from **A** to **B**.

Show how you obtain your answer.

[2 marks]

Displacement = _____ km

Direction = _____

0 8 . 3 There are places on the journey where the train accelerates without changing speed.

Explain how this can happen.

[2 marks]

0 8 . 4 **Figure 15** shows how the velocity of the train changes with time as the train travels along a straight section of the journey.

Figure 15

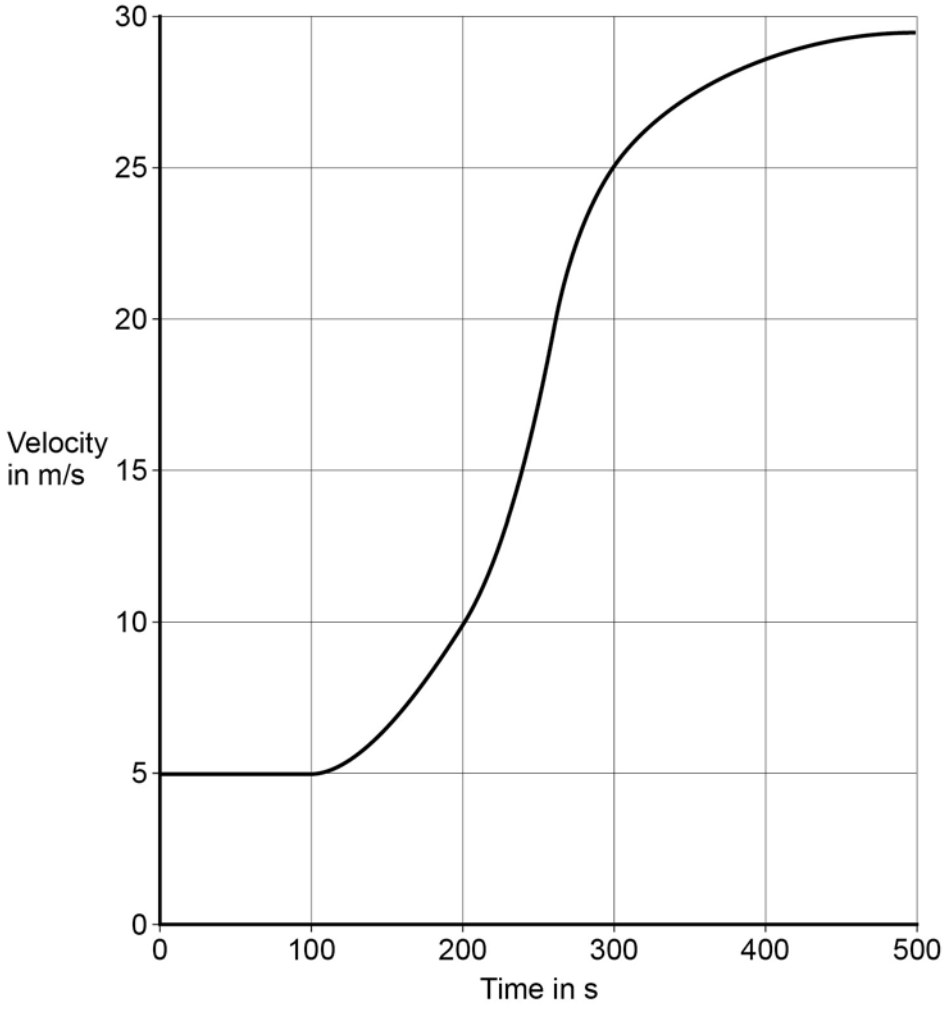

Estimate the distance travelled by the train along the section of the journey shown in **Figure 15**.

To gain full marks you must show how you worked out your answer.

[3 marks]

Distance = _____ m

Turn over for the next question

0 9 The stopping distance of a car is the sum of the thinking distance and the braking distance.

Table 4 shows how the thinking distance and braking distance vary with speed.

Table 4

Speed in m/s	Thinking distance in m	Braking distance in m
10	6	6.0
15	9	13.5
20	12	24.0
25	15	37.5
30	18	54.0

0 9 . 1 What is meant by the braking distance of a vehicle?

[1 mark]

_____

_____

0 9 . 2 The data in **Table 4** refers to a car in good mechanical condition driven by an alert driver.

Explain why the stopping distance of the car increases if the driver is very tired.

[2 marks]

0 9 . 3 A student looks at the data in **Table 4** and writes the following:

thinking distance $\propto$ speed

braking distance $\propto$ speed

Explain whether the student is correct.

[2 marks]

Applying the brakes with too much force can cause a car to skid.

The distance a car skids before stopping depends on the friction between the road surface and the car tyres and also the speed of the car.

Friction can be investigated by pulling a device called a 'sled' across a surface at constant speed.

Figure 16 shows a sled being pulled correctly and incorrectly across a surface.

The constant of friction for the surface is calculated from the value of the force pulling the sled and the weight of the sled.

Figure 16



0 9 . 4 Why is it important that the sled is pulled at a constant speed?

[1 mark]

Tick **one** box.

If the sled accelerates it will be difficult to control. ☐

If the sled accelerates the value for the constant of friction will be wrong. ☐

If the sled accelerates the normal contact force will change. ☐

0 9 . 5 If the sled is pulled at an angle to the surface the value calculated for the constant of friction would not be appropriate.

Explain why.

[2 marks]

0 9 . 6 By measuring the length of the skid marks, an accident investigator determines that the distance a car travelled between the brakes being applied and stopping was 22 m.

The investigator used a sled to determine the friction. The investigator then calculated that the car decelerated at 7.2 m/s^2.

Calculate the speed of the car just before the brakes were applied.

Give your answer to two significant figures.

Use the correct equation from the Physics Equation Sheet.

[3 marks]

Speed = _____ m/s

Turn over for the next question

1 0 **Figure 17** shows how atmospheric pressure varies with altitude.

Figure 17

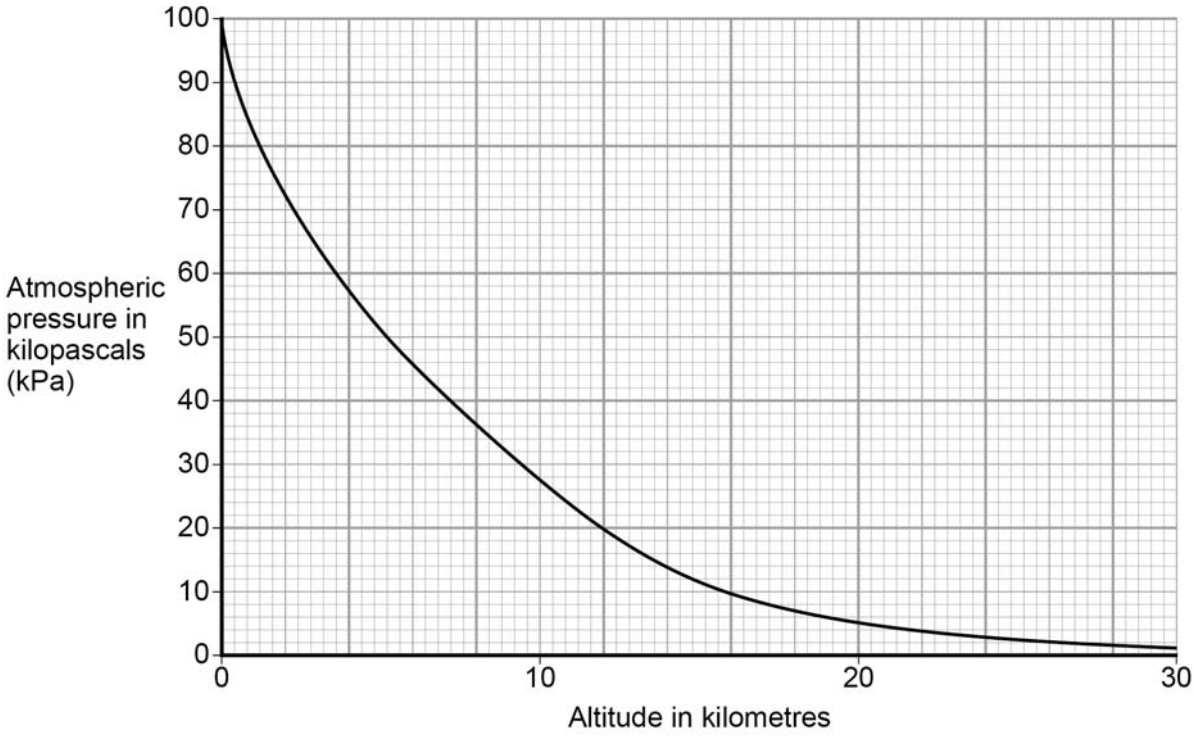

1 0 . 1 Explain why atmospheric pressure decreases with increasing altitude.

[3 marks]

1 0 . 2 When flying, the pressure inside the cabin of an aircraft is kept at 70 kPa.

The aircraft window has an area of 810 cm^2.

Use data from **Figure 17** to calculate the resultant force acting on an aircraft window when the aircraft is flying at an altitude of 12 km.

Give your answer to two significant figures

[5 marks]

Resultant force = _____ N

1 0 . 3 **Figure 18** shows the cross-section of one type of aircraft window.

Figure 18

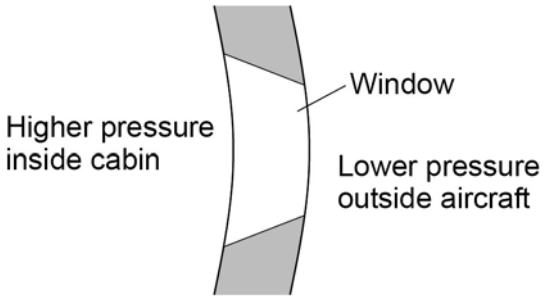

Explain why the window has been designed to have this shape.

[2 marks]

1 1 Waves may be either longitudinal or transverse.

1 1 . 1 Describe the difference between a longitudinal and a transverse wave.

[2 marks]

1 1 . 2 Describe **one** piece of evidence that shows when a sound wave travels through the air it is the wave and not the air itself that travels.

[1 mark]

1 1 . 3 **Figure 19** shows the parts of a moving-coil loudspeaker.

A coil of wire is positioned in the gap between the north and south poles of the cylindrical magnet.

Figure 19

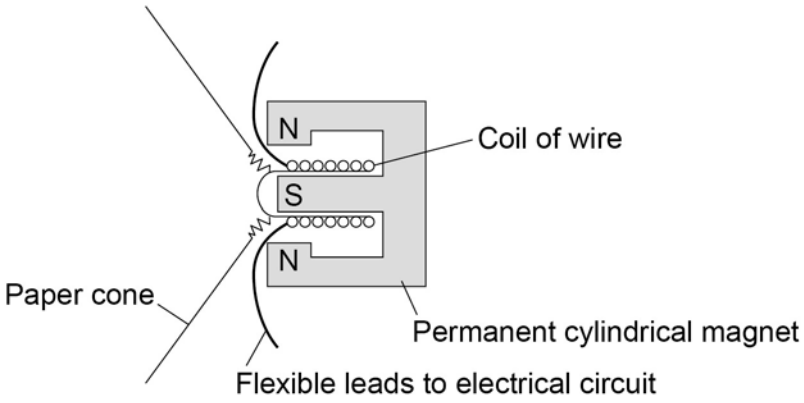

Explain how the loudspeaker converts current in an electrical circuit to a sound wave.

[6 marks]

1 2 **Figure 20** shows a piece of apparatus called a current balance.

Figure 20

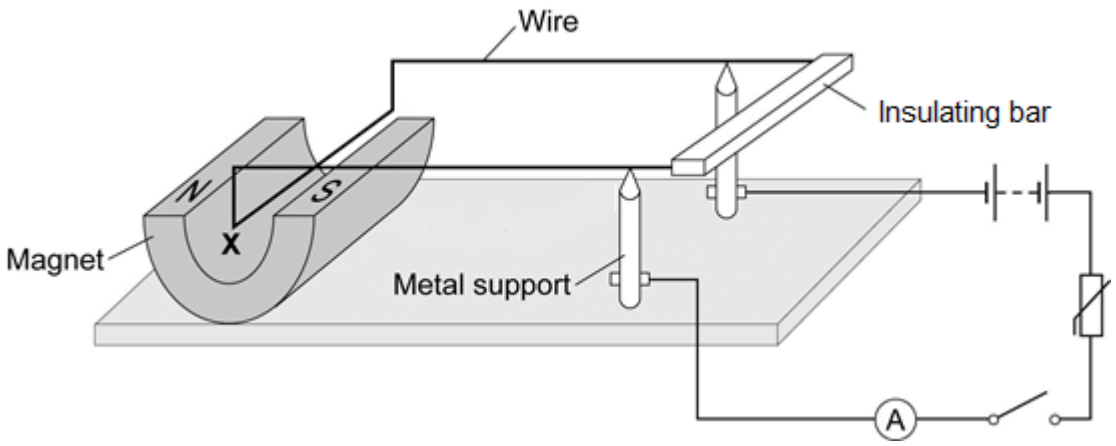

When the switch is closed, the part of the wire labelled **X** experiences a force and moves downwards.

1 2 . 1 What is the name of the effect that causes the wire **X** to move downwards?

[1 mark]

1 2 . 2 Suggest one change you could make to the apparatus in **Figure 20** that would increase the size of the force that wire **X** experiences.

[1 mark]

Figure 21 shows how a small weight placed on the insulating bar makes the wire **X** go back and balance in its original position.

Figure 21

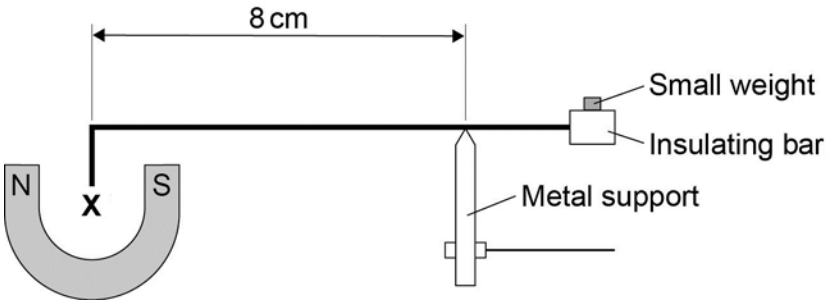

1 2 . 3 The wire **X** is 5 cm long and carries a current of 1.5 A.

The small weight causes a clockwise moment of 4.8×10^{-4} Nm.

Calculate the magnetic flux density where the wire **X** is positioned

Give the unit.

[6 marks]

Magnetic flux density = _____ Unit _____

END OF QUESTIONS

Copyright © 2016 AQA and its licensors. All rights reserved.