www.dynamicpapers.com

Write your name here

Surname	Other names

Centre Number | Candidate Number

Edexcel GCE

Physics

Advanced Subsidiary
Unit 2: Physics at Work

Monday 6 June 2011 – Afternoon
Time: 1 hour 30 minutes

Paper Reference
6PH02/01

You do not need any other materials.

Total Marks

Instructions

- Use **black** ink or ball-point pen.
- **Fill in the boxes** at the top of this page with your name, centre number and candidate number.
- Answer **all** questions.
- Answer the questions in the spaces provided
  – *there may be more space than you need.*

Information

- The total mark for this paper is 80.
- The marks for **each** question are shown in brackets
  – *use this as a guide as to how much time to spend on each question.*
- Questions labelled with an **asterisk** (*) are ones where the quality of your written communication will be assessed
  – *you should take particular care with your spelling, punctuation and grammar, as well as the clarity of expression, on these questions.*
- The list of data, formulae and relationships is printed at the end of this booklet.
- Candidates may use a scientific calculator.

Advice

- Read each question carefully before you start to answer it.
- Keep an eye on the time.
- Try to answer every question.
- Check your answers if you have time at the end.

Turn over ▶

P38415A

©2011 Edexcel Limited.

1/1/1/1/

P 3 8 4 1 5 A 0 1 2 8

edexcel
advancing learning, changing lives

www.dynamicpapers.com

SECTION A

Answer ALL questions.

For questions 1–10, in Section A, select one answer from A to D and put a cross in the box ☒. If you change your mind, put a line through the box ☒ and then mark your new answer with a cross ☒.

1 A laser beam is directed at the surface of a smooth, calm pond as shown in the diagram.

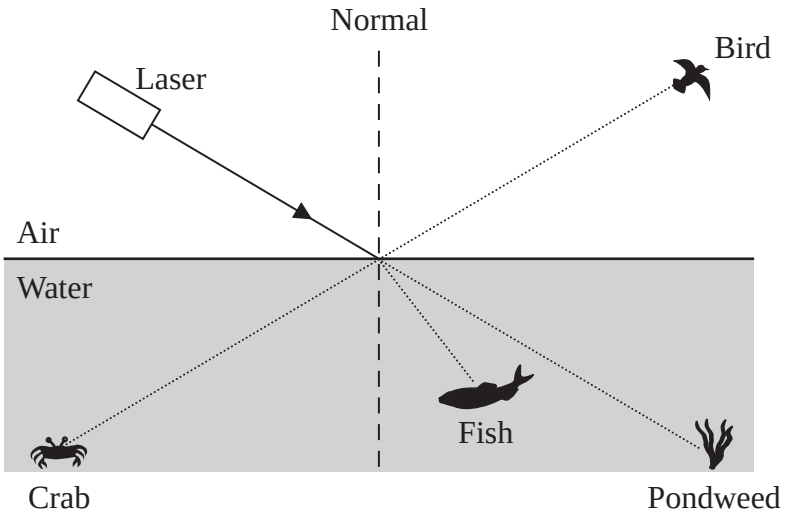

Which organisms could be illuminated by the laser light?

☒ **A** The bird and the fish.

☒ **B** The crab and the pondweed.

☒ **C** The bird and the pondweed.

☒ **D** The crab and the fish.

(Total for Question 1 = 1 mark)

www.dynamicpapers.com

2 A student wants to find the internal resistance of a cell. He plots a graph of the potential difference across the terminals of the cell against the current through the cell.

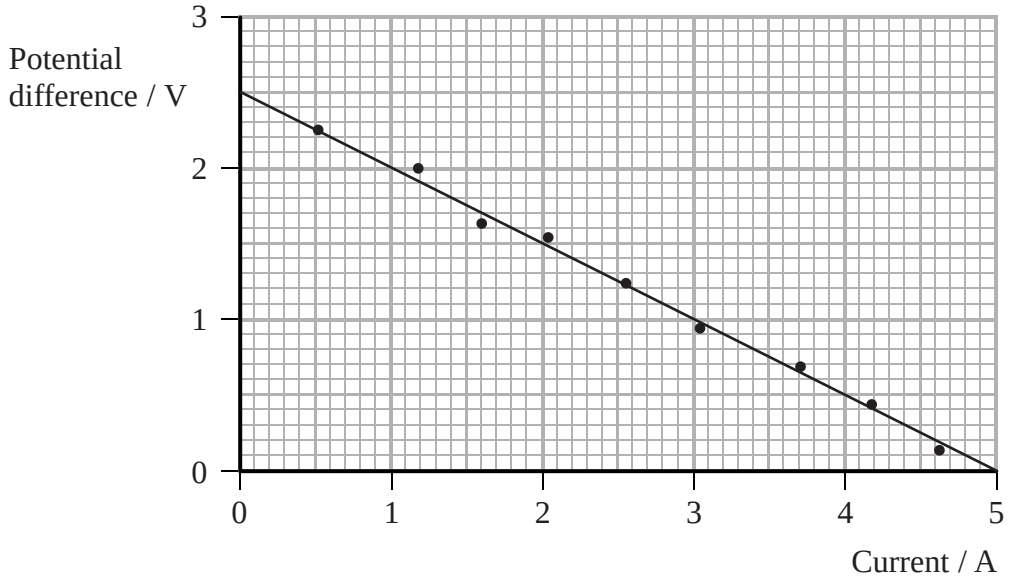

Which of the following quantities gives the internal resistance of the cell?

☒ **A** The area under the graph.

☒ **B** The intercept on the current axis.

☒ **C** The intercept on the potential difference axis.

☒ **D** The magnitude of the gradient.

(Total for Question 2 = 1 mark)

3 A longitudinal wave is moving along a spring. Two points on the spring are separated by half a wavelength. The displacements at these points on the spring are always

☒ **A** constant.

☒ **B** in the same direction as each other.

☒ **C** in opposite directions to each other.

☒ **D** in a direction at right angles to the direction of travel of the wave.

(Total for Question 3 = 1 mark)

www.dynamicpapers.com

4 Which of the following statements about infrared radiation and ultraviolet radiation is true?

☒ **A** An ultraviolet photon has more energy than an infrared photon.

☒ **B** Energy can be transferred by infrared radiation but not by ultraviolet radiation.

☒ **C** In a vacuum, infrared radiation travels faster than ultraviolet radiation.

☒ **D** Ultraviolet radiation has a longer wavelength than infrared radiation.

(Total for Question 4 = 1 mark)

---

5 A negative temperature coefficient thermistor is connected as shown in the circuit diagram.

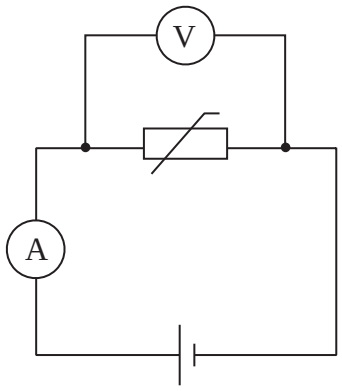

The cell has a negligible internal resistance. The effect of decreasing the temperature of the thermistor is that the

☒ **A** ammeter reading will decrease.

☒ **B** ammeter reading will increase.

☒ **C** voltmeter reading will decrease.

☒ **D** voltmeter reading will increase.

(Total for Question 5 = 1 mark)

---

www.dynamicpapers.com

6 The unit of potential difference is the volt. A correct alternative unit is

- ☒ **A** $J A^{-1} s^{-1}$
- ☒ **B** $J A s^{-1}$
- ☒ **C** $J A s$
- ☒ **D** $J A^{-1} s$

(Total for Question 6 = 1 mark)

7 The diagram represents shallow water waves of constant wavelength passing through two small openings in a barrier.

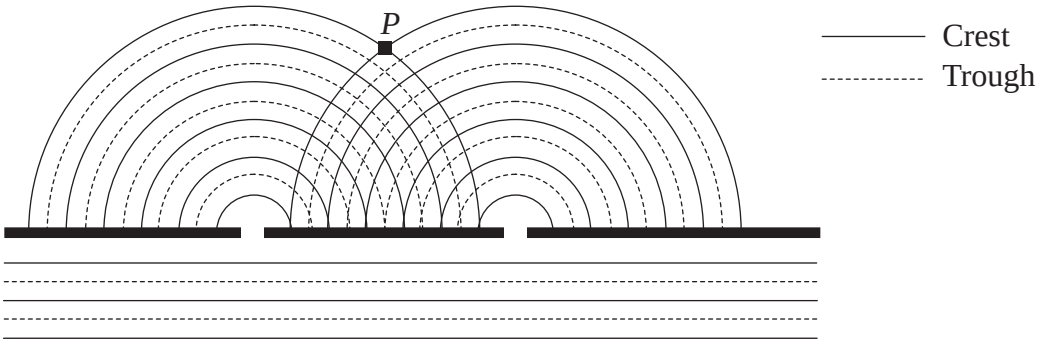

The statement which best describes the interference at point *P* is:

- ☒ **A** It is constructive and causes a longer wavelength.
- ☒ **B** It is constructive and causes an increase in amplitude.
- ☒ **C** It is destructive and causes a shorter wavelength.
- ☒ **D** It is destructive and causes a decrease in amplitude.

(Total for Question 7 = 1 mark)

8 A wave is diffracted as it passes through an opening in a barrier. The amount of diffraction that the wave undergoes depends on both the

- ☒ **A** amplitude and frequency of the incident wave.
- ☒ **B** wavelength and amplitude of the incident wave.
- ☒ **C** wavelength of the incident wave and the size of the opening.
- ☒ **D** amplitude of the incident wave and the size of the opening.

(Total for Question 8 = 1 mark)

www.dynamicpapers.com

9 Two wires of the same material are connected in series in the circuit shown.

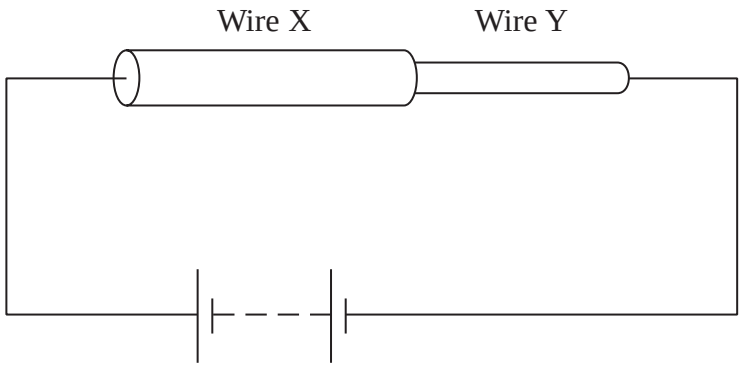

The cross-sectional area of wire X is twice the cross-sectional area of wire Y.

The drift velocities of the electrons in these two wires are v_X and v_Y.

The value of $\frac{v_X}{v_Y}$ is

☒ **A** ½

☒ **B** 1

☒ **C** 2

☒ **D** 4

(Total for Question 9 = 1 mark)

10 Which of the following provides evidence that light has a wave nature?

☒ **A** The emission of light from an energy-level transition in a hydrogen atom.

☒ **B** The diffraction of light passing through a narrow opening.

☒ **C** The absorption of ultra-violet radiation in the photoelectric effect.

☒ **D** The reflection of light from a mirror.

(Total for Question 10 = 1 mark)

TOTAL FOR SECTION A = 10 MARKS

www.dynamicpapers.com

SECTION B

Answer ALL questions in the spaces provided.

11 The photograph shows a marble statue. The statue is protected by a lightning conductor.



During a storm, a flash of lightning passes between a cloud and the lightning conductor. As a result a current of 15 000 A flows for a time of 3.0×10^{-2} s.

(a) Calculate the charge that flows in the lightning conductor during this time.

(2)

.....

.....

.....

.....

Charge = ...

www.dynamicpapers.com

(b) The lightning conductor is 1 m taller than the statue and is made from copper, which has a resistivity of 1.7×10^{-8} Ω m. The lightning conductor has a cross-sectional area of 1.5×10^{-4} m^2 and a resistance of 2.7×10^{-3} Ω.

Calculate the height of the statue and state an assumption that you have made.

(4)

.....

.....

.....

.....

Height of statue = ...

Assumption: .....

(c) Suggest why the lightning conductor is taller than the statue.

(1)

.....

.....

.....

(Total for Question 11 = 7 marks)

www.dynamicpapers.com

12 The diagram shows the lowest three energy levels of a hydrogen atom.

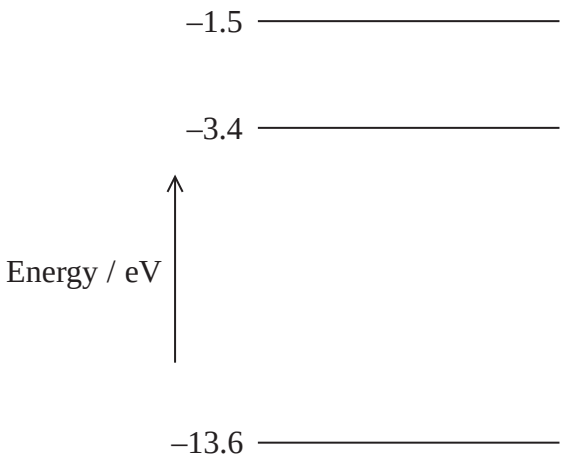

(a) Excited hydrogen atoms can emit light of wavelength 6.56×10^{-7} m.

(i) Calculate the frequency of this light.

(2)

.....

.....

.....

Frequency = ...

(ii) The energy of a photon of this frequency is 3.03×10^{-19} J.
By means of a calculation determine which electron transition emits this photon.

(2)

.....

.....

.....

from ..... to .....

www.dynamicpapers.com

(b) The spectrum of light from the Sun has a dark line at a wavelength of 656 nm. In the spectrum of light received from a distant galaxy, the corresponding line appears at a wavelength of 690 nm.

Explain what the observation tells us about this galaxy. Do not include calculations in your answer.

(2)

.....

.....

.....

.....

.....

(Total for Question 12 = 6 marks)

www.dynamicpapers.com

13 Mobile phones have a rechargeable battery which is recharged by means of a mains adaptor. One such adaptor has an input power of 4.8 W at a voltage of 230 V.

(a) Calculate the input current to the adaptor when it is in use.

(2)

.....

.....

Input current = ...

(b) The adaptor's output is labelled as 5 V 0.1 A 0.5 V A

(i) Show that the unit V A is equivalent to the watt.

(1)

.....

.....

.....

.....

(ii) Calculate the efficiency of the adaptor.

(2)

.....

.....

.....

Efficiency = ...

(iii) Suggest a reason why the efficiency is less than 100%.

(1)

.....

.....

.....

.....

(Total for Question 13 = 6 marks)

www.dynamicpapers.com

14 (a) Describe the difference between a transverse wave and a longitudinal wave.

(2)

.....

.....

.....

.....

(b) A teacher sets up the following demonstration to show that the speed of sound in an aluminium rod is greater than in air.

An aluminium rod MN of length 1.2 m is suspended horizontally by two wires as shown in the diagram.

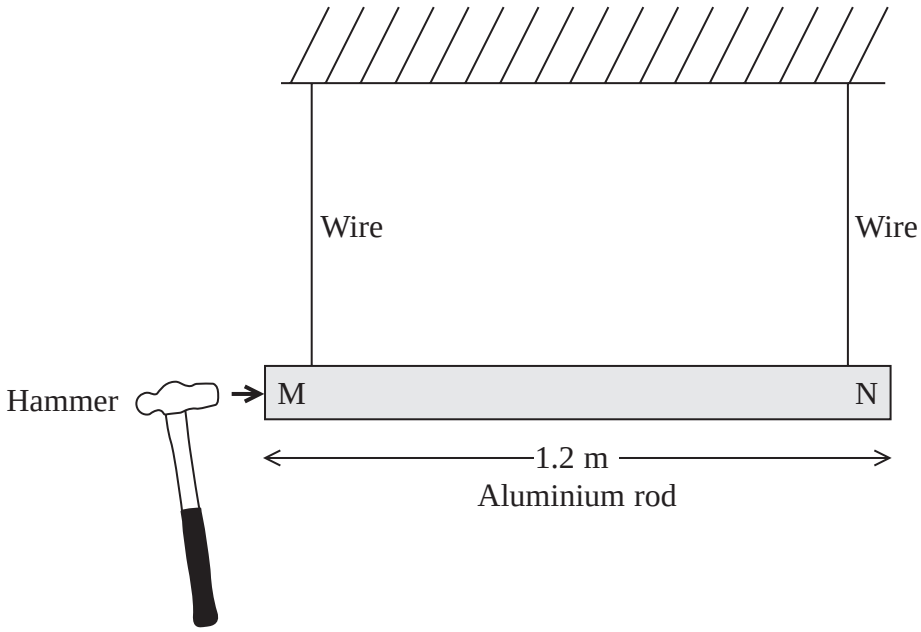

A wave pulse is made to travel along the rod and reflect from end N. The wave pulse is produced by hitting end M gently with a hammer so that the hammer remains in contact with end M until the reflected pulse returns.

(i) State and explain whether the wave pulse is transverse or longitudinal.

(2)

.....

.....

.....

.....

www.dynamicpapers.com

(ii) The hammer remains in contact with end M for a time of 4.8×10^{-4} s.

Calculate the speed of the wave pulse in the rod.

(3)

Speed in rod = ...

(iii) When the rod is hit, a sound is heard.

Suggest how this sound is created.

(1)

(c) A standing wave is set up in the rod.

Explain how a standing wave is formed.

(3)

(Total for Question 14 = 11 marks)

www.dynamicpapers.com

15 (a) The diagram shows the circuit used to investigate how the current varies with potential difference for an electrical component P. The circuit contains an ammeter and a voltmeter.

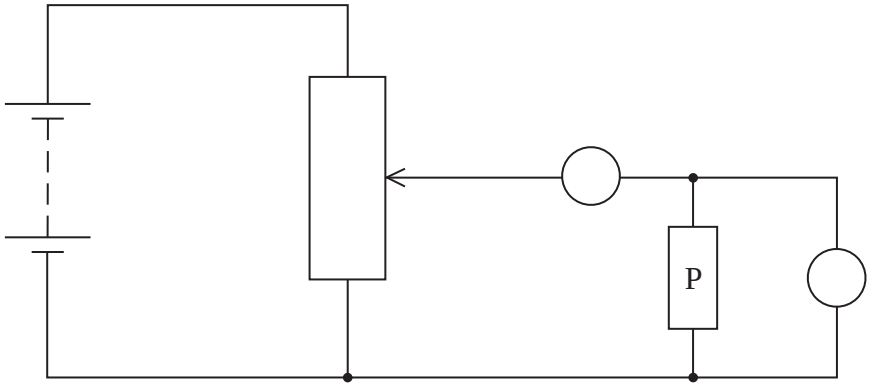

(i) On the diagram, label the ammeter A and the voltmeter V.

(1)

(ii) The position of the contact of the potential divider is moved so that the reading on the voltmeter becomes zero. Label this position Z.

(1)

www.dynamicpapers.com

(b) The graph shows how the current *I* varies with potential difference *V* for two electrical components P and Q.

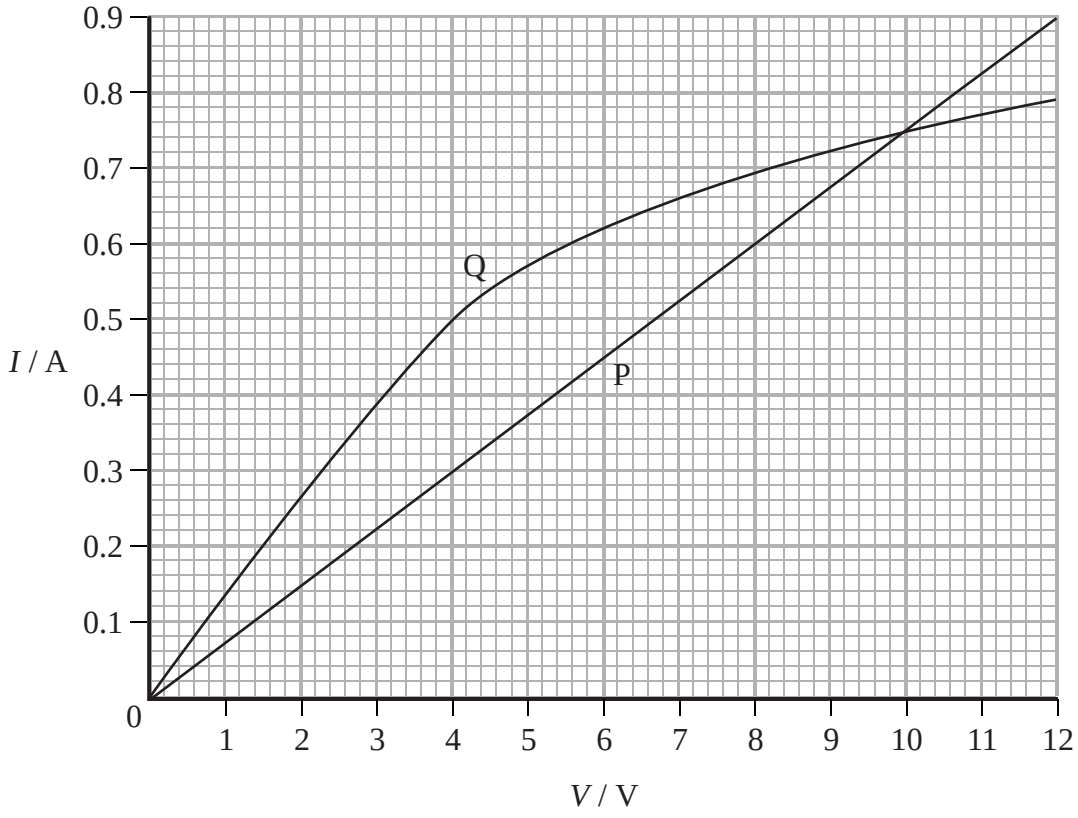

(i) State the value of the current for which the resistance of P is the same as the resistance of Q and determine this value of resistance.

(3)

Current = ...

.....

.....

Resistance = ...

*(ii) Component Q is a filament lamp. Explain the shape of its graph.

(3)

.....

.....

.....

.....

.....

.....

www.dynamicpapers.com

(c) A potential divider consisting of component P and a resistor R is connected to a 12 V supply. The lamp Q and a voltmeter are connected to the circuit as shown.

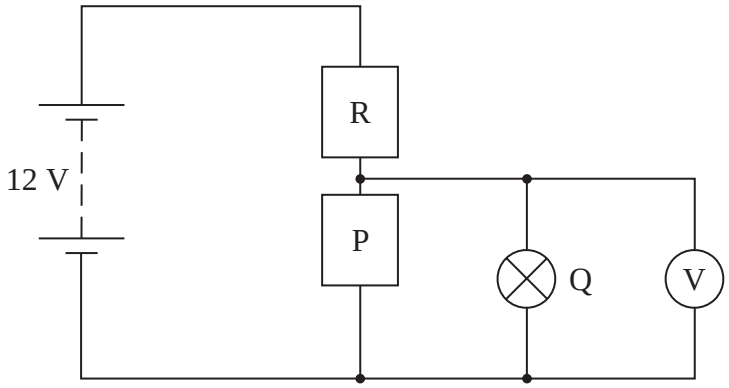

The supply has a negligible internal resistance. The reading on the voltmeter is 4.0 V.

(i) Use the graph in part (b) to determine the current in the resistor R.

(2)

Current = ...

(ii) Calculate the resistance of the resistor R.

(2)

Resistance = ...

www.dynamicpapers.com

(iii) The lamp Q is removed.

Explain, without further calculation, how the voltmeter reading would change.

(3)

.....

.....

.....

.....

.....

.....

(Total for Question 15 = 15 marks)

www.dynamicpapers.com

16 (a) Refractometers are used in the food manufacturing industry to measure the concentration of sugar in different drinks. As the concentration of sugar increases, the refractive index of the liquid also increases. A simple refractometer uses a hollow prism shape that can be filled with different liquids.

(i) The simplified diagram below shows a ray of light passing through a prism filled with a liquid.

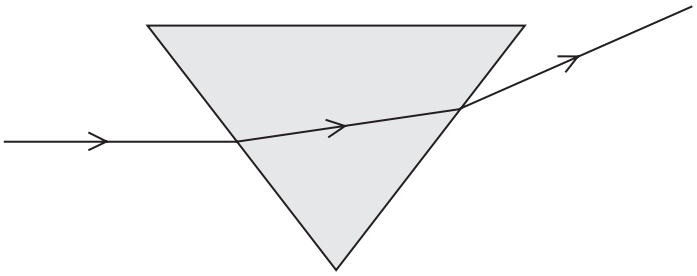

The liquid is replaced with one of a higher sugar concentration.

Using the same incident ray, draw the new path through the liquid and out of the prism.

(2)

(ii) In practice, a laser beam is shone through the empty prism. The position of the emergent ray is marked on a screen. The prism is filled with a liquid of a known sugar concentration and the displacement on the screen is recorded.

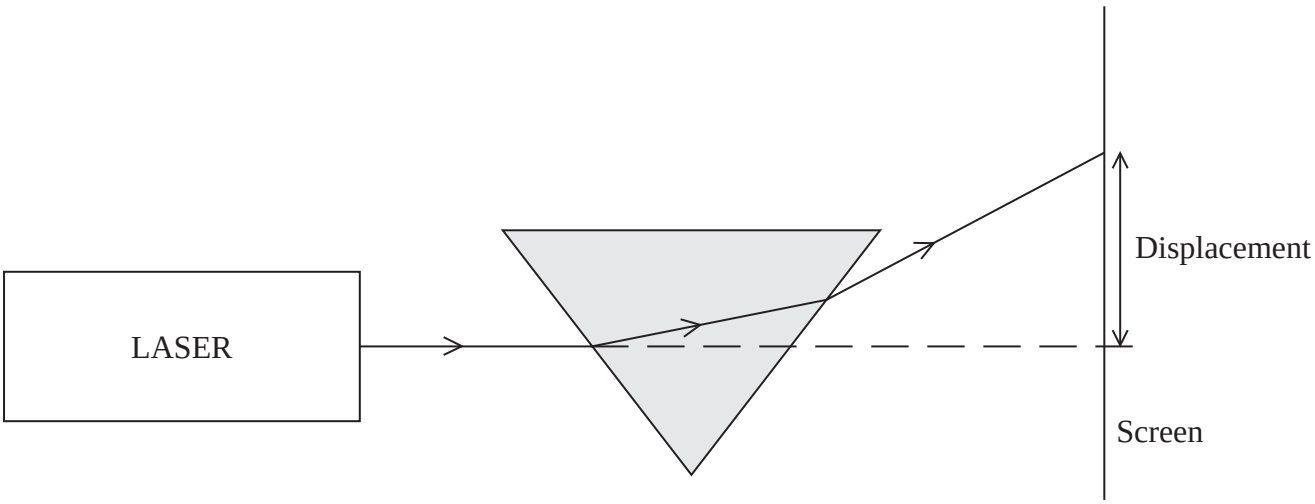

www.dynamicpapers.com

This is repeated for a number of different known concentrations.

The graph shows how the displacement varies with the sugar concentration.

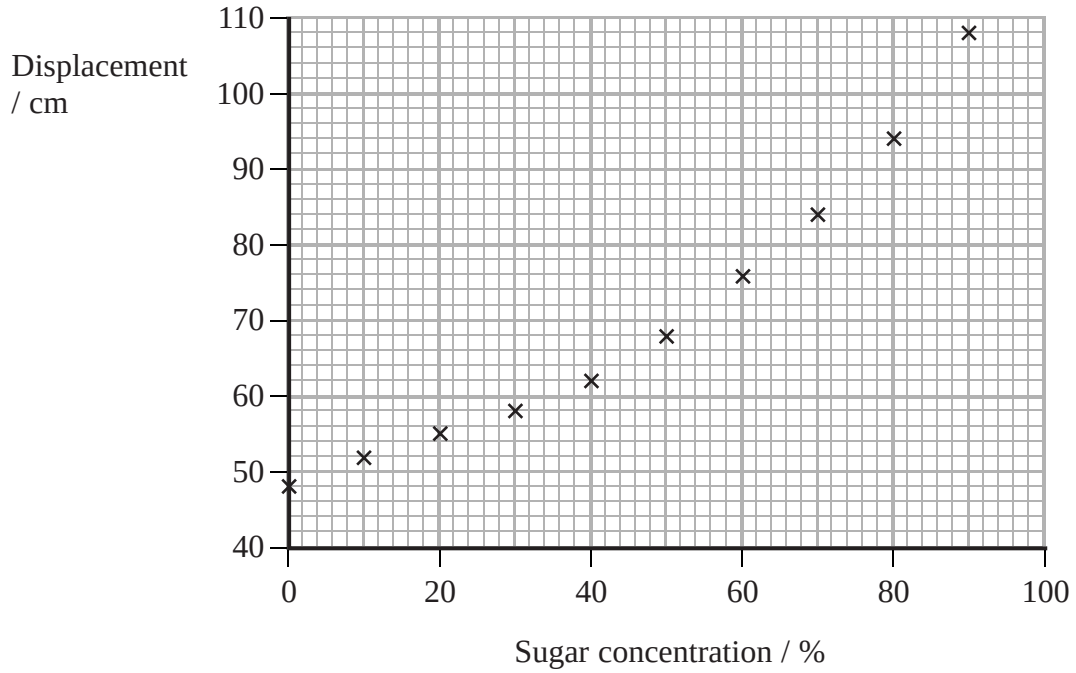

Describe how the displacement varies with sugar concentration.

(2)

.....

.....

.....

.....

(iii) A sample of unknown concentration produced a displacement of 88 cm.

Draw the line of best fit on the graph and use it to find the sugar concentration of the sample.

(2)

Concentration = ...

www.dynamicpapers.com

(iv) Give a reason why the distance between the screen and the prism must be kept constant.

(1)

(b) Another method of measuring sugar concentrations uses polarised light.

(i) Explain what is meant by polarised light.

(2)

*(ii) When polarised light passes through a sugar solution, the plane of polarisation rotates through an angle.

Explain how to measure this angle of rotation.

(4)

(Total for Question 16 = 13 marks)

www.dynamicpapers.com

17* (a) In a demonstration, ultraviolet light is incident on a zinc plate and electrons are emitted.

The intensity of the ultraviolet light is increased.

Explain the following observations:

- the number of electrons emitted per second increases
- the maximum kinetic energy of an electron does not change.

(4)

(b) The table shows the work functions of four metals.

Metal	Work function / 10^{-19} J
Aluminium	6.53
Caesium	3.36
Potassium	2.30
Zinc	6.88

(i) Determine which of these metals would emit electrons when illuminated with visible light of frequency 5.88×10^{14} Hz.

(3)

www.dynamicpapers.com

(ii) The graphs show how the maximum kinetic energy of the emitted electrons varies with the frequency of incident light for the four metals.

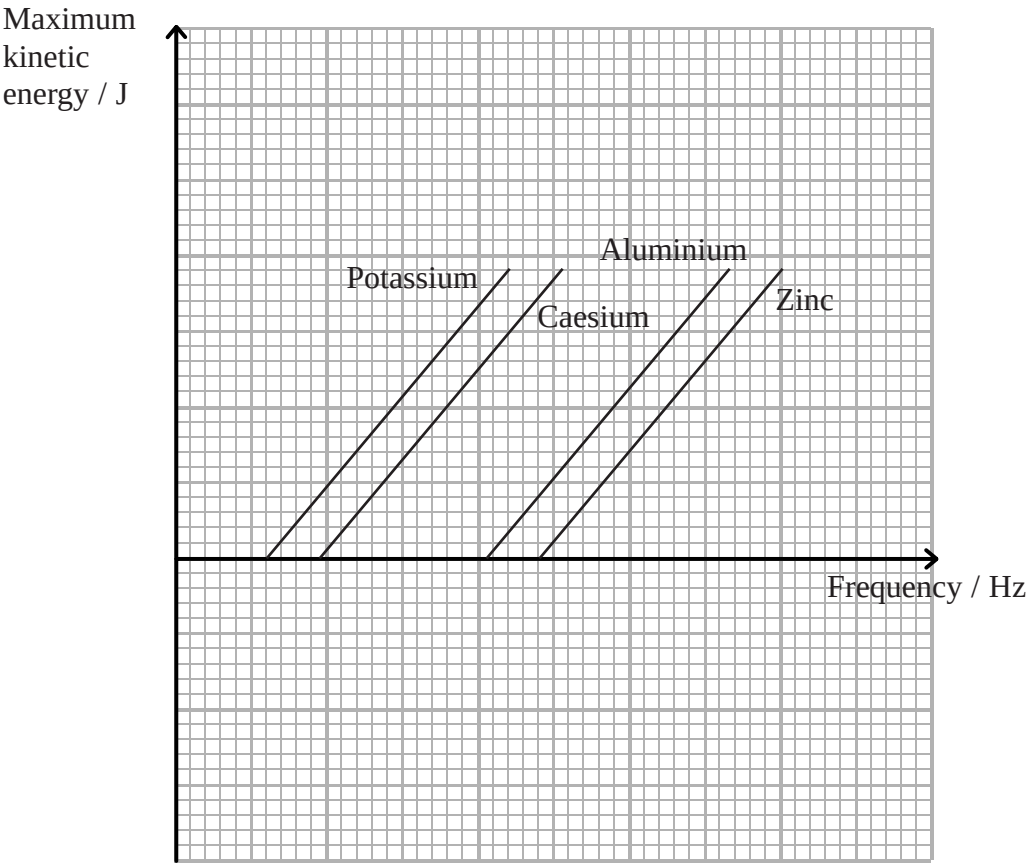

Use the relationship $hf = ½ mv^2 + \varphi$ to explain the relative positions of the graphs and why they are all parallel.

(3)

www.dynamicpapers.com

(iii) A school laboratory has a photoelectric cell for student use. The metal plate in the photoelectric cell is made of caesium and it can be used with a set of filters to obtain a graph similar to the one in (ii).

Explain why the metal plate is made of caesium rather than zinc.

(2)

.....

.....

.....

.....

(Total for Question 17 = 12 marks)

TOTAL FOR SECTION B = 70 MARKS

TOTAL FOR PAPER = 80 MARKS

www.dynamicpapers.com

List of data, formulae and relationships

Acceleration of free fall	$g = 9.81\ \text{m s}^{-2}$	(close to Earth's surface)
Electron charge	$e = -1.60 \times 10^{-19}\ \text{C}$	
Electron mass	$m_e = 9.11 \times 10^{-31}\ \text{kg}$	
Electronvolt	$1\ \text{eV} = 1.60 \times 10^{-19}\ \text{J}$	
Gravitational field strength	$g = 9.81\ \text{N kg}^{-1}$	(close to Earth's surface)
Planck constant	$h = 6.63 \times 10^{-34}\ \text{J s}$	
Speed of light in a vacuum	$c = 3.00 \times 10^{8}\ \text{m s}^{-1}$	

Unit 1

Mechanics

Kinematic equations of motion

$v = u + at$
$s = ut + \frac{1}{2}at^2$
$v^2 = u^2 + 2as$

Forces

$\Sigma F = ma$
$g = F/m$
$W = mg$

Work and energy

$\Delta W = F\Delta s$
$E_k = \frac{1}{2}mv^2$
$\Delta E_{grav} = mg\Delta h$

Materials

Stokes' law $F = 6\pi\eta rv$

Hooke's law $F = k\Delta x$

Density $\rho = m/V$

Pressure $p = F/A$

Young modulus $E = \sigma/\varepsilon$ where
Stress $\sigma = F/A$
Strain $\varepsilon = \Delta x/x$

Elastic strain energy $E_{el} = \frac{1}{2}F\Delta x$

www.dynamicpapers.com

Unit 2

Waves

Wave speed	$v = f\lambda$
Refractive index	${}_1\mu_2 = \sin i / \sin r = v_1/v_2$

Electricity

Potential difference	$V = W/Q$
Resistance	$R = V/I$
Electrical power, energy and efficiency	$P = VI$ $P = I^2R$ $P = V^2/R$ $W = VIt$

$$\% \text{ efficiency} = \frac{\text{useful energy output}}{\text{energy input}} \times 100$$

$$\% \text{ efficiency} = \frac{\text{useful power output}}{\text{power input}} \times 100$$

Resistivity	$R = \rho l/A$
Current	$I = \Delta Q/\Delta t$ $I = nqvA$
Resistors in series	$R = R_1 + R_2 + R_3$
Resistors in parallel	$\frac{1}{R} = \frac{1}{R_1} + \frac{1}{R_2} + \frac{1}{R_3}$

Quantum physics

Photon model	$E = hf$
Einstein's photoelectric equation	$hf = \phi + \frac{1}{2}mv^2_{max}$