www.dynamicpapers.com

Pearson Edexcel International Advanced Level

Decision Mathematics D1

Advanced/Advanced Subsidiary

Tuesday 20 January 2015 – Morning
Time: 1 hour 30 minutes

Paper Reference
WDM01/01

You must have:
D1 Answer Book

Candidates may use any calculator allowed by the regulations of the Joint Council for Qualifications. Calculators must not have the facility for symbolic algebra manipulation, differentiation and integration, or have retrievable mathematical formulae stored in them.

Instructions

- Use **black** ink or ball-point pen.
- If pencil is used for diagrams/sketches/graphs it must be dark (HB or B). Coloured pencils and highlighter pens must not be used.
- **Fill in the boxes** on the top of the answer book with your name, centre number and candidate number.
- Answer **all** questions and ensure that your answers to parts of questions are clearly labelled.
- Answer the questions in the D1 answer book provided – *there may be more space than you need*.
- You should show sufficient working to make your methods clear. Answers without working may not gain full credit.
- When a calculator is used, the answer should be given to an appropriate degree of accuracy.
- Do not return the question paper with the answer book.

Information

- The total mark for this paper is 75.
- The marks for **each** question are shown in brackets – *use this as a guide as to how much time to spend on each question.*

Advice

- Read each question carefully before you start to answer it.
- Try to answer every question.
- Check your answers if you have time at the end.

P45059A

©2015 Pearson Education Ltd.

5/5/1/1/1/

P 4 5 0 5 9 A

Turn over

PEARSON

www.dynamicpapers.com

Write your answers in the D1 answer book for this paper.

1.

	A	B	C	D	E	F	G	H
A	-	9	8	13	17	11	12	10
B	9	-	11	21	15	24	13	7
C	8	11	-	20	23	17	17	15
D	13	21	20	-	15	28	11	18
E	17	15	23	15	-	31	23	30
F	11	24	17	28	31	-	13	15
G	12	13	17	11	23	13	-	23
H	10	7	15	18	30	15	23	-

The table represents a network that shows the time taken, in minutes, to travel by car between eight villages, A, B, C, D, E, F, G and H.

(a) Use Prim's algorithm, starting at A, to find a minimum spanning tree for this network. You must list the **arcs** that form your tree in the order in which you select them.

(3)

(b) Draw your minimum spanning tree using the vertices given in Diagram 1 in the answer book and state the weight of the tree.

(2)

(c) State whether your minimum spanning tree is unique. Justify your answer.

(1)

(Total 6 marks)

www.dynamicpapers.com

2.

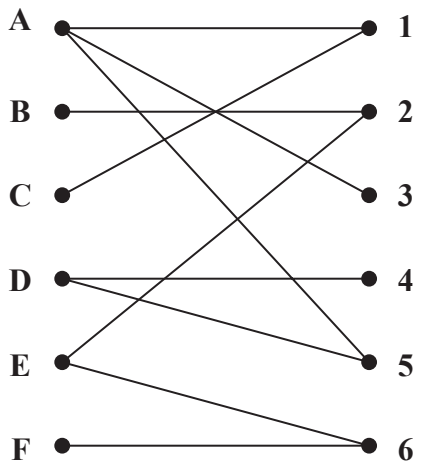

Figure 1

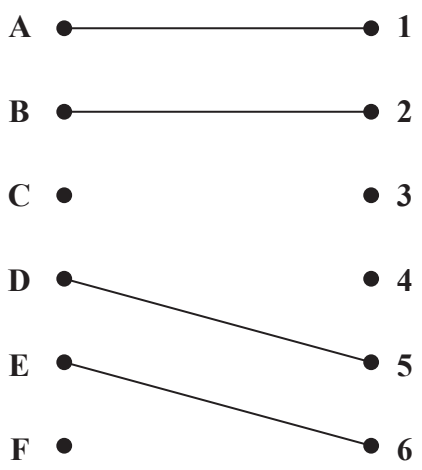

Figure 2

Figure 1 shows the possible allocations of six workers, Amrit (A), Bernard (B), Cameron (C), David (D), Emily (E) and Francis (F), to six tasks, 1, 2, 3, 4, 5 and 6

(a) Explain why it is not possible to find a complete matching.

(1)

Figure 2 shows an initial matching. Starting from this initial matching,

(b) find the two alternating paths that start at C.

(2)

(c) List the two improved matchings generated by using the two alternating paths found in (b).

(2)

After training, task 5 is added to Bernard's possible allocation.

Starting from either of the two improved matchings found in (c),

(d) use the maximum matching algorithm to obtain a complete matching. You must list the additional alternating path that you use, and state the complete matching.

(3)

(Total 8 marks)

www.dynamicpapers.com

3.

1.1 0.7 1.9 0.9 2.1 0.2 2.3 0.4 0.5 1.7

(a) Use the first-fit bin packing algorithm to determine how the numbers listed above can be packed into bins of size 3

(3)

The list is to be sorted into **descending** order.

(b) (i) Starting at the left-hand end of the list, perform **one** pass through the list using a bubble sort. Write down the list that results at the end of your first pass.

(ii) Write down the number of comparisons and the number of swaps performed during your first pass.

(4)

After a second pass using this bubble sort, the updated list is

1.9 1.1 2.1 0.9 2.3 0.7 0.5 1.7 0.4 0.2

(c) Use a **quick sort** on this updated list to obtain the fully sorted list. You must make your pivots clear.

(4)

(d) Apply the first-fit decreasing bin packing algorithm to your fully sorted list to pack the numbers into bins of size 3

(3)

(Total 14 marks)

www.dynamicpapers.com

4.

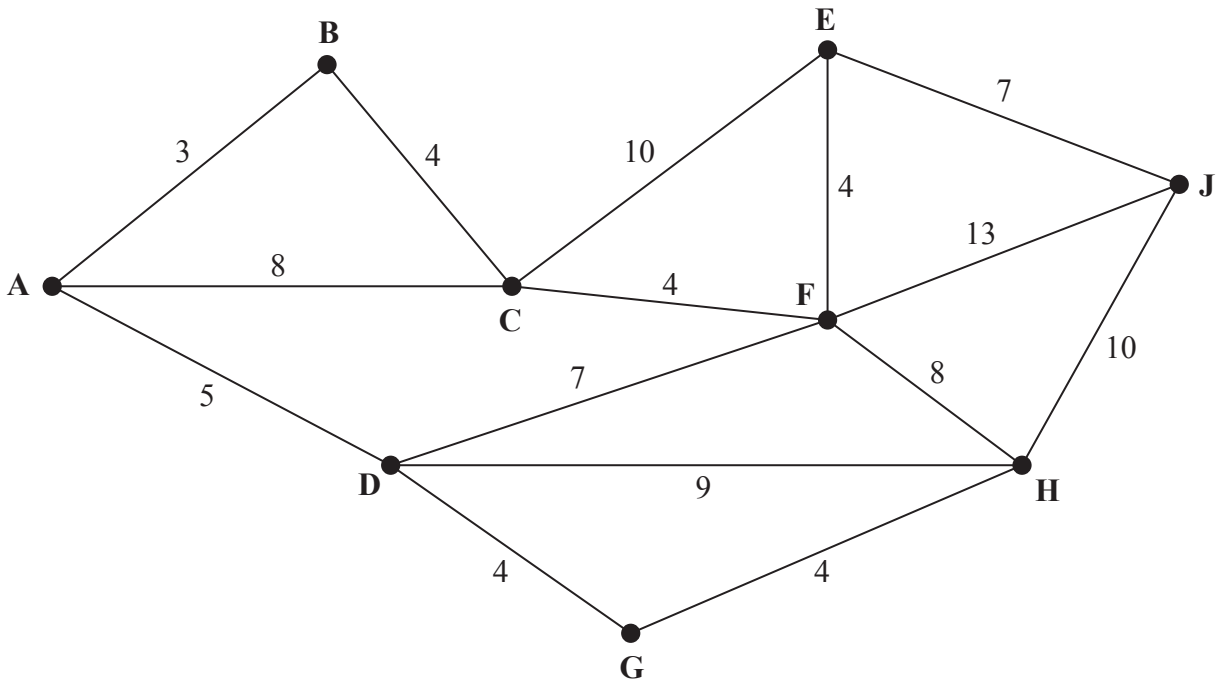

Figure 3

[*The total weight of the network is 100*]

Figure 3 represents a network of pipes in a building. The number on each arc represents the length, in metres, of the corresponding pipe.

(a) Use Dijkstra's algorithm to find the shortest path from A to J. State your path and its length.

(6)

On a particular day Kim needs to check each pipe. A route of minimum length, which traverses each pipe at least once and starts and finishes at A, needs to be found.

(b) Use an appropriate algorithm to find the arcs that will need to be traversed twice. You must make your method and working clear.

(5)

(c) Write down a possible route, giving its length.

(2)

All the pipes directly attached to B are removed. Kim needs to check all the remaining pipes and may now start at any vertex and finish at any vertex. A route is required that excludes all those pipes directly attached to B.

(d) State all possible combinations of starting and finishing points so that the length of Kim's route is minimised. State the length of Kim's route.

(3)

(Total 16 marks)

www.dynamicpapers.com

5.

Activity	Immediately preceding activities
A	-
B	-
C	A
D	A
E	A, B
F	C
G	C, D
H	E
I	E
J	H, I
K	F, G

(a) Draw the activity network described in the precedence table, using activity on arc. Your activity network must contain only the minimum number of dummies.

(5)

(b) Explain why, in general, dummies may be required in an activity network.

(2)

(Total 7 marks)

www.dynamicpapers.com

6. Jonathan is going to make hats to sell at a fete. He can make red hats and green hats. Jonathan can use linear programming to determine the number of each colour of hat that he should make.

Let x be the number of red hats he makes and y be the number of green hats he makes.

One of the constraints is that there must be at least 30 hats.

(a) Write down an inequality, in terms of x and y, to model this constraint.

(1)

Two further constraints are

$$2y + x \geqslant 40$$

$$2y - x \geqslant -30$$

(b) Write down two more constraints which apply.

(1)

(c) Represent all these constraints on Diagram 1 in the answer book. Hence determine, and label, the feasible region R.

(4)

The cost of making a green hat is three times the cost of making a red hat. Jonathan wishes to minimise the total cost.

(d) Use the objective line (ruler) method to determine the number of red hats and number of green hats that Jonathan should make. You must clearly draw and label your objective line.

(3)

Given that the minimum total cost of making the hats is £107.50

(e) determine the cost of making one green hat and the cost of making one red hat. You must make your method clear.

(3)

(Total 12 marks)

www.dynamicpapers.com

7.

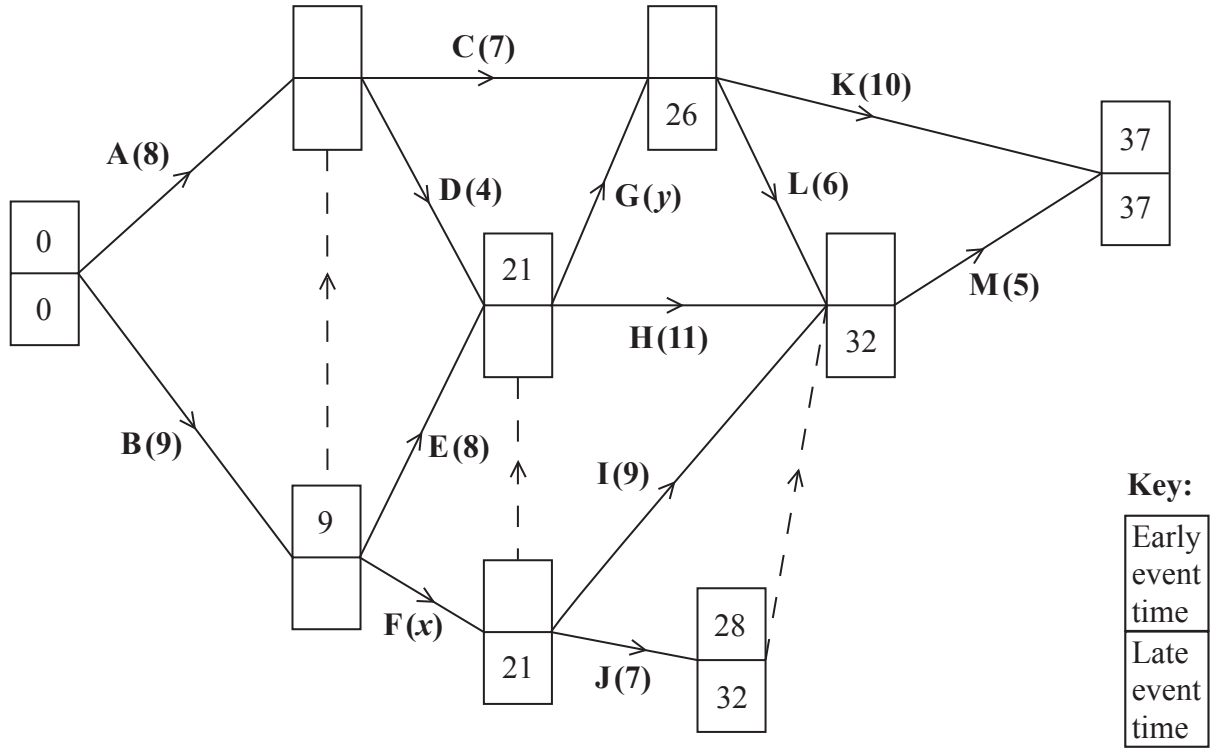

Figure 4

[*The sum of all the activity durations is 99 days*]

The network in Figure 4 shows the activities that need to be undertaken to complete a project. Each activity is represented by an arc and the duration of the activity, in days, is shown in brackets. The early event times and late event times are to be shown at each vertex and some have been completed for you.

Given that activity F is a critical activity and that the total float on activity G is 2 days,

(a) write down the value of x and the value of y,

(2)

(b) calculate the missing early event times and late event times and hence complete Diagram 1 in your answer book.

(3)

Each activity requires one worker and the project must be completed in the shortest possible time.

(c) Calculate a lower bound for the number of workers needed to complete the project in the shortest possible time.

(1)

(d) Draw a cascade (Gantt) chart for this project on Grid 1 in the answer book.

(4)

(e) Use your cascade chart to determine the minimum number of workers needed to complete the project in the shortest possible time. You must make specific reference to times and activities. (You do **not** need to provide a schedule of the activities.)

(2)

(Total 12 marks)

TOTAL FOR PAPER: 75 MARKS

END

www.dynamicpapers.com

Write your name here

Surname	Other names

Pearson Edexcel
International
Advanced Level

Centre Number | | | | | |

Candidate Number | | | | |

Decision Mathematics D1

Advanced/Advanced Subsidiary

Tuesday 20 January 2015 – Morning
Time: 1 hour 30 minutes

Paper Reference
WDM01/01

Answer Book
Do not return the question paper with the answer book.

Total Marks

Turn over ▶

P45059A

©2015 Pearson Education Ltd.

5/5/1/1/1/

P 4 5 0 5 9 A 0 1 2 0

PEARSON

www.dynamicpapers.com

Leave blank

1. (a)

	A	B	C	D	E	F	G	H
A	-	9	8	13	17	11	12	10
B	9	-	11	21	15	24	13	7
C	8	11	-	20	23	17	17	15
D	13	21	20	-	15	28	11	18
E	17	15	23	15	-	31	23	30
F	11	24	17	28	31	-	13	15
G	12	13	17	11	23	13	-	23
H	10	7	15	18	30	15	23	-

www.dynamicpapers.com

Leave blank

Question 1 continued

(b)

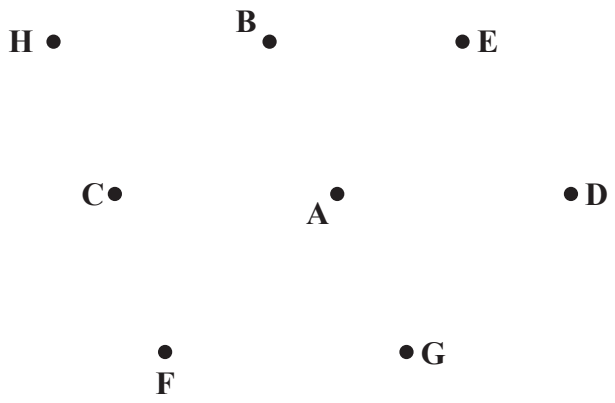

Diagram 1

Q1

(Total 6 marks)

www.dynamicpapers.com

Leave blank

2.

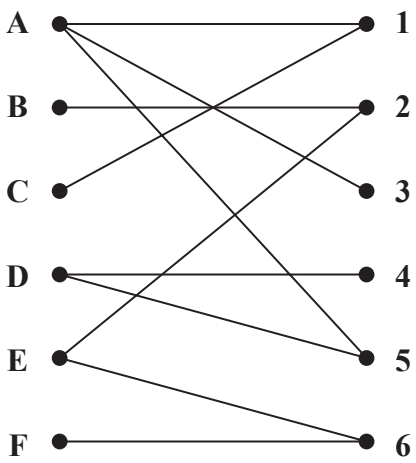

Figure 1

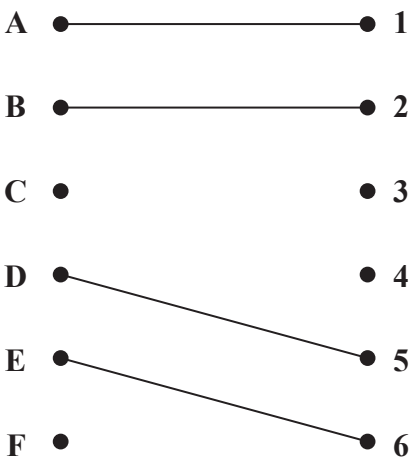

Figure 2

www.dynamicpapers.com

Leave blank

Question 2 continued

A ●	● **1**	**A** ●	● **1**
B ●	● **2**	**B** ●	● **2**
C ●	● **3**	**C** ●	● **3**
D ●	● **4**	**D** ●	● **4**
E ●	● **5**	**E** ●	● **5**
F ●	● **6**	**F** ●	● **6**

Q2

(Total 8 marks)

www.dynamicpapers.com

Leave blank

3.

1.1 0.7 1.9 0.9 2.1 0.2 2.3 0.4 0.5 1.7

www.dynamicpapers.com

Leave blank

Question 3 continued

www.dynamicpapers.com

Leave blank

Question 3 continued

www.dynamicpapers.com

Leave blank

Question 3 continued

Q3

(Total 14 marks)

4. (a)

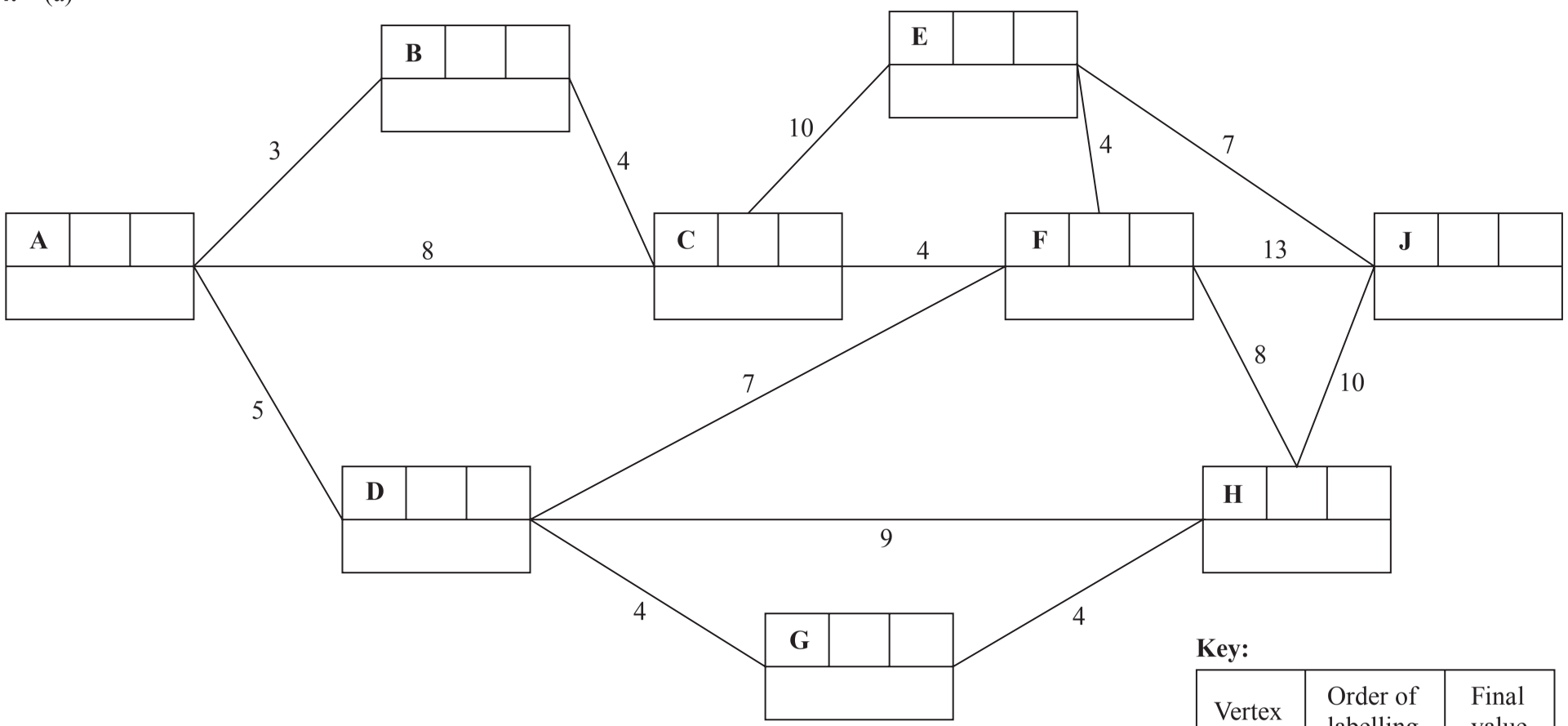

Shortest path _____

Length of shortest path _____

Leave blank

www.dynamicpapers.com

www.dynamicpapers.com

Leave blank

Question 4 continued

www.dynamicpapers.com

Leave blank

Question 4 continued

www.dynamicpapers.com

Leave blank

Question 4 continued

Q4

(Total 16 marks)

www.dynamicpapers.com

Leave blank

5. (a)

www.dynamicpapers.com

Leave blank

Question 5 continued

(b)

Q5

(Total 7 marks)

www.dynamicpapers.com

Leave blank

6.

www.dynamicpapers.com

Leave blank

Question 6 continued

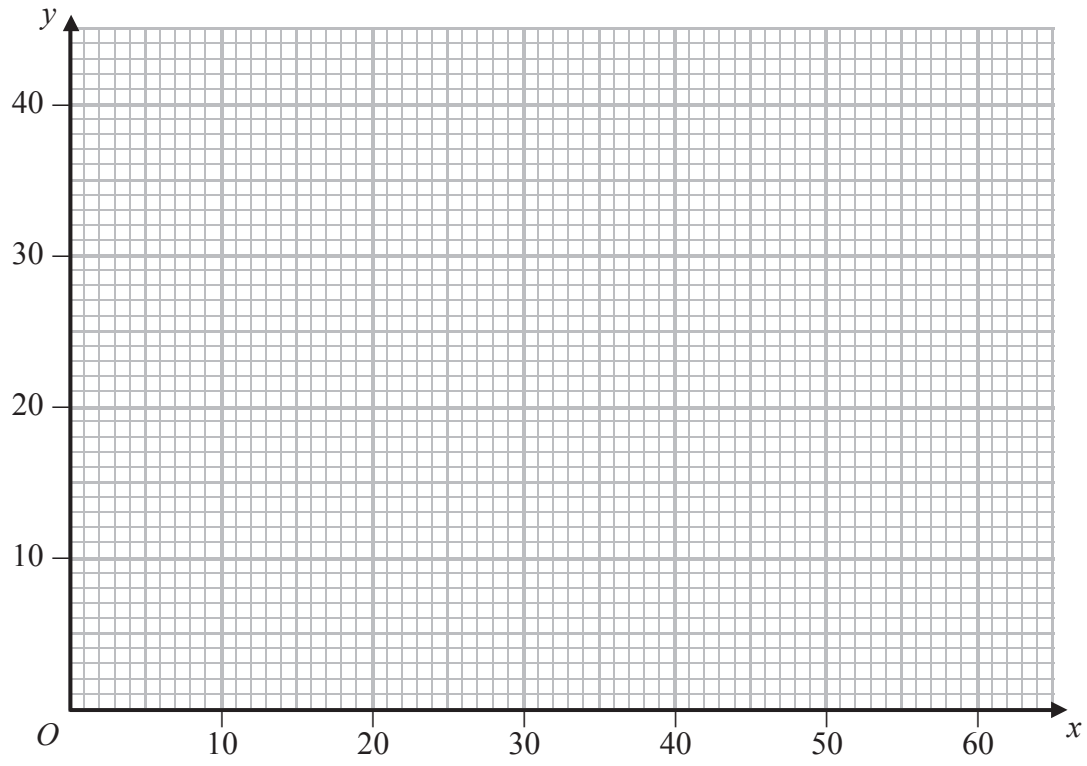

Diagram 1

Q6

(Total 12 marks)

www.dynamicpapers.com

Leave blank

7. (a)

(b)

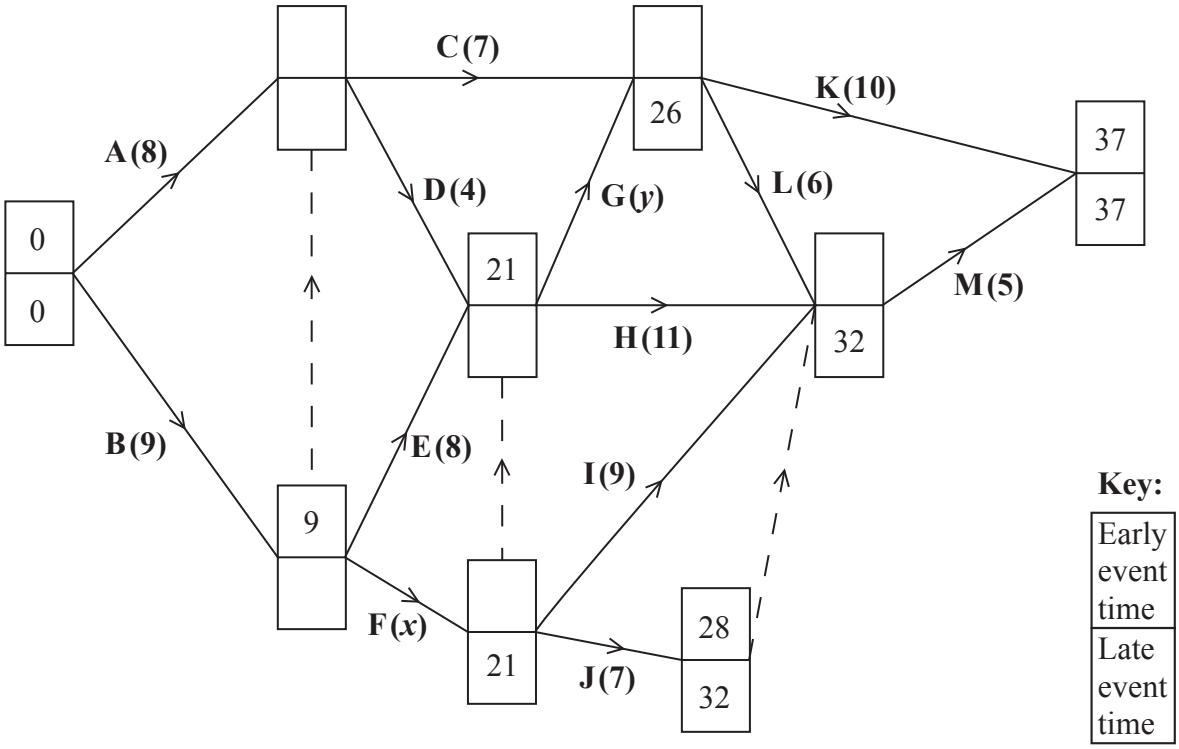

Diagram 1

www.dynamicpapers.com

Leave blank

Question 7 continued

(c)

(d)

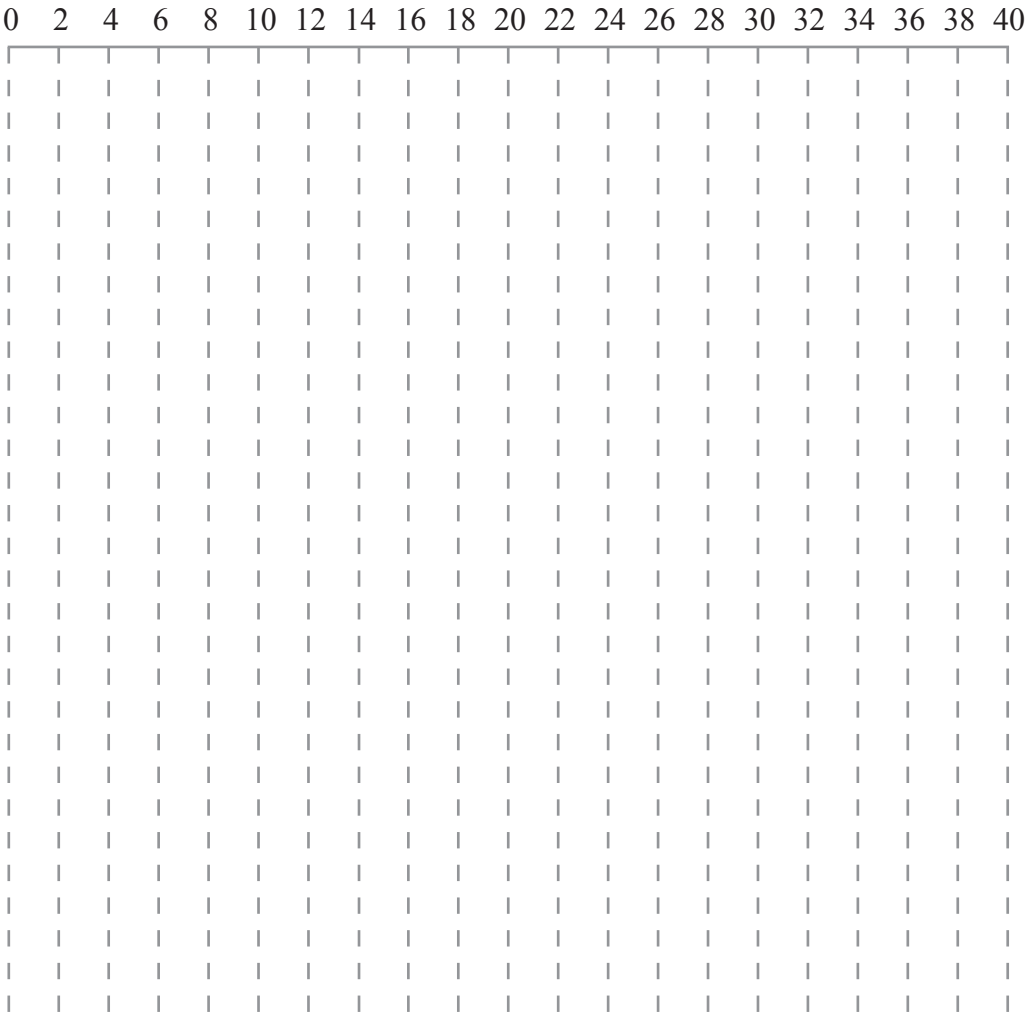

Grid 1

(e)

Q7

(Total 12 marks)

TOTAL FOR PAPER: 75 MARKS

END

www.dynamicpapers.com

BLANK PAGE