* 0000800000001 * DFD
www.dynamicpapers.com

Cambridge Assessment International Education

# Cambridge International AS & A Level

CANDIDATE NAME

CENTRE NUMBER

CANDIDATE NUMBER

*2029271027*

**PHYSICS** **9702/38**

Paper 3 Advanced Practical Skills 2 **October/November 2025**

**2 hours**

You must answer on the question paper.

You will need: The materials and apparatus listed in the confidential instructions

**INSTRUCTIONS**

- Answer **all** questions.
- Use a black or dark blue pen. You may use an HB pencil for any diagrams or graphs.
- Write your name, centre number and candidate number in the boxes at the top of the page.
- Write your answer to each question in the space provided.
- Do **not** use an erasable pen or correction fluid.
- Do **not** write on any bar codes.
- You will be allowed to work with the apparatus for a maximum of 1 hour for each question.
- You should record all your observations in the spaces provided in the question paper as soon as these observations are made.
- You may use a calculator.
- You should show all your working and use appropriate units.

**INFORMATION**

- The total mark for this paper is 40.
- The number of marks for each question or part question is shown in brackets [ ].

| For Examiner's Use | |
|---|---|
| 1 | |
| 2 | |
| Total | |

This document has **12** pages. Any blank pages are indicated.


© UCLES 2025

[Turn over

www.dynamicpapers.com


**You may not need to use all of the materials provided.**

**1** In this experiment, you will investigate the phase difference between the oscillations of two mass–spring systems.

**(a)** • Assemble the apparatus as shown in Fig. 1.1.

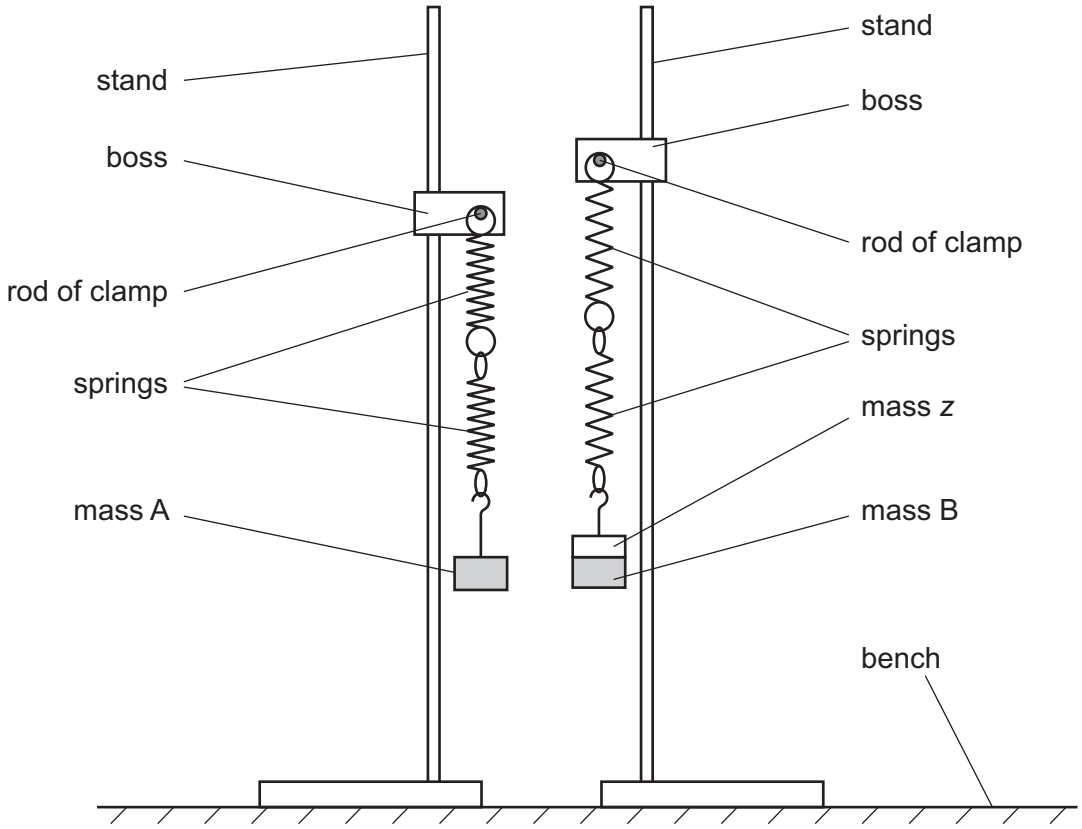


**Fig. 1.1**

- Mass A and mass B are each 200 g.
- Add a mass *z* of 40 g to mass B.

  Record the value of *z*.

  *z* = ..... g

- *M* is given by *M* = 200 g + *z*.

  Calculate *M*.

  *M* = ..... g

DO NOT WRITE IN THIS MARGIN
DO NOT WRITE IN THIS MARGIN
DO NOT WRITE IN THIS MARGIN
DO NOT WRITE IN THIS MARGIN
DO NOT WRITE IN THIS MARGIN

© UCLES 2025

DO NOT WRITE IN THIS MARGIN
DO NOT WRITE IN THIS MARGIN
DO NOT WRITE IN THIS MARGIN
DO NOT WRITE IN THIS MARGIN
DO NOT WRITE IN THIS MARGIN

- Pull both A and B down a short distance and release them together. Observe the oscillations. A and B initially oscillate in phase (both moving up and down together), then their oscillations go out of phase and then become in phase again.

- The time from A and B oscillating in phase to the next time they oscillate in phase is *P*.

  Measure and record *P*.

*P* = .....
[2]

www.dynamicpapers.com


**(b)** Change $z$ and determine $P$. Repeat until you have six sets of values of $z$ and $P$.

Record your results in a table. Include values of $M$, $\frac{1}{\sqrt{M}}$ and $\frac{1}{P}$ in your table.

[10]

**(c) (i)** Plot a graph of $\frac{1}{P}$ on the $y$-axis against $\frac{1}{\sqrt{M}}$ on the $x$-axis. [3]

**(ii)** Draw the straight line of best fit. [1]

**(iii)** Determine the gradient and $y$-intercept of this line.

gradient = .....

$y$-intercept = .....

[2]

DO NOT WRITE IN THIS MARGIN
DO NOT WRITE IN THIS MARGIN
DO NOT WRITE IN THIS MARGIN
DO NOT WRITE IN THIS MARGIN

© UCLES 2025

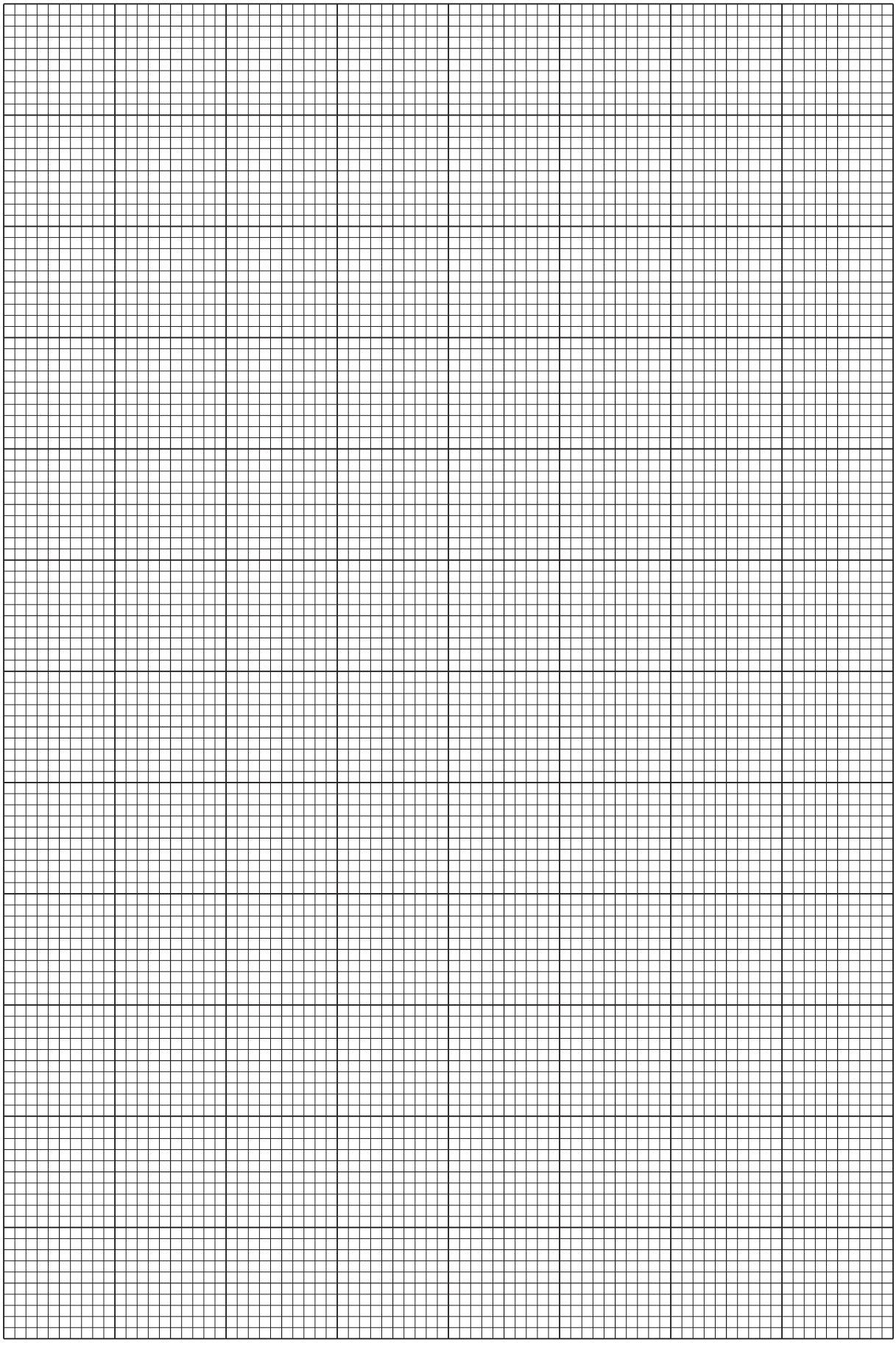

DO NOT WRITE IN THIS MARGIN
DO NOT WRITE IN THIS MARGIN
DO NOT WRITE IN THIS MARGIN
DO NOT WRITE IN THIS MARGIN
DO NOT WRITE IN THIS MARGIN

www.dynamicpapers.com


**(d)** It is suggested that the quantities $P$ and $M$ are related by the equation

$$\frac{1}{P} = \frac{a}{\sqrt{M}} + b$$

where $a$ and $b$ are constants.

Use your answers in **(c)(iii)** to determine the values of $a$ and $b$.
Give appropriate units.

$a$ = .....

$b$ = .....
[2]

[Total: 20]

DO NOT WRITE IN THIS MARGIN
DO NOT WRITE IN THIS MARGIN
DO NOT WRITE IN THIS MARGIN
DO NOT WRITE IN THIS MARGIN
DO NOT WRITE IN THIS MARGIN

www.dynamicpapers.com


**You may not need to use all of the materials provided.**

**2** In this experiment, you will investigate the tension in a string.

**(a)** • Set up the apparatus as shown in Fig. 2.1.

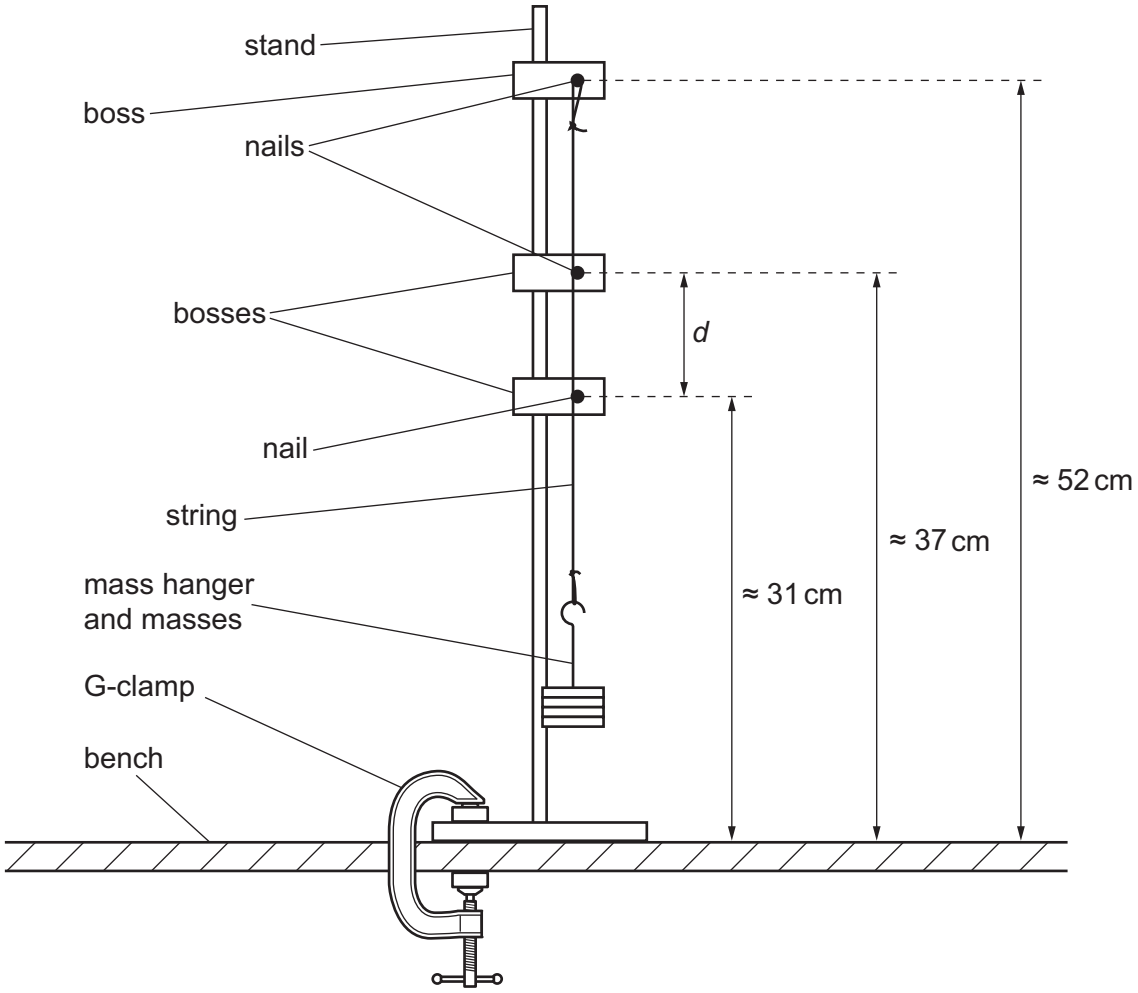


**Fig. 2.1**

- The mass hanger and masses should have a total mass *M* of 0.400 kg.
- The distance between the two lower nails is *d*, as shown in Fig. 2.1.

  Measure and record *d*.

*d* = ..... cm [1]

DO NOT WRITE IN THIS MARGIN
DO NOT WRITE IN THIS MARGIN
DO NOT WRITE IN THIS MARGIN
DO NOT WRITE IN THIS MARGIN
DO NOT WRITE IN THIS MARGIN

www.dynamicpapers.com


**(b)** The tension in the string is $T$.

Calculate $T$ using $T = Mg$, where $g = 9.81\,\text{N kg}^{-1}$.

$T$ = ..... N [1]

**(c) (i)** • Hook the newton meter on the string half-way between the two lower nails and pull it horizontally with a force $F$ of 5.0 N, as shown in Fig. 2.2.

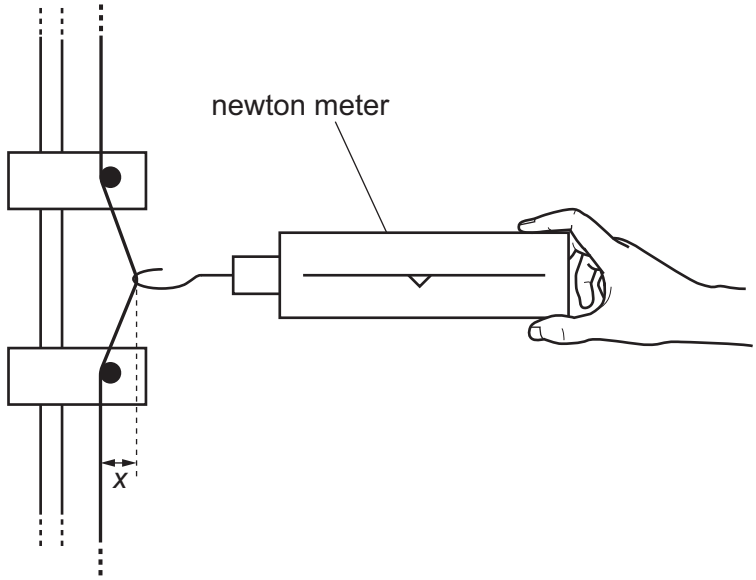


**Fig. 2.2**

• The force $F$ causes the string to deflect a distance $x$, as shown in Fig. 2.2.

Measure and record $x$.

$x$ = ..... cm [2]

**(ii)** Estimate the percentage uncertainty in your value of $x$. Show your working.

percentage uncertainty = .....% [1]

© UCLES 2025


DO NOT WRITE IN THIS MARGIN
DO NOT WRITE IN THIS MARGIN
DO NOT WRITE IN THIS MARGIN
DO NOT WRITE IN THIS MARGIN
DO NOT WRITE IN THIS MARGIN

www.dynamicpapers.com


**(iii)** Calculate $y$, where

$$y = \sqrt{\left(x^2 + \frac{d^2}{4}\right)}.$$

$y$ = ..... cm [1]

**(d)** • Add slotted masses to the mass hanger so that the total mass $M$ is 0.700 kg.

• Repeat **(b)**, **(c)(i)** and **(c)(iii)**.

$T$ = ..... N

$x$ = ..... cm

$y$ = ..... cm
[3]

DO NOT WRITE IN THIS MARGIN
DO NOT WRITE IN THIS MARGIN
DO NOT WRITE IN THIS MARGIN
DO NOT WRITE IN THIS MARGIN
DO NOT WRITE IN THIS MARGIN

www.dynamicpapers.com


**(e)** It is suggested that the relationship between $y$, $T$ and $x$ is

$$ky = Tx$$

where $k$ is a constant.

**(i)** Using your data, calculate **two** values of $k$.

first value of $k$ = .....

second value of $k$ = .....
[1]

**(ii)** Justify the number of significant figures that you have given for your values of $k$.

.....

.....

..... [1]

**(f)** It is suggested that the percentage uncertainty in the values of $k$ is 20%.

Using this uncertainty, explain whether your results support the relationship in **(e)**.

.....

.....

.....

..... [1]

DO NOT WRITE IN THIS MARGIN
DO NOT WRITE IN THIS MARGIN
DO NOT WRITE IN THIS MARGIN
DO NOT WRITE IN THIS MARGIN
DO NOT WRITE IN THIS MARGIN

www.dynamicpapers.com


**(g) (i)** Describe **four** sources of uncertainty or limitations of the procedure for this experiment.

For any uncertainties in measurement that you describe, you should state the quantity being measured and a reason for the uncertainty.

1 .....

.....

2 .....

.....

3 .....

.....

4 .....

.....

[4]

**(ii)** Describe **four** improvements that could be made to this experiment. You may suggest the use of other apparatus or different procedures.

1 .....

.....

2 .....

.....

3 .....

.....

4 .....

.....

[4]

[Total: 20]

DO NOT WRITE IN THIS MARGIN
DO NOT WRITE IN THIS MARGIN
DO NOT WRITE IN THIS MARGIN
DO NOT WRITE IN THIS MARGIN
DO NOT WRITE IN THIS MARGIN

www.dynamicpapers.com



**BLANK PAGE**

DO NOT WRITE IN THIS MARGIN
DO NOT WRITE IN THIS MARGIN
DO NOT WRITE IN THIS MARGIN
DO NOT WRITE IN THIS MARGIN
DO NOT WRITE IN THIS MARGIN

Permission to reproduce items where third-party owned material protected by copyright is included has been sought and cleared where possible. Every reasonable effort has been made by the publisher (UCLES) to trace copyright holders, but if any items requiring clearance have unwittingly been included, the publisher will be pleased to make amends at the earliest possible opportunity.

To avoid the issue of disclosure of answer-related information to candidates, all copyright acknowledgements are reproduced online in the Cambridge Assessment International Education Copyright Acknowledgements Booklet. This is produced for each series of examinations and is freely available to download at www.cambridgeinternational.org after the live examination series.

Cambridge Assessment International Education is part of Cambridge Assessment. Cambridge Assessment is the brand name of the University of Cambridge Local Examinations Syndicate (UCLES), which is a department of the University of Cambridge.

© UCLES 2025