* 0000800000001 * DFD
www.dynamicpapers.com

Cambridge Assessment International Education

Cambridge International AS & A Level

CANDIDATE NAME

CENTRE NUMBER

CANDIDATE NUMBER

7116167306 1

PHYSICS **9702/35**

Paper 3 Advanced Practical Skills 1 **October/November 2025**

2 hours

You must answer on the question paper.

You will need: The materials and apparatus listed in the confidential instructions

INSTRUCTIONS

- Answer **all** questions.
- Use a black or dark blue pen. You may use an HB pencil for any diagrams or graphs.
- Write your name, centre number and candidate number in the boxes at the top of the page.
- Write your answer to each question in the space provided.
- Do **not** use an erasable pen or correction fluid.
- Do **not** write on any bar codes.
- You will be allowed to work with the apparatus for a maximum of 1 hour for each question.
- You should record all your observations in the spaces provided in the question paper as soon as these observations are made.
- You may use a calculator.
- You should show all your working and use appropriate units.

INFORMATION

- The total mark for this paper is 40.
- The number of marks for each question or part question is shown in brackets [ ].

For Examiner's Use	
1	
2	
Total	

This document has **16** pages. Any blank pages are indicated.

© UCLES 2025

[Turn over

www.dynamicpapers.com

You may not need to use all of the materials provided.

1 In this experiment, you will investigate the equilibrium of a wooden rod.

Some of the apparatus has been set up for you.

(a) (i) • Fig. 1.1 shows the rod with two eyes.

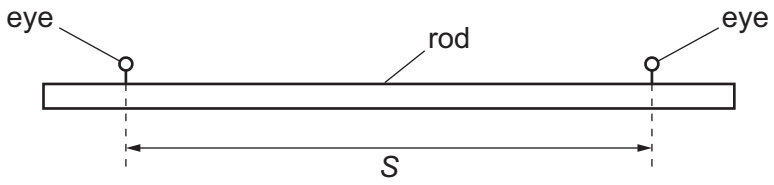

Fig. 1.1

The distance between the two eyes on the rod is *S*.

Measure and record *S*.

S = ...

• Complete the set-up of the apparatus as shown in Fig. 1.2.

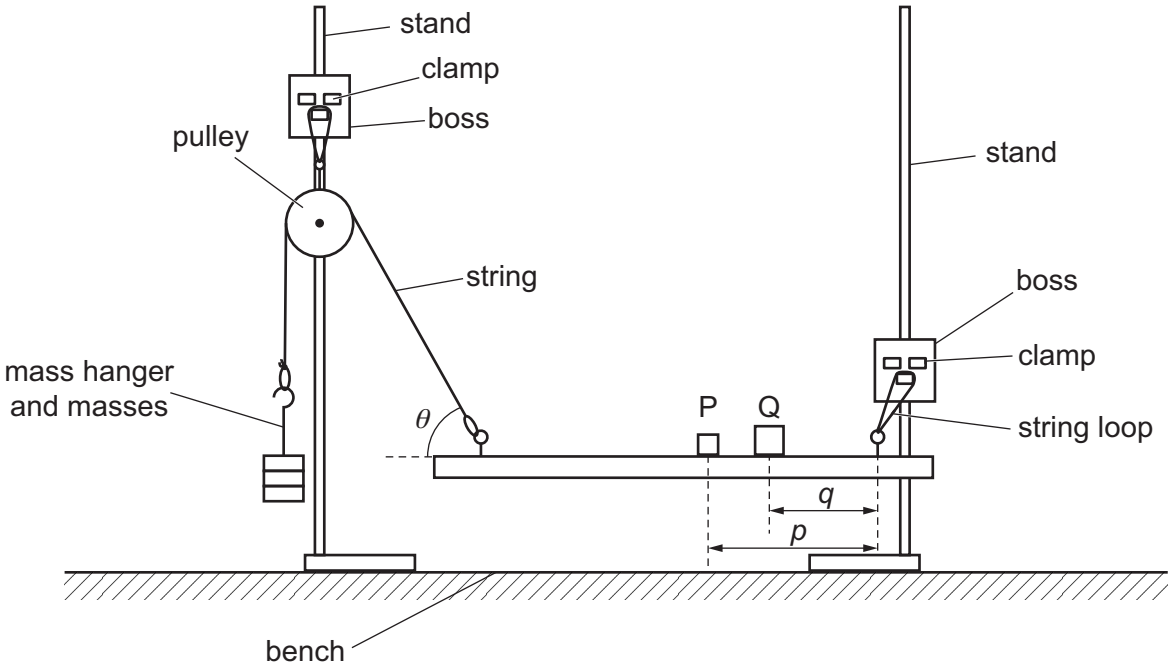

Fig. 1.2

DO NOT WRITE IN THIS MARGIN
DO NOT WRITE IN THIS MARGIN
DO NOT WRITE IN THIS MARGIN
DO NOT WRITE IN THIS MARGIN
DO NOT WRITE IN THIS MARGIN

© UCLES 2025

DO NOT WRITE IN THIS MARGIN
DO NOT WRITE IN THIS MARGIN
DO NOT WRITE IN THIS MARGIN
DO NOT WRITE IN THIS MARGIN
DO NOT WRITE IN THIS MARGIN

- P and Q are masses.

  The distance between the centre of mass P and the centre of the right-hand eye is p, as shown in Fig. 1.2.

  The distance between the centre of mass Q and the centre of the right-hand eye is q, as shown in Fig. 1.2.

  The angle between the string and the rod is θ.

  Use some of the adhesive putty to attach Q to the rod so that q is approximately 26 cm.

- Use some of the adhesive putty to attach P to the rod. Adjust the position of P and the position of the stand with the pulley so that the rod is parallel to the bench and θ is approximately 45°.

  Do not move the stands for the remainder of the experiment.

- Measure and record θ, p and q.

θ = ... °

p = ...

q = ...

[2]

(ii) The moment of the force about the eye due to mass P is T_P.

The moment of the force about the eye due to mass Q is T_Q.

The values of T_P and T_Q are given by:

$$T_P = 5Wp \quad \text{and} \quad T_Q = 7Wq$$

where W has the value 0.0981 N.

Calculate T_P and T_Q.

T_P = ...

T_Q = ...

[1]

www.dynamicpapers.com

(b) Change the position of Q and adjust the position of P until the rod is again parallel to the bench. Measure p and q. Repeat until you have six sets of values of p and q.

Record your results in a table. Include values of T_P and T_Q in your table.

[8]

(c) **(i)** Plot a graph of T_Q on the y-axis against T_P on the x-axis. [3]

(ii) Draw the straight line of best fit. [1]

(iii) Determine the gradient and y-intercept of this line.

gradient = ...

y-intercept = ...
[2]

DO NOT WRITE IN THIS MARGIN
DO NOT WRITE IN THIS MARGIN
DO NOT WRITE IN THIS MARGIN
DO NOT WRITE IN THIS MARGIN

www.dynamicpapers.com

DO NOT WRITE IN THIS MARGIN
DO NOT WRITE IN THIS MARGIN
DO NOT WRITE IN THIS MARGIN
DO NOT WRITE IN THIS MARGIN
DO NOT WRITE IN THIS MARGIN

© UCLES 2025

[Turn over

www.dynamicpapers.com

(d) (i) It is suggested that the quantities T_Q and T_P are related by the equation

$$T_Q = A + BT_P$$

where A and B are constants.

Using your answers in **(c)(iii)**, determine the values of A and B.
Give appropriate units.

A = ...

B = ...
[2]

(ii) Theory suggests that

$$R = F \sin\theta - \frac{2A}{S}$$

where R is the weight of the rod and F has the value 2.94 N.

Use your answers in **(a)(i)** and **(d)(i)** to determine a value for R.
Give an appropriate unit.

R = ... [1]

[Total: 20]

DO NOT WRITE IN THIS MARGIN
DO NOT WRITE IN THIS MARGIN
DO NOT WRITE IN THIS MARGIN
DO NOT WRITE IN THIS MARGIN
DO NOT WRITE IN THIS MARGIN

www.dynamicpapers.com

BLANK PAGE

DO NOT WRITE IN THIS MARGIN
DO NOT WRITE IN THIS MARGIN
DO NOT WRITE IN THIS MARGIN
DO NOT WRITE IN THIS MARGIN
DO NOT WRITE IN THIS MARGIN

www.dynamicpapers.com

You may not need to use all of the materials provided.

2 In this experiment, you will investigate the rolling of a plastic bottle.

(a) (i) You are provided with a plastic bottle with a cap, as shown in Fig. 2.1.

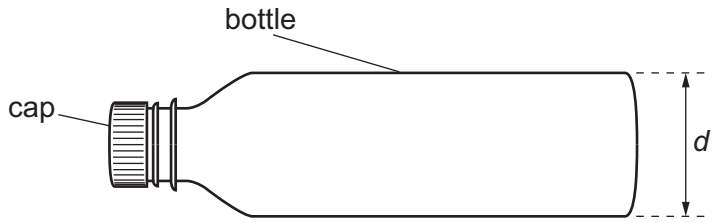

Fig. 2.1

The diameter of the base of the bottle is *d*.

Measure and record *d*.

d = ... [1]

(ii) Estimate the percentage uncertainty in your value of *d*. Show your working.

percentage uncertainty = ... % [1]

(b) • Set up the apparatus as shown in Fig. 2.2.

SIDE VIEW

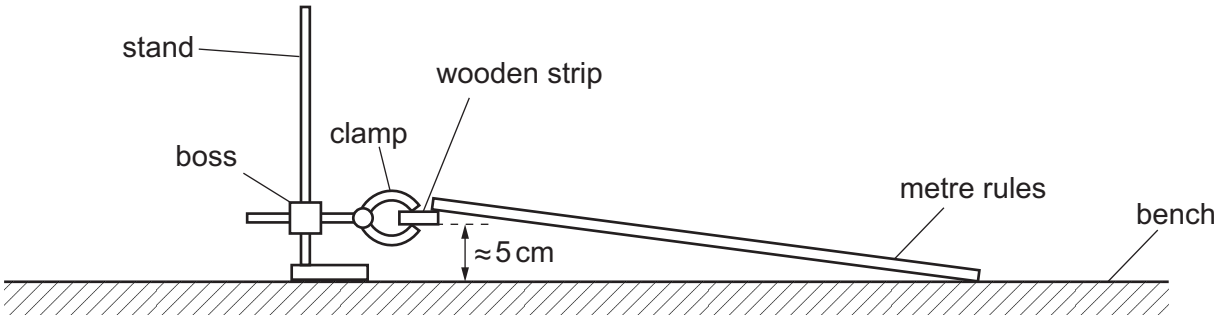

Fig. 2.2

DO NOT WRITE IN THIS MARGIN
DO NOT WRITE IN THIS MARGIN
DO NOT WRITE IN THIS MARGIN
DO NOT WRITE IN THIS MARGIN
DO NOT WRITE IN THIS MARGIN

DO NOT WRITE IN THIS MARGIN
DO NOT WRITE IN THIS MARGIN
DO NOT WRITE IN THIS MARGIN
DO NOT WRITE IN THIS MARGIN
DO NOT WRITE IN THIS MARGIN

- Adjust the two metre rules so that the rules are approximately parallel to each other, as shown in Fig. 2.3.

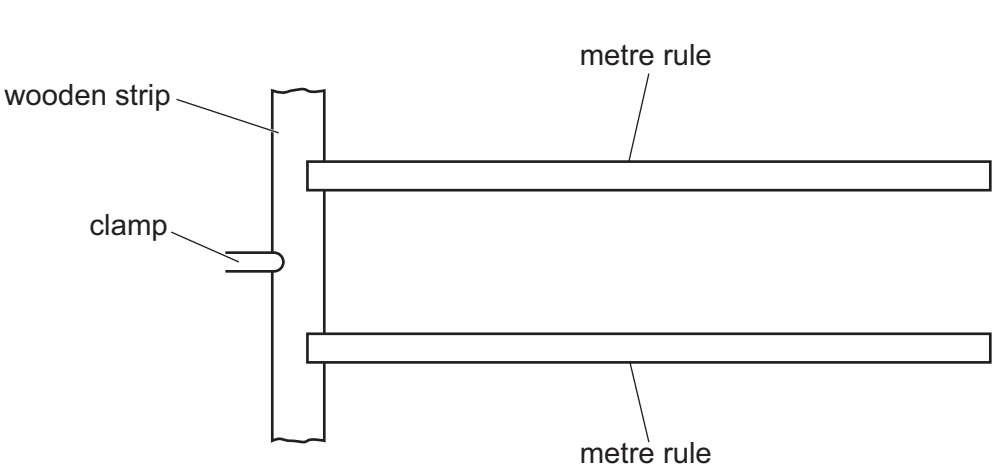

Fig. 2.3

- Pour all the water from the beaker into the bottle.
- Place the bottle on the two rules as shown in Fig. 2.4.

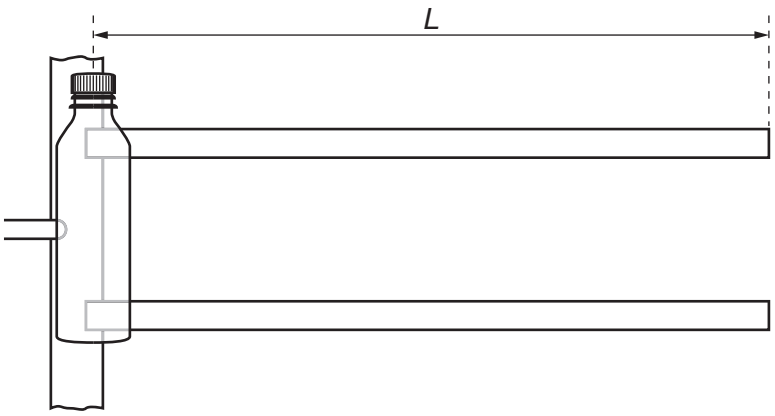

Fig. 2.4 (not to scale)

- Release the bottle. Adjust the rules so that the bottle rolls to the end of the rules.
- The distance that the bottle rolls on the rules is *L*, as shown in Fig. 2.4.

  Measure and record *L*.

L = ... [1]

www.dynamicpapers.com

(c) (i) • Stand the bottle upright on the bench.

• The height of the water in the bottle is h, as shown in Fig. 2.5.

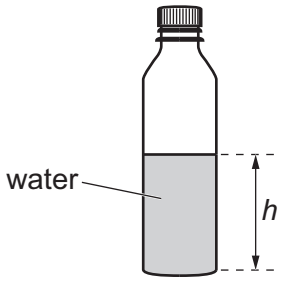

Fig. 2.5

Measure and record h.

h = ...

• The time for the bottle to roll distance L on the rules is t.

Take measurements to determine t.

t = ...
[3]

(ii) A value for the acceleration a of the bottle is given by

$$a = \frac{2L}{t^2}.$$

Calculate a.

a = ... [1]

(iii) Justify the number of significant figures that you have given for your value of a.

.....

.....

..... [1]

© UCLES 2025

DO NOT WRITE IN THIS MARGIN
DO NOT WRITE IN THIS MARGIN
DO NOT WRITE IN THIS MARGIN
DO NOT WRITE IN THIS MARGIN
DO NOT WRITE IN THIS MARGIN

www.dynamicpapers.com

DO NOT WRITE IN THIS MARGIN
DO NOT WRITE IN THIS MARGIN
DO NOT WRITE IN THIS MARGIN
DO NOT WRITE IN THIS MARGIN
DO NOT WRITE IN THIS MARGIN

(d) • Pour approximately half the water from the bottle into the beaker.

• Repeat **(c)(i)** and **(c)(ii)**.

h = ...

t = ...

a = ...
[2]

(e) It is suggested that the relationship between a and h is

$$a = \frac{kd\sqrt{\pi h}}{2}$$

where k is a constant.

Using your data, calculate **two** values of k.

first value of k = ...

second value of k = ...
[1]

www.dynamicpapers.com

(f) It is suggested that the percentage uncertainty in the values of k is 15%.

Using this uncertainty, explain whether your results support the relationship in **(e)**.

.....

.....

.....

..... [1]

DO NOT WRITE IN THIS MARGIN
DO NOT WRITE IN THIS MARGIN
DO NOT WRITE IN THIS MARGIN
DO NOT WRITE IN THIS MARGIN
DO NOT WRITE IN THIS MARGIN

DO NOT WRITE IN THIS MARGIN
DO NOT WRITE IN THIS MARGIN
DO NOT WRITE IN THIS MARGIN
DO NOT WRITE IN THIS MARGIN
DO NOT WRITE IN THIS MARGIN

(g) (i) Describe **four** sources of uncertainty or limitations of the procedure for this experiment.

For any uncertainties in measurement that you describe, you should state the quantity being measured and a reason for the uncertainty.

1 .....

.....

2 .....

.....

3 .....

.....

4 .....

.....

[4]

(ii) Describe **four** improvements that could be made to this experiment. You may suggest the use of other apparatus or different procedures.

1 .....

.....

2 .....

.....

3 .....

.....

4 .....

.....

[4]

[Total: 20]

www.dynamicpapers.com

BLANK PAGE

DO NOT WRITE IN THIS MARGIN
DO NOT WRITE IN THIS MARGIN
DO NOT WRITE IN THIS MARGIN
DO NOT WRITE IN THIS MARGIN
DO NOT WRITE IN THIS MARGIN

www.dynamicpapers.com

BLANK PAGE

DO NOT WRITE IN THIS MARGIN
DO NOT WRITE IN THIS MARGIN
DO NOT WRITE IN THIS MARGIN
DO NOT WRITE IN THIS MARGIN
DO NOT WRITE IN THIS MARGIN

www.dynamicpapers.com

BLANK PAGE

DO NOT WRITE IN THIS MARGIN
DO NOT WRITE IN THIS MARGIN
DO NOT WRITE IN THIS MARGIN
DO NOT WRITE IN THIS MARGIN
DO NOT WRITE IN THIS MARGIN

Permission to reproduce items where third-party owned material protected by copyright is included has been sought and cleared where possible. Every reasonable effort has been made by the publisher (UCLES) to trace copyright holders, but if any items requiring clearance have unwittingly been included, the publisher will be pleased to make amends at the earliest possible opportunity.

To avoid the issue of disclosure of answer-related information to candidates, all copyright acknowledgements are reproduced online in the Cambridge Assessment International Education Copyright Acknowledgements Booklet. This is produced for each series of examinations and is freely available to download at www.cambridgeinternational.org after the live examination series.

Cambridge Assessment International Education is part of Cambridge Assessment. Cambridge Assessment is the brand name of the University of Cambridge Local Examinations Syndicate (UCLES), which is a department of the University of Cambridge.

© UCLES 2025