* 0000800000001 * DFD
www.dynamicpapers.com

Cambridge Assessment International Education

Cambridge International AS & A Level

CANDIDATE NAME

CENTRE NUMBER

CANDIDATE NUMBER

9417718999

PHYSICS **9702/34**

Paper 3 Advanced Practical Skills 2 **October/November 2025**

2 hours

You must answer on the question paper.

You will need: The materials and apparatus listed in the confidential instructions

INSTRUCTIONS

- Answer **all** questions.
- Use a black or dark blue pen. You may use an HB pencil for any diagrams or graphs.
- Write your name, centre number and candidate number in the boxes at the top of the page.
- Write your answer to each question in the space provided.
- Do **not** use an erasable pen or correction fluid.
- Do **not** write on any bar codes.
- You will be allowed to work with the apparatus for a maximum of 1 hour for each question.
- You should record all your observations in the spaces provided in the question paper as soon as these observations are made.
- You may use a calculator.
- You should show all your working and use appropriate units.

INFORMATION

- The total mark for this paper is 40.
- The number of marks for each question or part question is shown in brackets [ ].

For Examiner's Use	
1	
2	
Total	

This document has **12** pages. Any blank pages are indicated.

© UCLES 2025

[Turn over

www.dynamicpapers.com

You may not need to use all of the materials provided.

1 In this experiment, you will investigate the equilibrium of forces.

(a) (i) • Assemble the apparatus as shown in Fig. 1.1.

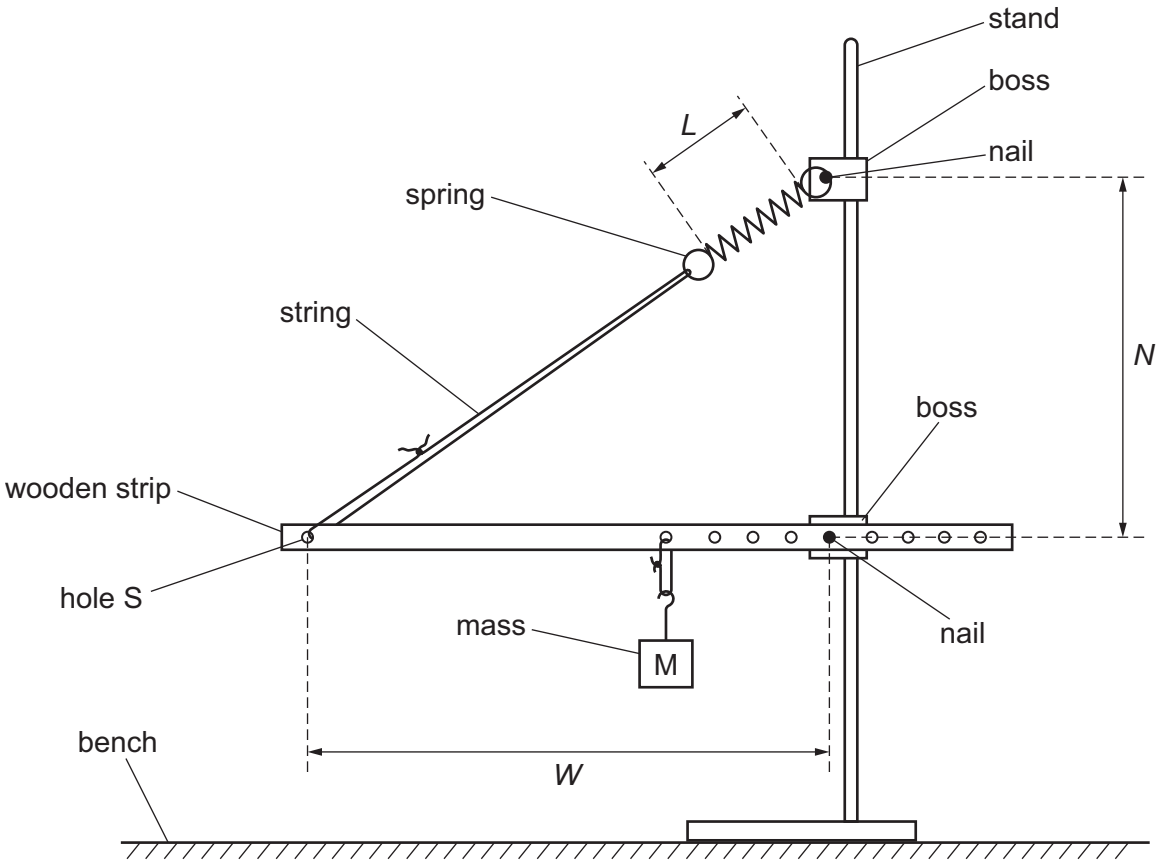

Fig. 1.1

- Adjust the height of the upper boss so that the wooden strip is parallel to the bench.
- The distance between hole S and the lower nail is *W*.

  Measure and record *W*.

  W = ...

- The distance between the two nails is *N*.

  Measure and record *N*.

  N = ...

- The length of the coiled part of the spring is *L*, as shown in Fig. 1.1.

  Measure and record *L*.

  L = ...

[3]

DO NOT WRITE IN THIS MARGIN
DO NOT WRITE IN THIS MARGIN
DO NOT WRITE IN THIS MARGIN
DO NOT WRITE IN THIS MARGIN
DO NOT WRITE IN THIS MARGIN

© UCLES 2025

www.dynamicpapers.com

(ii) Calculate Z, where

$$Z = \frac{W}{\sqrt{(N^2 + W^2)}}.$$

Z = ... [1]

DO NOT WRITE IN THIS MARGIN
DO NOT WRITE IN THIS MARGIN
DO NOT WRITE IN THIS MARGIN
DO NOT WRITE IN THIS MARGIN
DO NOT WRITE IN THIS MARGIN

www.dynamicpapers.com

(b) Change *W* by moving the lower nail to another hole in the wooden strip. Adjust the height of the upper boss so that the wooden strip is parallel to the bench.

Measure and record *W*, *N* and *L*. Repeat until you have six sets of values.
Record your results in a table. Include values of *Z* in your table.

[8]

(c) **(i)** Plot a graph of *L* on the *y*-axis against *Z* on the *x*-axis. [3]

(ii) Draw the straight line of best fit. [1]

(iii) Determine the gradient and *y*-intercept of this line.

gradient = ...

y-intercept = ...
[2]

© UCLES 2025

DO NOT WRITE IN THIS MARGIN
DO NOT WRITE IN THIS MARGIN
DO NOT WRITE IN THIS MARGIN
DO NOT WRITE IN THIS MARGIN
DO NOT WRITE IN THIS MARGIN

www.dynamicpapers.com

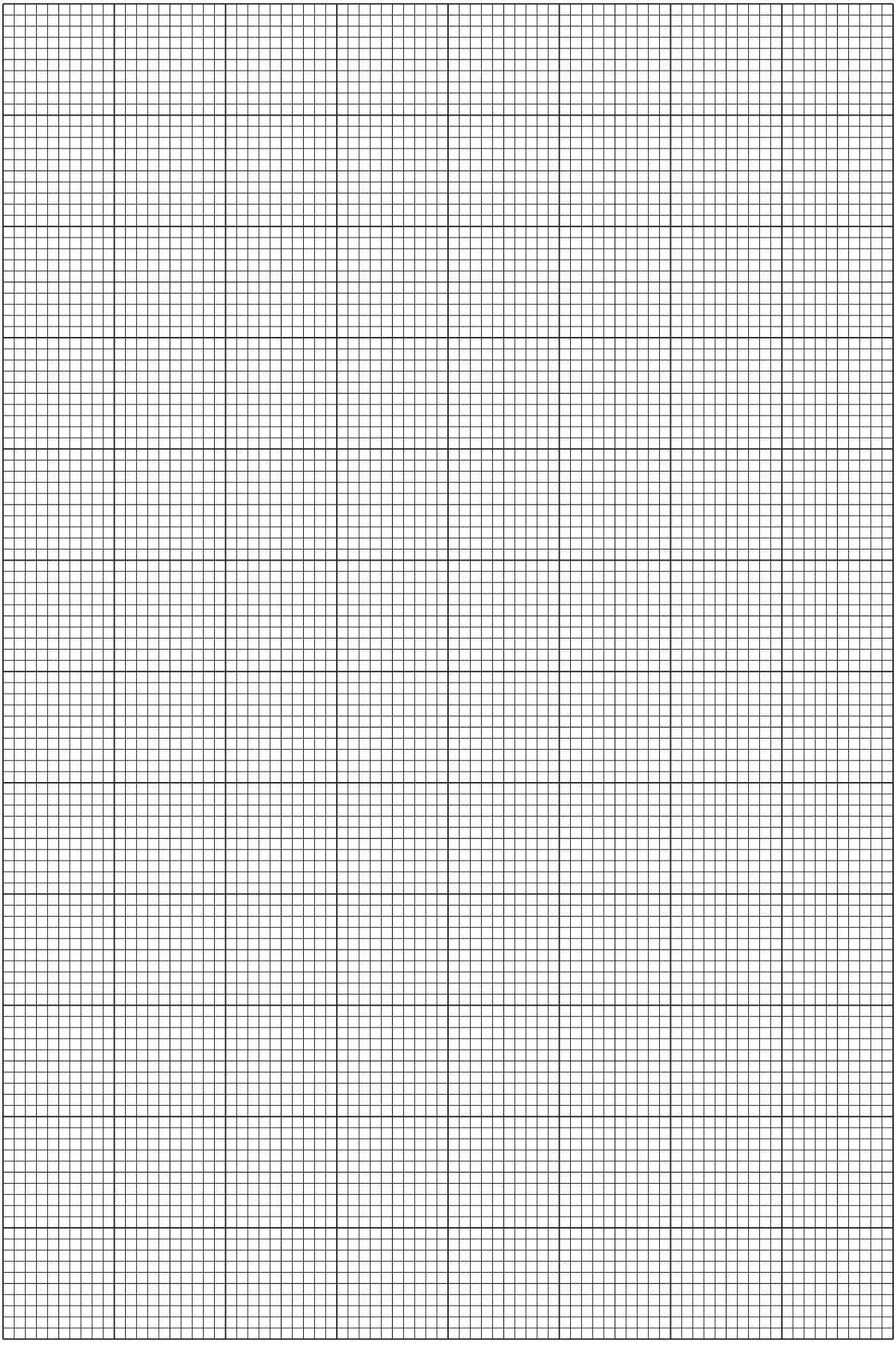

DO NOT WRITE IN THIS MARGIN
DO NOT WRITE IN THIS MARGIN
DO NOT WRITE IN THIS MARGIN
DO NOT WRITE IN THIS MARGIN
DO NOT WRITE IN THIS MARGIN

www.dynamicpapers.com

(d) It is suggested that the quantities L and Z are related by the equation

$$L = aZ + b$$

where a and b are constants.

Use your answers in **(c)(iii)** to determine the values of a and b.
Give appropriate units.

a = ...

b = ...
[2]

[Total: 20]

DO NOT WRITE IN THIS MARGIN
DO NOT WRITE IN THIS MARGIN
DO NOT WRITE IN THIS MARGIN
DO NOT WRITE IN THIS MARGIN
DO NOT WRITE IN THIS MARGIN

www.dynamicpapers.com

BLANK PAGE

DO NOT WRITE IN THIS MARGIN
DO NOT WRITE IN THIS MARGIN
DO NOT WRITE IN THIS MARGIN
DO NOT WRITE IN THIS MARGIN
DO NOT WRITE IN THIS MARGIN

www.dynamicpapers.com

You may not need to use all of the materials provided.

2 In this experiment, you will investigate the motion of a sphere rolling along a track.

(a) You are provided with a length of plastic channel. When the channel is positioned with its open side at the top, it forms a track with a pair of rails along which a sphere can roll.

An end view of the channel is shown in Fig. 2.1.

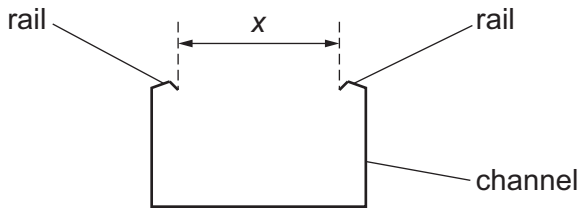

Fig. 2.1

The distance between the rails is *x*.

Measure and record *x*.

x = ... [1]

(b) (i) • Set up the apparatus as shown in Fig. 2.2.

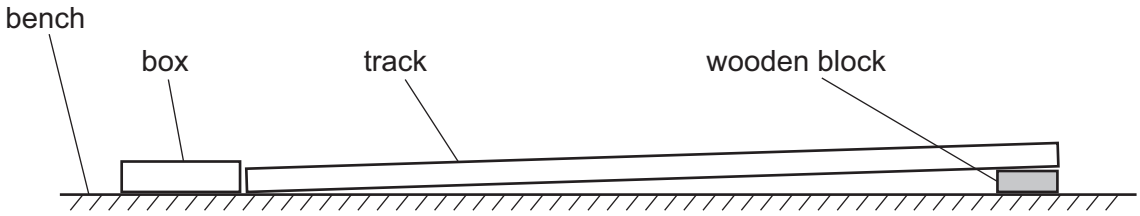

Fig. 2.2

- You are provided with two spheres.

  Place the **smaller** sphere on the track. If necessary, adjust the position of the wooden block until the sphere is able to roll along the full length of the track and into the box.

- Secure the block to the track with a small piece of adhesive putty as shown in Fig. 2.3. **The block and track must remain in these positions for the rest of the experiment.**

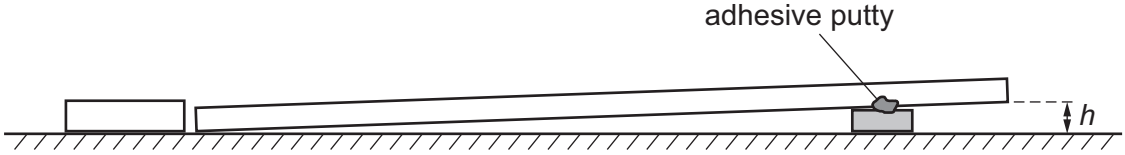

Fig. 2.3

© UCLES 2025

DO NOT WRITE IN THIS MARGIN
DO NOT WRITE IN THIS MARGIN
DO NOT WRITE IN THIS MARGIN
DO NOT WRITE IN THIS MARGIN
DO NOT WRITE IN THIS MARGIN

DO NOT WRITE IN THIS MARGIN
DO NOT WRITE IN THIS MARGIN
DO NOT WRITE IN THIS MARGIN
DO NOT WRITE IN THIS MARGIN
DO NOT WRITE IN THIS MARGIN

- The height of the raised end of the track above the bench is h, as shown in Fig. 2.3.

  Measure and record h.

h = ... [1]

(ii) Estimate the percentage uncertainty in your value of h. Show your working.

percentage uncertainty = ... % [1]

(c) (i)
- Measure and record the diameter d of the smaller sphere.

d = ...

- Calculate $1 - \left(\frac{x}{d}\right)^2$.

$1 - \left(\frac{x}{d}\right)^2$ = ...
[1]

(ii)
- Place the smaller sphere on the track at the raised end.
- Release the sphere.
- The time taken for the sphere to roll along the track into the box is t.

  Take measurements to determine t.

t = ... [2]

www.dynamicpapers.com

(d) Repeat **(c)** using the **larger** sphere.

d = ...

$1 - \left(\frac{x}{d}\right)^2$ = ...

t = ...
[3]

(e) It is suggested that the relationship between t, h, x and d is

$$t^2 h = k\left(5 + \frac{2}{1 - \left(\frac{x}{d}\right)^2}\right)$$

where k is a constant.

(i) Using your data, calculate **two** values of k.

first value of k = ...

second value of k = ...
[1]

(ii) Justify the number of significant figures that you have given for your values of k.

.....

.....

..... [1]

DO NOT WRITE IN THIS MARGIN
DO NOT WRITE IN THIS MARGIN
DO NOT WRITE IN THIS MARGIN
DO NOT WRITE IN THIS MARGIN
DO NOT WRITE IN THIS MARGIN

© UCLES 2025

www.dynamicpapers.com

(f) It is suggested that the percentage uncertainty in the values of k is 30%.

Using this uncertainty, explain whether your results support the relationship in **(e)**.

.....

.....

.....

..... [1]

DO NOT WRITE IN THIS MARGIN
DO NOT WRITE IN THIS MARGIN
DO NOT WRITE IN THIS MARGIN
DO NOT WRITE IN THIS MARGIN
DO NOT WRITE IN THIS MARGIN

www.dynamicpapers.com

(g) (i) Describe **four** sources of uncertainty or limitations of the procedure for this experiment.

For any uncertainties in measurement that you describe, you should state the quantity being measured and a reason for the uncertainty.

1 .....

.....

2 .....

.....

3 .....

.....

4 .....

.....

[4]

(ii) Describe **four** improvements that could be made to this experiment. You may suggest the use of other apparatus or different procedures.

1 .....

.....

2 .....

.....

3 .....

.....

4 .....

.....

[4]

[Total: 20]

DO NOT WRITE IN THIS MARGIN
DO NOT WRITE IN THIS MARGIN
DO NOT WRITE IN THIS MARGIN
DO NOT WRITE IN THIS MARGIN
DO NOT WRITE IN THIS MARGIN

Permission to reproduce items where third-party owned material protected by copyright is included has been sought and cleared where possible. Every reasonable effort has been made by the publisher (UCLES) to trace copyright holders, but if any items requiring clearance have unwittingly been included, the publisher will be pleased to make amends at the earliest possible opportunity.

To avoid the issue of disclosure of answer-related information to candidates, all copyright acknowledgements are reproduced online in the Cambridge Assessment International Education Copyright Acknowledgements Booklet. This is produced for each series of examinations and is freely available to download at www.cambridgeinternational.org after the live examination series.

Cambridge Assessment International Education is part of Cambridge Assessment. Cambridge Assessment is the brand name of the University of Cambridge Local Examinations Syndicate (UCLES), which is a department of the University of Cambridge.