* 0000800000001 *

www.dynamicpapers.com

Cambridge Assessment International Education

Cambridge International AS & A Level

CANDIDATE NAME

CENTRE NUMBER

CANDIDATE NUMBER

* 4 2 4 1 3 3 3 2 9 2 *

PHYSICS **9702/35**

Paper 3 Advanced Practical Skills 1 **October/November 2024**

2 hours

You must answer on the question paper.

You will need: The materials and apparatus listed in the confidential instructions

INSTRUCTIONS

- Answer **all** questions.
- Use a black or dark blue pen. You may use an HB pencil for any diagrams or graphs.
- Write your name, centre number and candidate number in the boxes at the top of the page.
- Write your answer to each question in the space provided.
- Do **not** use an erasable pen or correction fluid.
- Do **not** write on any bar codes.
- You will be allowed to work with the apparatus for a maximum of 1 hour for each question.
- You should record all your observations in the spaces provided in the question paper as soon as these observations are made.
- You may use a calculator.
- You should show all your working and use appropriate units.

INFORMATION

- The total mark for this paper is 40.
- The number of marks for each question or part question is shown in brackets [ ].

For Examiner's Use	
1	
2	
Total	

This document has **12** pages. Any blank pages are indicated.

© UCLES 2024

[Turn over

BLANK PAGE

DO NOT WRITE IN THIS MARGIN
DO NOT WRITE IN THIS MARGIN
DO NOT WRITE IN THIS MARGIN
DO NOT WRITE IN THIS MARGIN
DO NOT WRITE IN THIS MARGIN

* 0000800000003 *

www.dynamicpapers.com

You may not need to use all of the materials provided.

1 In this experiment, you will investigate the balancing of a metre rule.

(a) • Set up the apparatus as shown in Fig. 1.1.

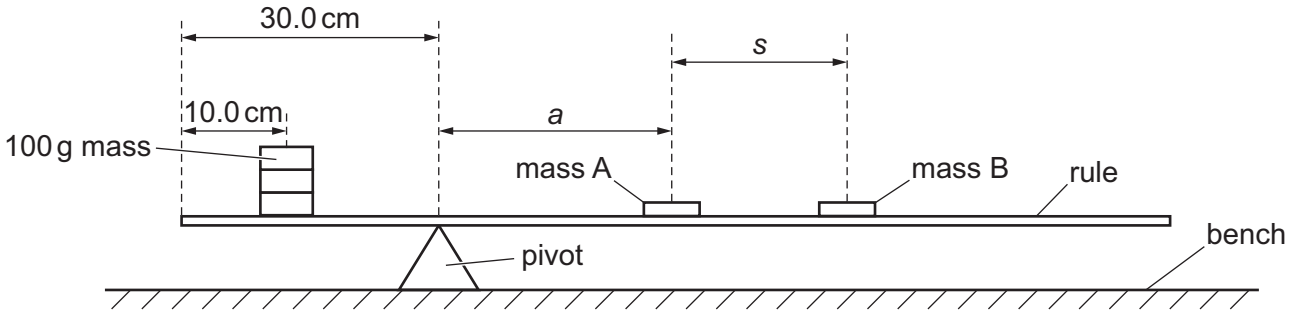

Fig. 1.1

- Use the adhesive putty to fix three 100 g slotted masses with their centres above the 10.0 cm mark on the rule, as shown in Fig. 1.1.
- Place the rule on the pivot at the 30.0 cm mark.

  The 100 g masses and the pivot must remain at these positions throughout the experiment.
- Place masses A and B on the rule.
- The distance between the centre of A and the pivot is *a*.
  The distance between the centre of B and the centre of A is *s*.

  Adjust the position of A until *a* is approximately 20 cm.
- Adjust the position of B until the rule is balanced.
- Determine *a* and *s*.

a = ... cm

s = ... cm
[1]

DO NOT WRITE IN THIS MARGIN
DO NOT WRITE IN THIS MARGIN
DO NOT WRITE IN THIS MARGIN
DO NOT WRITE IN THIS MARGIN
DO NOT WRITE IN THIS MARGIN

© UCLES 2024

(b) Change the position of A. Adjust the position of B until the rule is balanced. Determine a and s. Repeat until you have six sets of values of a and s. Do **not** use values of a less than 10.0 cm.

Record your results in a table. Include values of $\frac{1}{a}$ and $\frac{s}{a}$ in your table.

[10]

(c) **(i)** Plot a graph of $\frac{s}{a}$ on the y-axis against $\frac{1}{a}$ on the x-axis. [3]

(ii) Draw the straight line of best fit. [1]

(iii) Determine the gradient and y-intercept of this line.

gradient = ...

y-intercept = ...

[2]

DO NOT WRITE IN THIS MARGIN

DO NOT WRITE IN THIS MARGIN

DO NOT WRITE IN THIS MARGIN

DO NOT WRITE IN THIS MARGIN

DO NOT WRITE IN THIS MARGIN

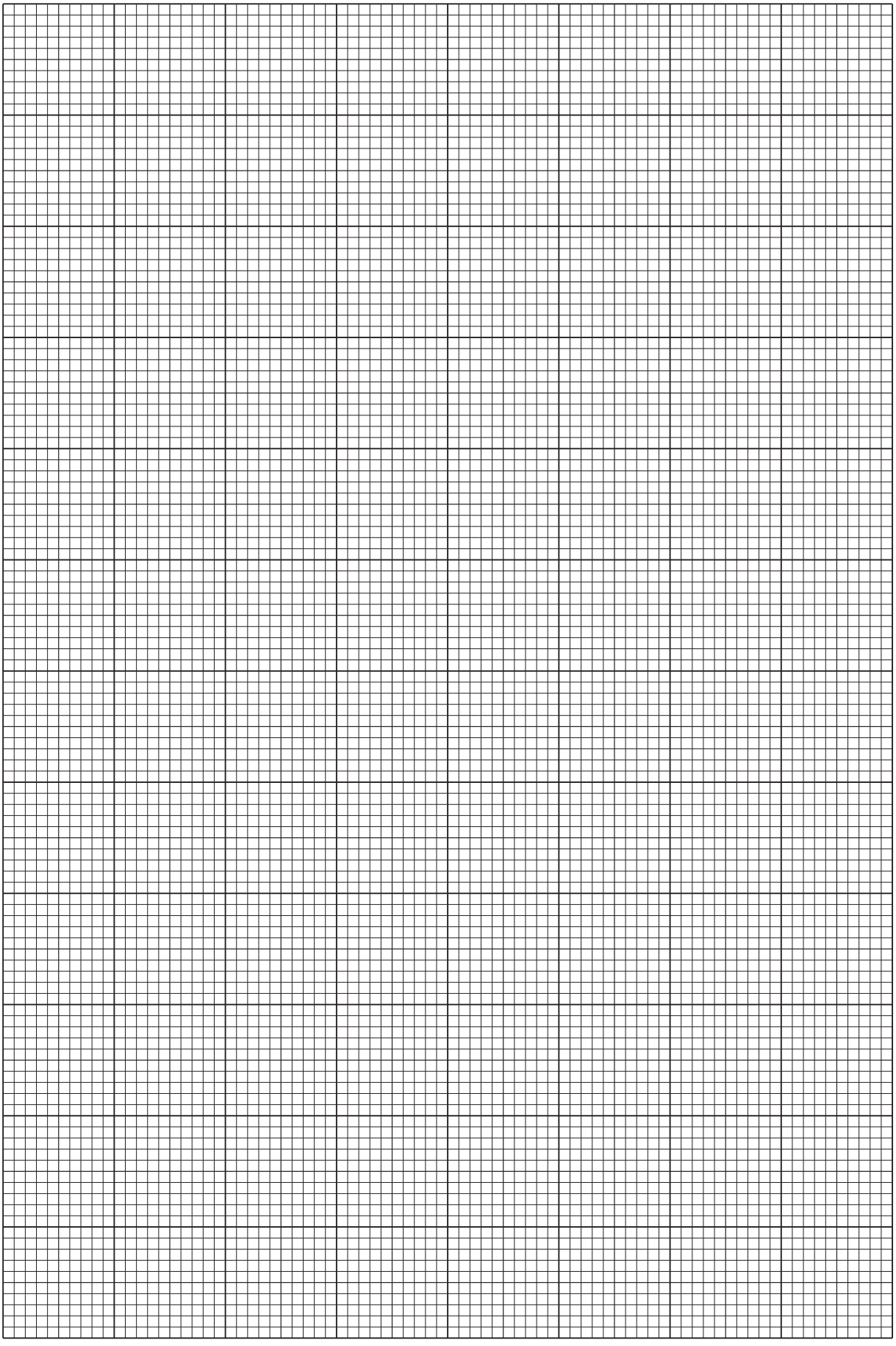

DO NOT WRITE IN THIS MARGIN
DO NOT WRITE IN THIS MARGIN
DO NOT WRITE IN THIS MARGIN
DO NOT WRITE IN THIS MARGIN
DO NOT WRITE IN THIS MARGIN

(d) (i) It is suggested that the quantities a and s are related by the equation

$$\frac{s}{a} = \frac{P}{a} + Q$$

where P and Q are constants.

Using your answers in **(c)(iii)**, determine the values of P and Q.
Give appropriate units.

P = ...

Q = ...
[2]

(ii) Theory suggests that

$$P = \frac{(Z - R)d}{m}$$

where $Z = 300\,\text{g}$,
$d = 20.0\,\text{cm}$,
$m = 50\,\text{g}$ and
R is a constant.

Using your value of P, determine a value for R.
Give an appropriate unit.

R = ... [1]

[Total: 20]

DO NOT WRITE IN THIS MARGIN
DO NOT WRITE IN THIS MARGIN
DO NOT WRITE IN THIS MARGIN
DO NOT WRITE IN THIS MARGIN
DO NOT WRITE IN THIS MARGIN

You may not need to use all of the materials provided.

2 In this experiment, you will investigate the oscillations of a wooden rod.

(a) (i) You are provided with two identical wooden rods. The length of one rod is L and the diameter of the rod is d, as shown in Fig. 2.1.

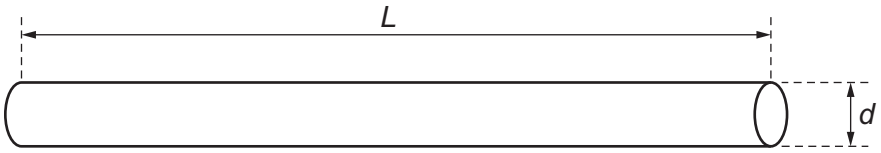

Fig. 2.1 (not to scale)

- Measure and record L.

L = ...

- Using the micrometer, measure and record d.

d = ...

- The volume V of the rod is given by

$$V = \frac{\pi d^2 L}{4}.$$

Calculate V.

V = ...
[2]

(ii) Justify the number of significant figures that you have given for your value of V.

.....

.....

..... [1]

DO NOT WRITE IN THIS MARGIN
DO NOT WRITE IN THIS MARGIN
DO NOT WRITE IN THIS MARGIN
DO NOT WRITE IN THIS MARGIN
DO NOT WRITE IN THIS MARGIN

(b) (i) • Set up the apparatus as shown in Fig. 2.2.

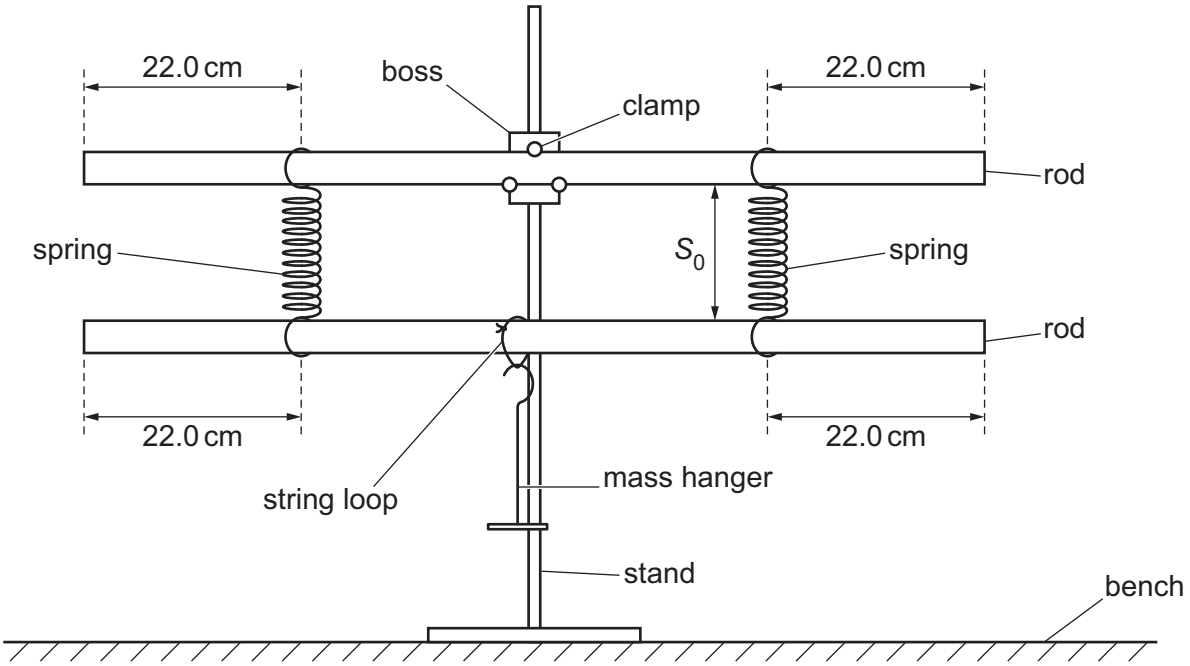

Fig. 2.2 (not to scale)

- Clamp one rod at its midpoint so that it is parallel to the bench.
- Slide the string loop onto the other rod.
- Slide the springs onto the rods and adjust the positions of the springs so that each spring is 22.0 cm from the nearest end of the rod, as shown in Fig. 2.2.
- Hang the mass hanger from the string loop. Adjust the position of the string loop so that it is at the midpoint of the lower rod.
- The distance between the two rods is S_0.

  Measure and record S_0.

S_0 = ... m [1]

(ii) Estimate the percentage uncertainty in your value of S_0. Show your working.

percentage uncertainty = ...% [1]

DO NOT WRITE IN THIS MARGIN

(iii) • Add a 100 g slotted mass to the mass hanger.

• The distance between the two rods is now S_1.

Measure and record S_1.

S_1 = ... m

• The spring constant k of the arrangement is given by

$$k = \frac{W}{S_1 - S_0}$$

where W has the value 0.98 N.

Calculate k.

k = ... $N m^{-1}$
[1]

(c) • The total mass hanging from the string loop is M.

Record M.

M = ... kg

• Move the lower rod a small distance downwards. Release the rod. The rod oscillates in a vertical plane.

• Take measurements to determine the period T of the oscillations.

T = ... s
[2]

DO NOT WRITE IN THIS MARGIN
DO NOT WRITE IN THIS MARGIN
DO NOT WRITE IN THIS MARGIN
DO NOT WRITE IN THIS MARGIN
DO NOT WRITE IN THIS MARGIN

(d) • Add an additional mass of 200 g to the mass hanger.

• Repeat **(c)**.

M = ... kg

T = ... s

[2]

DO NOT WRITE IN THIS MARGIN

DO NOT WRITE IN THIS MARGIN

DO NOT WRITE IN THIS MARGIN

DO NOT WRITE IN THIS MARGIN

DO NOT WRITE IN THIS MARGIN

www.dynamicpapers.com

DO NOT WRITE IN THIS MARGIN
DO NOT WRITE IN THIS MARGIN
DO NOT WRITE IN THIS MARGIN
DO NOT WRITE IN THIS MARGIN
DO NOT WRITE IN THIS MARGIN

(e) It is suggested that the relationship between T, M, V and k is

$$\rho V = \frac{kT^2}{4\pi^2} - M$$

where ρ is a constant.

Using your data, calculate two values of ρ.

first value of ρ = ...

second value of ρ = ...

[1]

(f) It is suggested that the percentage uncertainty in the values of ρ is 15%.

Using this uncertainty, explain whether your results support the relationship in **(e)**.

.....

.....

.....

..... [1]

(g) (i) Describe **four** sources of uncertainty or limitations of the procedure for this experiment.

For any uncertainties in measurement that you describe, you should state the quantity being measured and a reason for the uncertainty.

1 .....

.....

2 .....

.....

3 .....

.....

4 .....

.....

[4]

(ii) Describe **four** improvements that could be made to this experiment. You may suggest the use of other apparatus or different procedures.

1 .....

.....

2 .....

.....

3 .....

.....

4 .....

.....

[4]

[Total: 20]

DO NOT WRITE IN THIS MARGIN

DO NOT WRITE IN THIS MARGIN

DO NOT WRITE IN THIS MARGIN

DO NOT WRITE IN THIS MARGIN

DO NOT WRITE IN THIS MARGIN

Permission to reproduce items where third-party owned material protected by copyright is included has been sought and cleared where possible. Every reasonable effort has been made by the publisher (UCLES) to trace copyright holders, but if any items requiring clearance have unwittingly been included, the publisher will be pleased to make amends at the earliest possible opportunity.

To avoid the issue of disclosure of answer-related information to candidates, all copyright acknowledgements are reproduced online in the Cambridge Assessment International Education Copyright Acknowledgements Booklet. This is produced for each series of examinations and is freely available to download at www.cambridgeinternational.org after the live examination series.

Cambridge Assessment International Education is part of Cambridge Assessment. Cambridge Assessment is the brand name of the University of Cambridge Local Examinations Syndicate (UCLES), which is a department of the University of Cambridge.

© UCLES 2024