* 0000800000001 *

www.dynamicpapers.com

Cambridge Assessment International Education

Cambridge International AS & A Level

CANDIDATE NAME

CENTRE NUMBER

CANDIDATE NUMBER

* 0 4 7 5 1 9 1 4 3 9 *

PHYSICS **9702/34**

Paper 3 Advanced Practical Skills 2 **October/November 2024**

2 hours

You must answer on the question paper.

You will need: The materials and apparatus listed in the confidential instructions

INSTRUCTIONS

- Answer **all** questions.
- Use a black or dark blue pen. You may use an HB pencil for any diagrams or graphs.
- Write your name, centre number and candidate number in the boxes at the top of the page.
- Write your answer to each question in the space provided.
- Do **not** use an erasable pen or correction fluid.
- Do **not** write on any bar codes.
- You will be allowed to work with the apparatus for a maximum of 1 hour for each question.
- You should record all your observations in the spaces provided in the question paper as soon as these observations are made.
- You may use a calculator.
- You should show all your working and use appropriate units.

INFORMATION

- The total mark for this paper is 40.
- The number of marks for each question or part question is shown in brackets [ ].

For Examiner's Use	
1	
2	
Total	

This document has **12** pages.

© UCLES 2024

[Turn over

You may not need to use all of the materials provided.

1 In this experiment, you will investigate the flow of water through a nozzle.

(a) (i)

- Remove the plunger from the syringe body.
- Assemble the apparatus as shown in Fig. 1.1 with the bottom of the syringe nozzle approximately 15 cm above the bench.

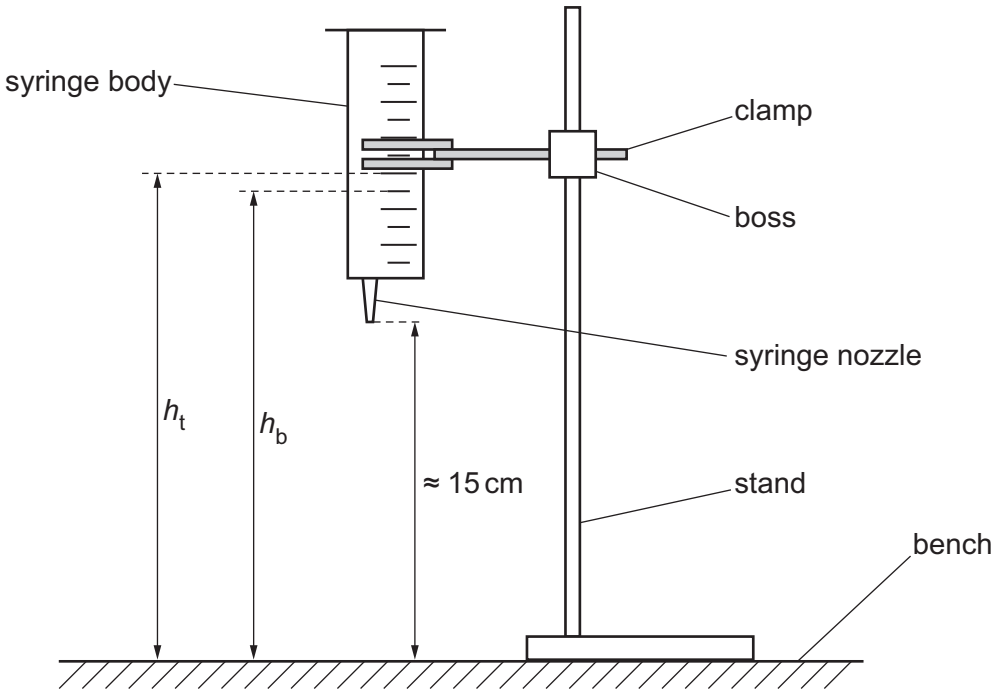

Fig. 1.1 (not to scale)

- Measure and record the height h_t of the 30 cm^3 graduation above the bench, as shown in Fig. 1.1.

h_t = ...

- Measure and record the height h_b of the 25 cm^3 graduation above the bench, as shown in Fig. 1.1.

h_b = ...

- Calculate the mean h_m of the two values h_t and h_b.

h_m = ...
[1]

DO NOT WRITE IN THIS MARGIN
DO NOT WRITE IN THIS MARGIN
DO NOT WRITE IN THIS MARGIN
DO NOT WRITE IN THIS MARGIN
DO NOT WRITE IN THIS MARGIN

(ii)
- Place the empty beaker below the syringe nozzle.
- Pour water from the other beaker into the syringe body so that the water level is near the top, then watch the water level fall.
- Start the stop-watch as the water level passes the 30 cm^3 graduation, then stop the stop-watch as the water level passes the 25 cm^3 graduation.
- Record the stop-watch reading *T*.

T = ... [2]

DO NOT WRITE IN THIS MARGIN
DO NOT WRITE IN THIS MARGIN
DO NOT WRITE IN THIS MARGIN
DO NOT WRITE IN THIS MARGIN
DO NOT WRITE IN THIS MARGIN

(b) Choose two different graduations that are 5 cm^3 apart and measure h_t, h_b and T.

Repeat until you have six sets of values of h_t, h_b and T.

Record your results in a table. Include values of h_m and $\frac{1}{T}$ in your table.

[9]

(c) **(i)** Plot a graph of $\frac{1}{T}$ on the y-axis against h_m on the x-axis. [3]

(ii) Draw the straight line of best fit. [1]

(iii) Determine the gradient and y-intercept of this line.

gradient = ...

y-intercept = ...

[2]

© UCLES 2024

DO NOT WRITE IN THIS MARGIN

DO NOT WRITE IN THIS MARGIN

DO NOT WRITE IN THIS MARGIN

DO NOT WRITE IN THIS MARGIN

DO NOT WRITE IN THIS MARGIN

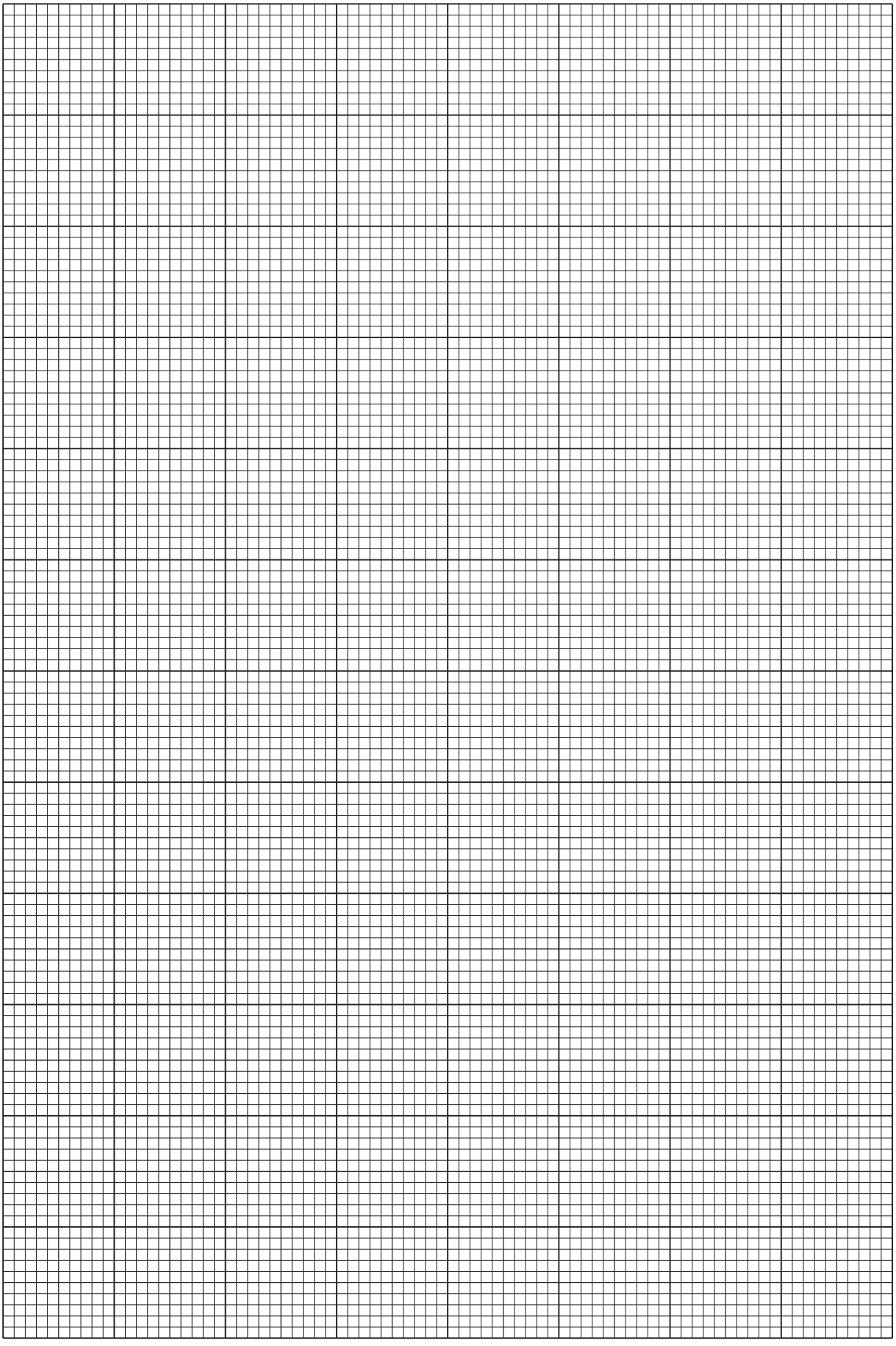

DO NOT WRITE IN THIS MARGIN
DO NOT WRITE IN THIS MARGIN
DO NOT WRITE IN THIS MARGIN
DO NOT WRITE IN THIS MARGIN
DO NOT WRITE IN THIS MARGIN

(d) It is suggested that the quantities T and h_m are related by the equation

$$\frac{1}{T} = ph_m + q$$

where p and q are constants.

Using your answers in **(c)(iii)**, determine the values of p and q.
Give appropriate units.

p = ...

q = ...
[2]

[Total: 20]

DO NOT WRITE IN THIS MARGIN
DO NOT WRITE IN THIS MARGIN
DO NOT WRITE IN THIS MARGIN
DO NOT WRITE IN THIS MARGIN
DO NOT WRITE IN THIS MARGIN

You may not need to use all of the materials provided.

2 In this experiment, you will investigate the conservation of momentum.

(a) (i) The apparatus has been partly set up as shown in Fig. 2.1.

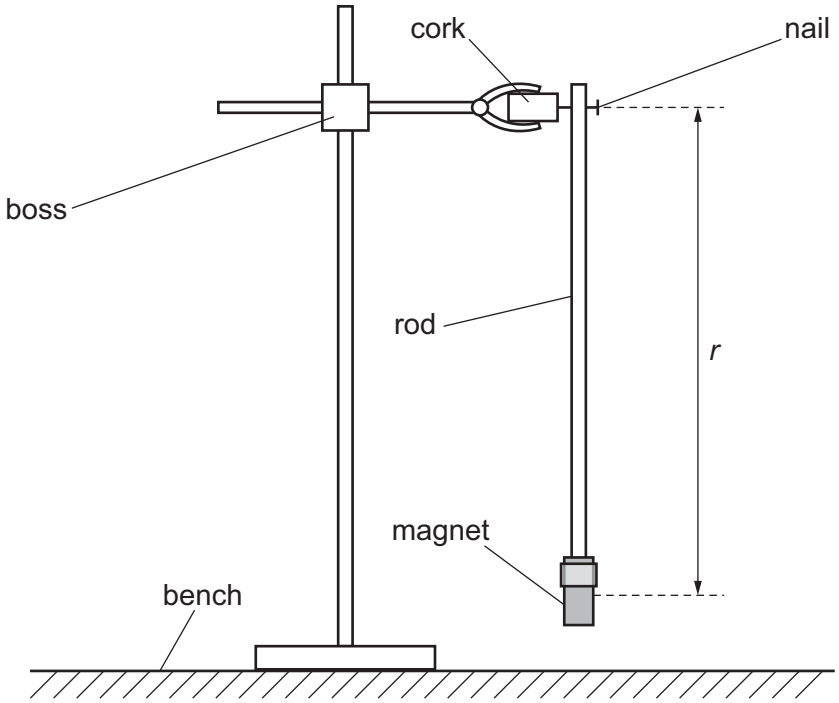

Fig. 2.1

- Check that the rod can swing freely on the nail.
- The distance between the nail and the centre of the magnet is *r*.

  Measure and record *r*.

r = ... cm

- Record the mass *M* of the magnet written on the card.

M = ... g
[2]

DO NOT WRITE IN THIS MARGIN
DO NOT WRITE IN THIS MARGIN
DO NOT WRITE IN THIS MARGIN
DO NOT WRITE IN THIS MARGIN
DO NOT WRITE IN THIS MARGIN

(ii) • Use small pieces of adhesive putty to fix the 30 cm ruler to the bench with the zero of its scale directly below the centre of the magnet, as shown in Fig. 2.2.

• Attach nut A to the bottom of the magnet. Adjust the position of the boss on the stand until the bottom of the nut is approximately 3 mm above the ruler, as shown in Fig. 2.2.

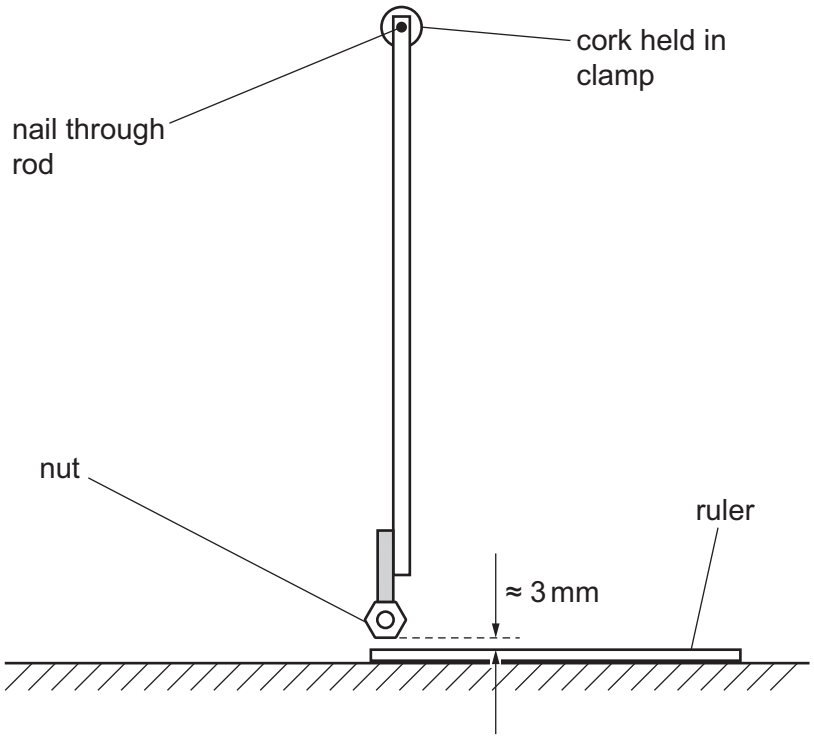

Fig. 2.2

• Record the mass *m* of nut A written on the card.

m = ... g

DO NOT WRITE IN THIS MARGIN
DO NOT WRITE IN THIS MARGIN
DO NOT WRITE IN THIS MARGIN
DO NOT WRITE IN THIS MARGIN
DO NOT WRITE IN THIS MARGIN

DO NOT WRITE IN THIS MARGIN
DO NOT WRITE IN THIS MARGIN
DO NOT WRITE IN THIS MARGIN
DO NOT WRITE IN THIS MARGIN
DO NOT WRITE IN THIS MARGIN

- Detach the nut from the magnet.
- Move the rod and hold it so that the bottom of the magnet is directly above the 15.0 cm mark on the ruler scale.
- Place the nut on the ruler so that its centre is above the zero on the ruler scale, as shown in Fig. 2.3.

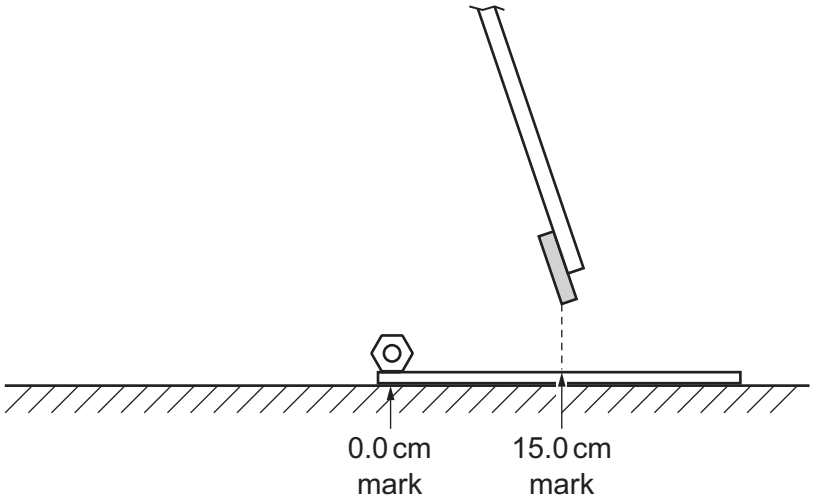

Fig. 2.3

- Release the rod so that the magnet picks up the nut as it passes and then swings back to a position *x* on the ruler scale, as shown in Fig. 2.4.

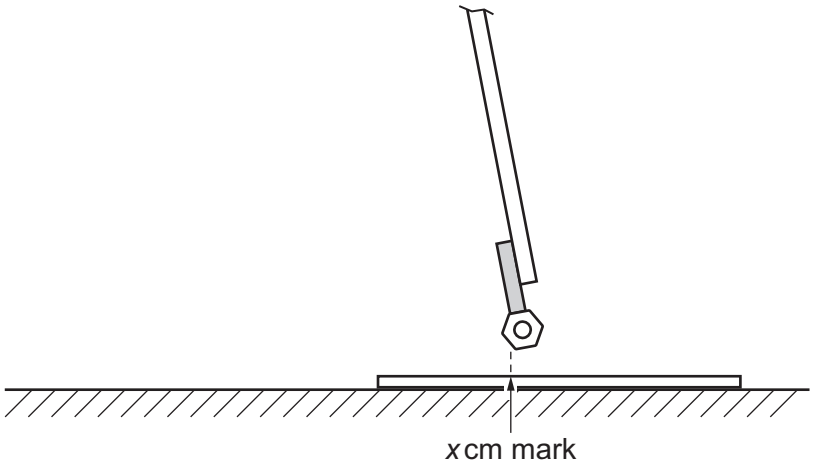

Fig. 2.4

- Read and record *x*.

x = ... cm
[2]

(iii) Estimate the percentage uncertainty in your value of x. Show your working.

percentage uncertainty = ...% [1]

(iv) Calculate h using

$$h = r - \sqrt{(r^2 - x^2)}.$$

h = ... cm [1]

(b) Repeat **(a)(ii)** and **(a)(iv)** using nut B.

m = ... g

x = ... cm

h = ... cm
[3]

DO NOT WRITE IN THIS MARGIN
DO NOT WRITE IN THIS MARGIN
DO NOT WRITE IN THIS MARGIN
DO NOT WRITE IN THIS MARGIN
DO NOT WRITE IN THIS MARGIN

DO NOT WRITE IN THIS MARGIN
DO NOT WRITE IN THIS MARGIN
DO NOT WRITE IN THIS MARGIN
DO NOT WRITE IN THIS MARGIN
DO NOT WRITE IN THIS MARGIN

(c) It is suggested that the relationship between M, m and h is

$$h = \frac{k}{(M + m)^2}$$

where k is a constant.

(i) Using your data, calculate two values of k.

first value of k = ...

second value of k = ...
[1]

(ii) Justify the number of significant figures that you have given for your values of k.

.....

.....

..... [1]

(d) It is suggested that the percentage uncertainty in the values of k is 15%.

Using this uncertainty, explain whether your results support the relationship in **(c)**.

.....

.....

.....

..... [1]

(e) (i) Describe **four** sources of uncertainty or limitations of the procedure for this experiment.

For any uncertainties in measurement that you describe, you should state the quantity being measured and a reason for the uncertainty.

1 .....

.....

2 .....

.....

3 .....

.....

4 .....

.....

[4]

(ii) Describe **four** improvements that could be made to this experiment. You may suggest the use of other apparatus or different procedures.

1 .....

.....

2 .....

.....

3 .....

.....

4 .....

.....

[4]

[Total: 20]

DO NOT WRITE IN THIS MARGIN

DO NOT WRITE IN THIS MARGIN

DO NOT WRITE IN THIS MARGIN

DO NOT WRITE IN THIS MARGIN

DO NOT WRITE IN THIS MARGIN

Permission to reproduce items where third-party owned material protected by copyright is included has been sought and cleared where possible. Every reasonable effort has been made by the publisher (UCLES) to trace copyright holders, but if any items requiring clearance have unwittingly been included, the publisher will be pleased to make amends at the earliest possible opportunity.

To avoid the issue of disclosure of answer-related information to candidates, all copyright acknowledgements are reproduced online in the Cambridge Assessment International Education Copyright Acknowledgements Booklet. This is produced for each series of examinations and is freely available to download at www.cambridgeinternational.org after the live examination series.

Cambridge Assessment International Education is part of Cambridge Assessment. Cambridge Assessment is the brand name of the University of Cambridge Local Examinations Syndicate (UCLES), which is a department of the University of Cambridge.

© UCLES 2024