www.dynamicpapers.com

Cambridge Assessment International Education

Cambridge International AS & A Level

CANDIDATE NAME

CENTRE NUMBER | | | | | |

CANDIDATE NUMBER | | | | |

9591185007

PHYSICS **9702/34**

Paper 3 Advanced Practical Skills 2 **October/November 2023**

2 hours

You must answer on the question paper.

You will need: The materials and apparatus listed in the confidential instructions

INSTRUCTIONS

- Answer **all** questions.
- Use a black or dark blue pen. You may use an HB pencil for any diagrams or graphs.
- Write your name, centre number and candidate number in the boxes at the top of the page.
- Write your answer to each question in the space provided.
- Do **not** use an erasable pen or correction fluid.
- Do **not** write on any bar codes.
- You will be allowed to work with the apparatus for a maximum of 1 hour for each question.
- You should record all your observations in the spaces provided in the question paper as soon as these observations are made.
- You may use a calculator.
- You should show all your working and use appropriate units.

INFORMATION

- The total mark for this paper is 40.
- The number of marks for each question or part question is shown in brackets [ ].

For Examiner's Use	
1	
2	
Total	

This document has **12** pages. Any blank pages are indicated.

© UCLES 2023

www.dynamicpapers.com

BLANK PAGE

www.dynamicpapers.com

You may not need to use all of the materials provided.

1 In this experiment, you will investigate an electrical circuit.

(a) • Connect the circuit shown in Fig. 1.1.

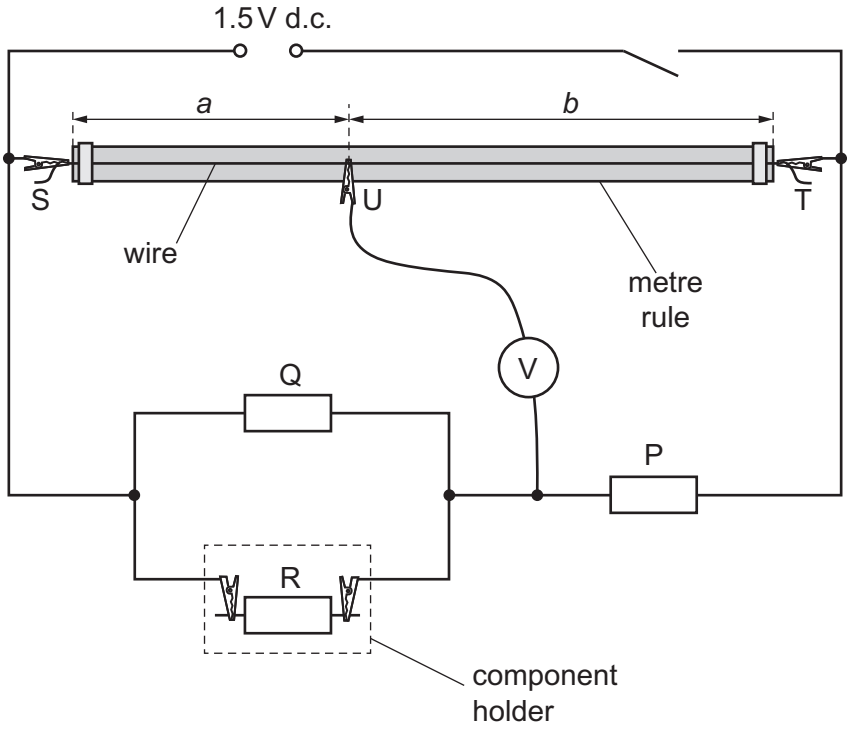

Fig. 1.1

• S, T and U are crocodile clips.

Connect one of the resistors labelled with its resistance in the component holder as resistor R, and record its resistance *R*.

R = ...

• Close the switch.

• Place U on the wire and adjust its position so that the voltmeter indicates as near to zero as possible.

• The distance between S and U is *a* and the distance between U and T is *b*, as shown in Fig. 1.1.

Measure and record *a* and *b*.

a = ...

b = ...

• Open the switch.

[2]

© UCLES 2023

[Turn over

www.dynamicpapers.com

(b) Change R and determine a and b. Repeat until you have six sets of values of R, a and b.

Record your results in a table. Include values of $\frac{1}{R}$ and $\frac{b}{a}$ in your table.

[10]

(c) **(i)** Plot a graph of $\frac{b}{a}$ on the y-axis against $\frac{1}{R}$ on the x-axis. [3]

(ii) Draw the straight line of best fit. [1]

(iii) Determine the gradient and y-intercept of this line.

gradient = ...

y-intercept = ...

[2]

© UCLES 2023

www.dynamicpapers.com

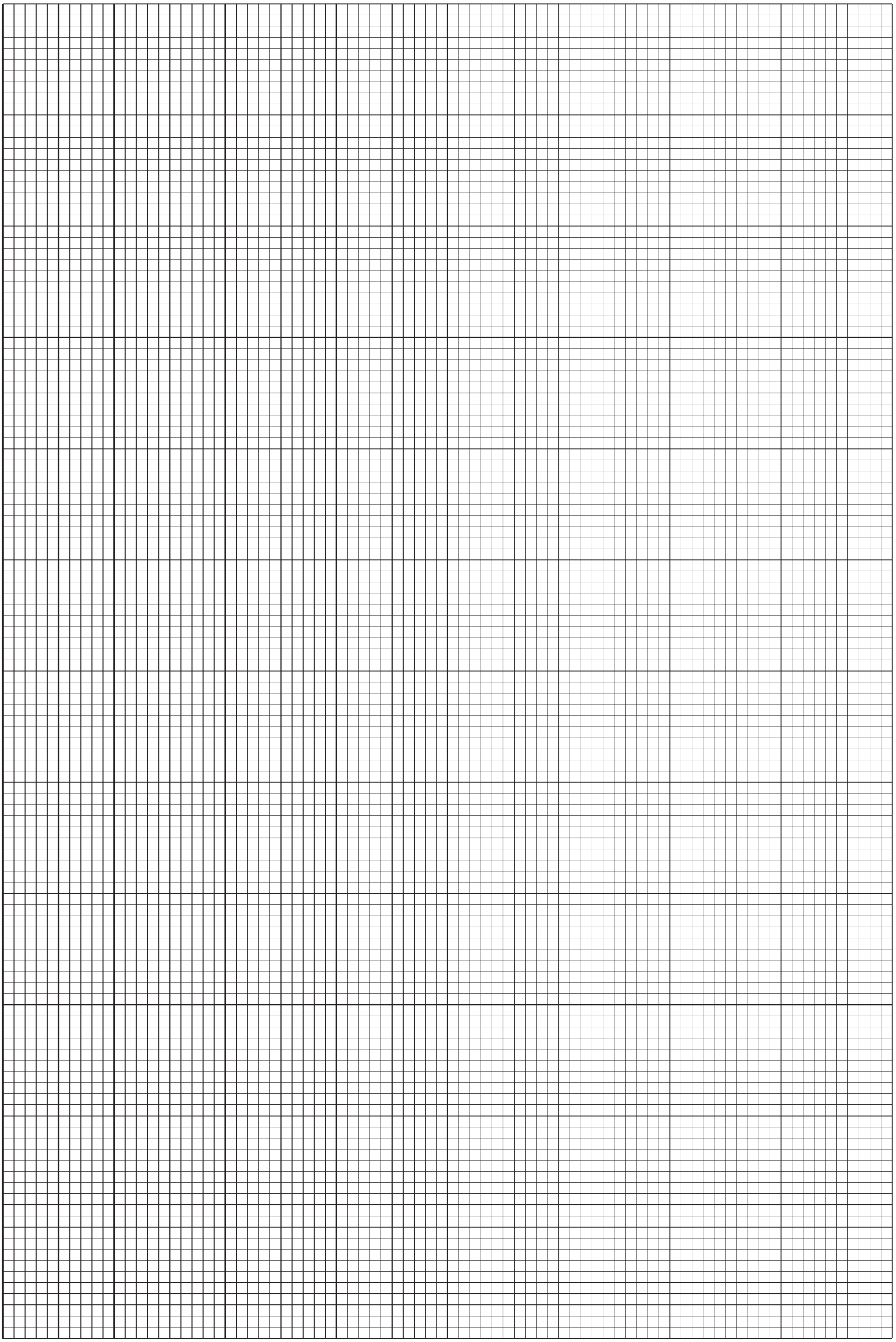

© UCLES 2023

www.dynamicpapers.com

(d) It is suggested that the quantities b, a and R are related by the equation

$$\frac{b}{a} = \frac{M}{R} + N$$

where M and N are constants.

Using your answers in **(c)(iii)**, determine the values of M and N.
Give appropriate units.

M = ...

N = ...
[2]

[Total: 20]

© UCLES 2023

www.dynamicpapers.com

You may not need to use all of the materials provided.

2 In this experiment, you will investigate the path of a jet of water.

(a) • Assemble the apparatus as shown in Fig. 2.1.

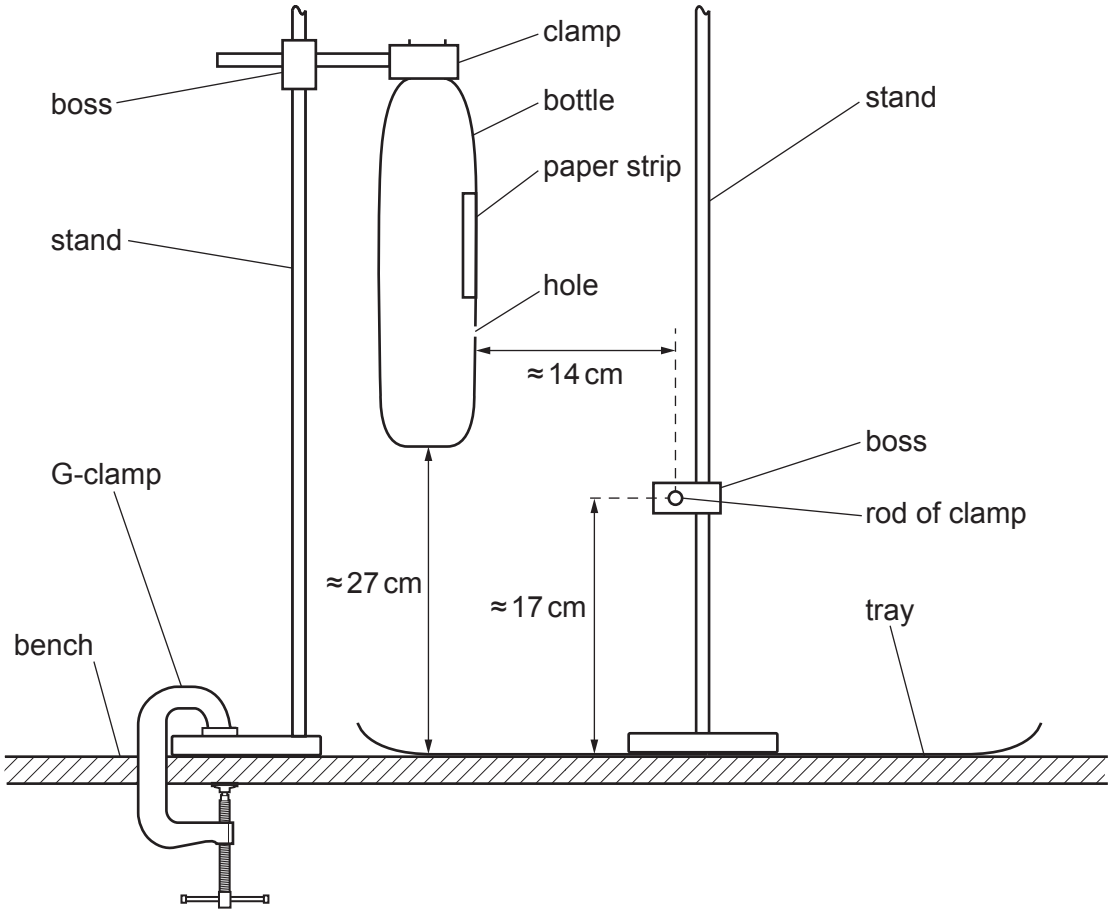

Fig. 2.1 (not to scale)

- Adjust the heights of the bosses so that the bottom of the bottle is approximately 27 cm above the tray and the rod of the clamp is approximately 17 cm above the tray.

- Move the stands so that the horizontal distance from the hole in the bottle to the rod of the clamp is approximately 14 cm, as shown in Fig. 2.1.

© UCLES 2023

[Turn over

www.dynamicpapers.com

- The height of the centre of the hole above the tray is *A*. The distance from the centre of the hole to the centre of the rod is *B*. The height of the rod above the tray is *C*, as shown in Fig. 2.2.

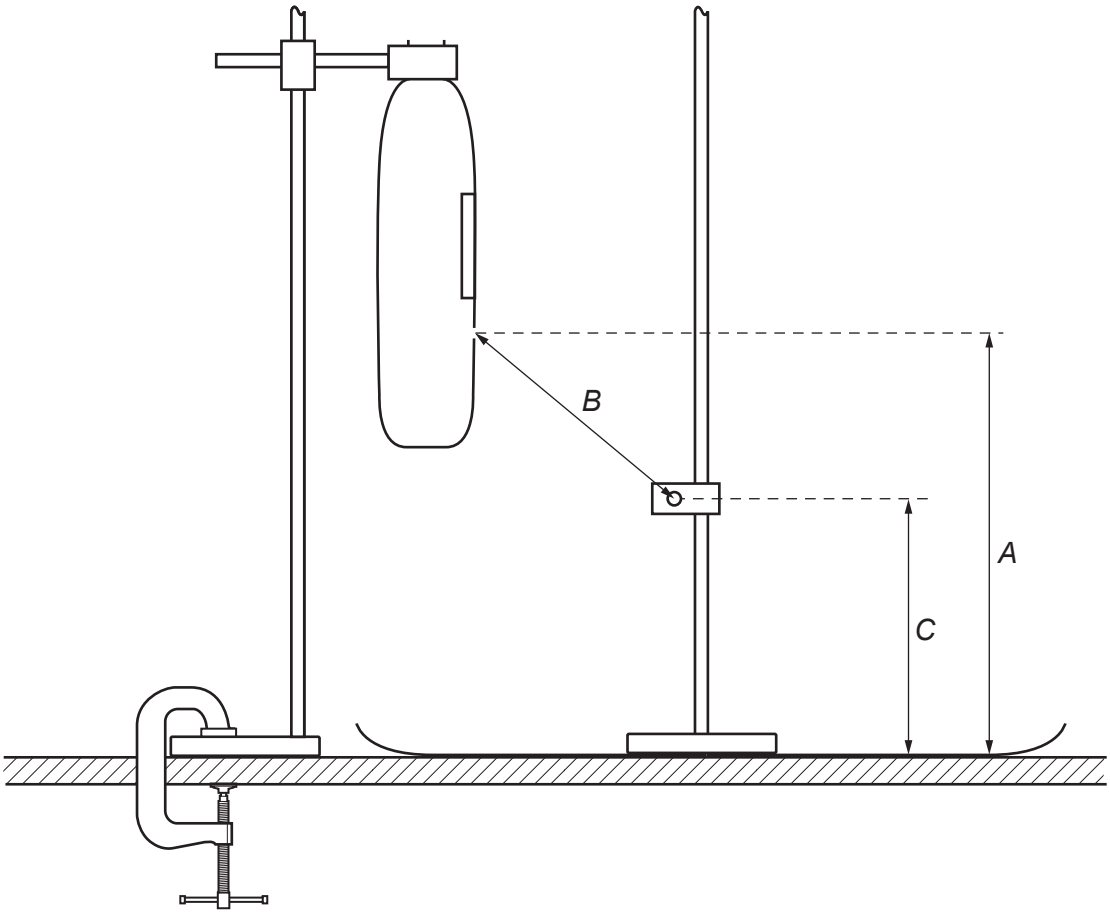

Fig. 2.2

Measure and record *A*, *B* and *C*.

A = ... cm

B = ... cm

C = ... cm

- Calculate *s* using

$$s = A - C.$$

s = ... cm

- Calculate *x* using

$$x = \sqrt{(B^2 - s^2)}.$$

x = ... cm
[3]

© UCLES 2023

www.dynamicpapers.com

(b) (i) • Position the empty jug under the rod.

• Add water to the bottle until there is a jet of water passing over the rod, as shown in Fig. 2.3.

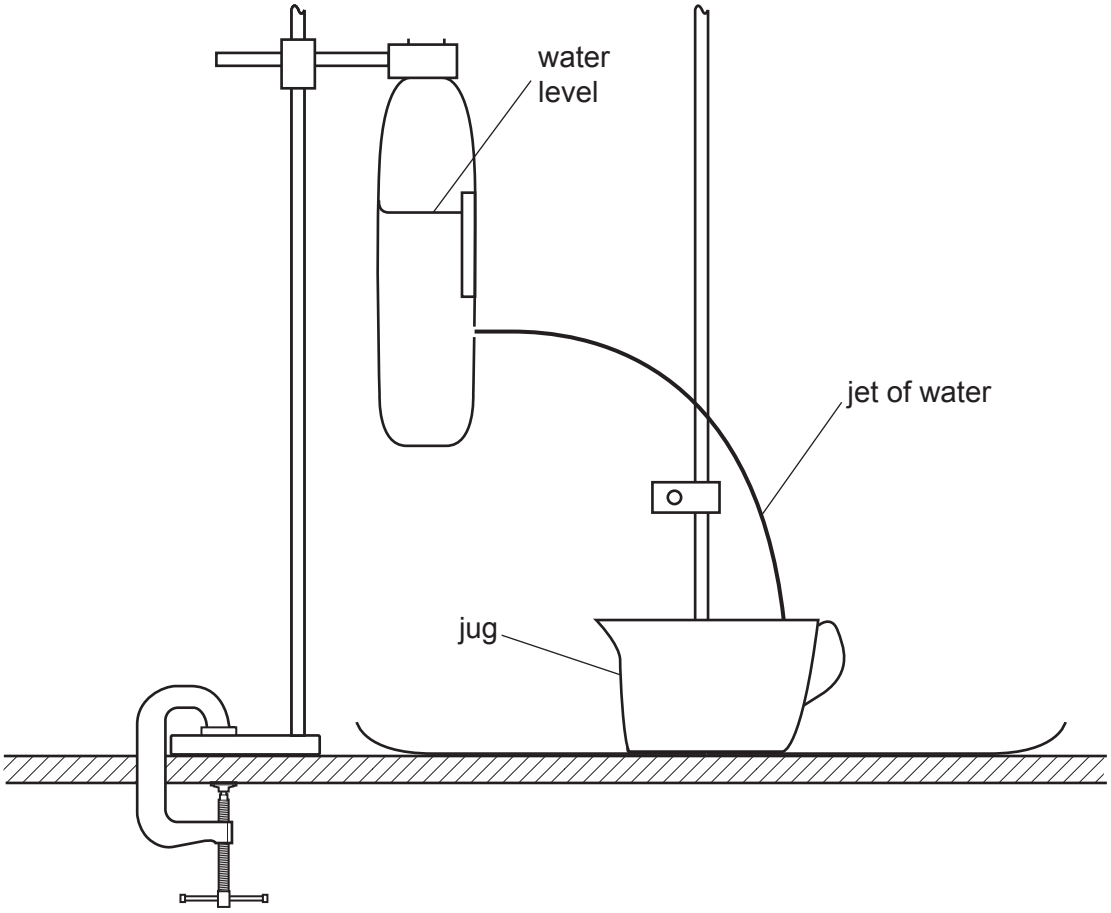

Fig. 2.3

• As the water level falls, the jet will get closer to the rod.

When the jet touches the rod, mark the water level on the paper strip, as shown in Fig. 2.4.

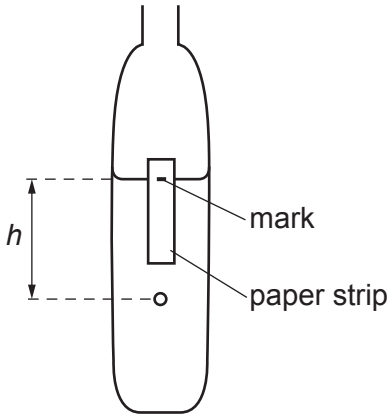

Fig. 2.4

www.dynamicpapers.com

- Measure and record the height h of the mark above the hole, as shown in Fig. 2.4.

h = ... [2]

(ii) Estimate the percentage uncertainty in your value of h. Show your working.

percentage uncertainty = ... % [1]

(c) • Increase the height of the bottom of the bottle above the tray to approximately 32 cm.

- Measure and record A and B.

A = ... cm

B = ... cm

- Calculate s and x.

s = ... cm

x = ... cm

- Repeat **(b)(i)**.

h = ...
[3]

www.dynamicpapers.com

(d) It is suggested that the relationship between x, h and s is

$$kx = \sqrt{hs}$$

where k is a constant.

(i) Using your data, calculate two values of k.

first value of k = ...

second value of k = ...
[1]

(ii) Justify the number of significant figures that you have given for your values of k.

.....

.....

..... [1]

(e) It is suggested that the percentage uncertainty in the values of k is 20%.

Using this uncertainty, explain whether your results support the relationship in **(d)**.

.....

.....

.....

..... [1]

www.dynamicpapers.com

(f) (i) Describe **four** sources of uncertainty or limitations of the procedure for this experiment.

For any uncertainties in measurement that you describe, you should state the quantity being measured and a reason for the uncertainty.

1 .....

.....

2 .....

.....

3 .....

.....

4 .....

.....

[4]

(ii) Describe **four** improvements that could be made to this experiment. You may suggest the use of other apparatus or different procedures.

1 .....

.....

2 .....

.....

3 .....

.....

4 .....

.....

[4]

[Total: 20]

Permission to reproduce items where third-party owned material protected by copyright is included has been sought and cleared where possible. Every reasonable effort has been made by the publisher (UCLES) to trace copyright holders, but if any items requiring clearance have unwittingly been included, the publisher will be pleased to make amends at the earliest possible opportunity.

To avoid the issue of disclosure of answer-related information to candidates, all copyright acknowledgements are reproduced online in the Cambridge Assessment International Education Copyright Acknowledgements Booklet. This is produced for each series of examinations and is freely available to download at www.cambridgeinternational.org after the live examination series.

Cambridge Assessment International Education is part of Cambridge Assessment. Cambridge Assessment is the brand name of the University of Cambridge Local Examinations Syndicate (UCLES), which is a department of the University of Cambridge.

© UCLES 2023