www.dynamicpapers.com

Cambridge Assessment International Education

Cambridge International AS & A Level

PHYSICS **9702/34**

Paper 3 Advanced Practical Skills 2 **May/June 2024**

CONFIDENTIAL INSTRUCTIONS

8093926580

This document gives details of how to prepare for and administer the practical exam.

The information in this document and the identity of any materials supplied by Cambridge International are confidential and must NOT reach candidates either directly or indirectly.

The supervisor must complete the report at the end of this document and return it with the scripts.

INSTRUCTIONS

- If you have any queries regarding these confidential instructions, contact Cambridge International stating the centre number, the syllabus and component number and the nature of the query.
  email info@cambridgeinternational.org
  phone +44 1223 553554

This document has **8** pages.

© UCLES 2024

www.dynamicpapers.com

General information about practical exams

Centres must follow the guidance on science practical exams given in the *Cambridge Handbook*.

Safety

Supervisors must follow national and local regulations relating to safety and first aid.

Only those procedures described in the question paper should be attempted.

Supervisors must inform candidates that materials and apparatus used in the exam should be treated with caution. Suitable eye protection should be used where necessary.

Before the exam

- The packets containing the question papers must **not** be opened before the exam.
- It is assumed that standard school laboratory facilities, as indicated in the *Guide to Planning Practical Science*, will be available.
- Spare materials and apparatus for the tasks set must be available for candidates, if required.

During the exam

- It must be made clear to candidates at the start of the exam that they may request spare materials and apparatus for the tasks set.
- Where specified, the supervisor **must** perform the experiments and record the results as instructed. This must be done **out of sight** of the candidates, using the same materials and apparatus as the candidates.
- Any assistance provided to candidates must be recorded in the supervisor's report.
- If any materials or apparatus need to be replaced, for example, in the event of breakage or loss, this must be recorded in the supervisor's report.

After the exam

- The supervisor must complete a report for each practical session held and each laboratory used.
- Each packet of scripts returned to Cambridge International must contain the following items:
  - the scripts of the candidates specified on the bar code label provided
  - the supervisor's results relevant to these candidates
  - the supervisor's reports relevant to these candidates
  - seating plans for each practical session, referring to each candidate by candidate number
  - the attendance register.

© UCLES 2024

www.dynamicpapers.com

Specific information for this practical exam

The supervisor must be a teacher of physics or other competent physicist who is familiar with the requirements of this syllabus. During the exam, the supervisor (**not** the invigilator) should obtain a sample set of numerical results by following the relevant steps in the question paper. The results should be clearly labelled 'supervisor's results' and recorded on the supervisor's report or on a spare copy of the question paper.

Organisation of the exam

- The number of sets of apparatus provided for each experiment should be $\frac{1}{2}N$, where N is the number of candidates taking the exam.
- Candidates must **not** be provided with any additional apparatus beyond that specified in these instructions.
- Candidates should be allowed access to the apparatus for each experiment for one hour only.
- After spending one hour on one experiment, candidates should change over to the other experiment.
- The order in which a candidate attempts the two experiments is immaterial.

Assistance to candidates

- Candidates should be informed that, if they find themselves in real difficulty, they may ask the supervisor for practical assistance, but that the extent of this assistance will be reported to the examiner, who may not award full credit for the relevant skills.
- Assistance should only be given when it is asked for by a candidate or where apparatus is seen to have developed a fault.
- Assistance should be restricted to enabling candidates to make observations and measurements. Observations and measurements must **not** be made for candidates, and no help should be given with data analysis or evaluation.
- In cases of faulty apparatus that prevent the required measurements from being taken, the supervisor should allow extra time to give the candidate a fair opportunity to perform the experiment as if the fault had not been present.
- Any assistance or extra time given to candidates must be recorded in the supervisor's report.

© UCLES 2024

[Turn over

www.dynamicpapers.com

Materials and apparatus for Question 1 (per set of apparatus unless otherwise specified)

- Two stands each of approximate height 65 cm.
- Boss.
- Two G-clamps suitable for clamping the bases of the stands to the bench.
- 85 cm length of strong thread with a small loop tied at each end.
- Pulley with hook for attaching a load (e.g. www.betterequipped.co.uk item 2192).
- Pulley that can be attached to a stand.
- Rubber band of approximate circumference 10 cm.
- Two 100 g mass hangers. Both should have their mass value covered. One should be labelled M and the other labelled Q.
- Four 10 g slotted masses and four 50 g slotted masses with their mass values clearly shown. See Note 1.
- Flat-headed round nail with approximate length 50 mm and approximate diameter 2 mm. It must be possible to clamp the nail securely in the boss.
- Plumb line of approximate length 20 cm with a small loop tied at the free end.
- 180° protractor with 1° divisions.
- Metre rule with a millimetre scale.

Notes

1 It must be possible to fit all the slotted masses onto either mass hanger.

2 The apparatus should be laid out on the bench. If the apparatus is to be used by another candidate, then it should be restored to its original state.

© UCLES 2024

www.dynamicpapers.com

Materials and apparatus for Question 2 (per set of apparatus unless otherwise specified)

- Wooden board with approximate dimensions 8 cm × 14 cm and approximate thickness 2 cm. See Note 1.
- Flat-headed round nail of length 10 cm and diameter 4.5 mm (e.g. screwfix.com item 16534). See Note 1.
- Rigid plastic tube of length 10.5 cm and approximate internal diameter 6 mm. It must be able to spin freely on the nail. The casing of a ballpoint pen with the narrower end section cut off would be suitable (e.g. BIC Cristal Original ballpoint pen). See Note 2.
- 70 cm length of strong thread. See Note 2.
- Pulley suitable for fixing to the edge of a bench.
- Approximately 1 g of adhesive putty (e.g. Blu-Tack).
- Piece of stiff card (e.g. 0.8 mm thickness) of length 9.7 cm and width 3.8 cm, labelled A.
- Piece of stiff card (e.g. 0.8 mm thickness) of length 15.2 cm and width 4.4 cm, labelled B.
- G-clamp suitable for clamping the wooden board to the bench.
- 10 g mass hanger with a 10 g slotted mass. This combination should be taped together and labelled P.
- Steel washer with inside diameter 6 mm and minimum outside diameter 15 mm.
- 180° protractor with 1° divisions.
- Stop-watch reading to 0.1 s or better.
- 30 cm ruler with a millimetre scale.
- Small container for the adhesive putty.

Notes

1 Drill a hole of diameter 4.5 mm through the wooden board at the position shown in Fig. 2.1. Hammer the nail through the hole up to its head.

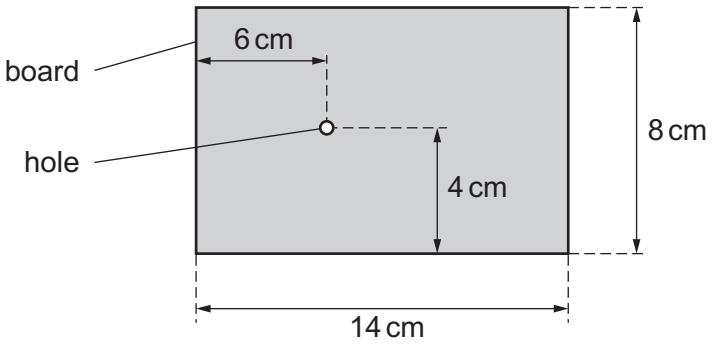

Fig. 2.1 (not to scale)

© UCLES 2024

[Turn over

www.dynamicpapers.com

2 Make a saw cut of approximate width 1.0 mm down one end of the plastic tube, as shown in Fig. 2.2.

Tie the thread tightly around the tube and cover the knot with a small piece of adhesive tape (e.g. Sellotape), as shown in Fig. 2.2.

Tie a loop of approximate circumference 2 cm at the other end of the thread, as shown in Fig. 2.2.

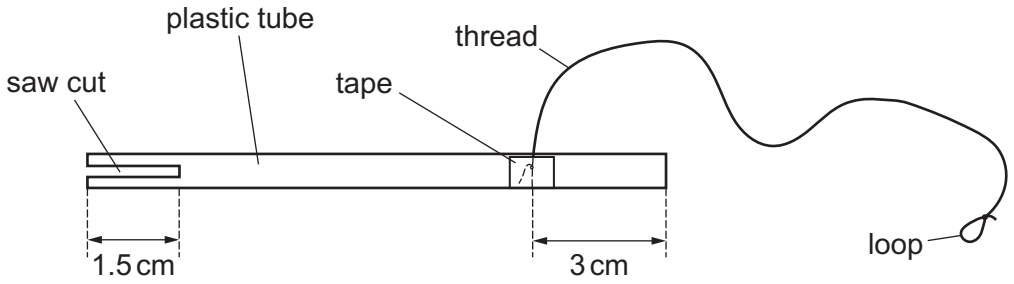

Fig. 2.2 (not to scale)

3 The apparatus should be laid out on the bench. If the apparatus is to be used by another candidate, then it should be restored to its original state. All the adhesive putty should be returned to its container.

Permission to reproduce items where third-party owned material protected by copyright is included has been sought and cleared where possible. Every reasonable effort has been made by the publisher (UCLES) to trace copyright holders, but if any items requiring clearance have unwittingly been included, the publisher will be pleased to make amends at the earliest possible opportunity.

To avoid the issue of disclosure of answer-related information to candidates, all copyright acknowledgements are reproduced online in the Cambridge Assessment International Education Copyright Acknowledgements Booklet. This is produced for each series of examinations and is freely available to download at www.cambridgeinternational.org after the live examination series.

Cambridge Assessment International Education is part of Cambridge Assessment. Cambridge Assessment is the brand name of the University of Cambridge Local Examinations Syndicate (UCLES), which is a department of the University of Cambridge.

© UCLES 2024

www.dynamicpapers.com

Supervisor's report

Syllabus and component number | | | | | / | | |

Centre number | | | | | |

Centre name .....

Time of the practical session .....

Laboratory name/number .....

Give details of any difficulties experienced by the centre or by candidates (include the relevant candidate names and candidate numbers).

You must include:
- any difficulties experienced by the centre in the preparation of materials
- any difficulties experienced by candidates, e.g. due to faulty materials or apparatus
- any specific assistance given to candidates.

© UCLES 2024

[Turn over

www.dynamicpapers.com

Declaration

1 Each packet that I am returning to Cambridge International contains all of the following items:
- the scripts of the candidates specified on the bar code label provided
- the supervisor's results relevant to these candidates
- the supervisor's reports relevant to these candidates
- seating plans for each practical session, referring to each candidate by candidate number
- the attendance register.

2 Where the practical exam has taken place in more than one practical session, I have clearly labelled the supervisor's results, supervisor's reports and seating plans with the time and laboratory name/number for each practical session.

3 I have included details of difficulties relating to each practical session experienced by the centre or by candidates.

4 I have reported any other adverse circumstances affecting candidates, e.g. illness, bereavement or temporary injury, directly to Cambridge International on a *special consideration form*.

Signed ..... (supervisor)

Name (in block capitals) .....

© UCLES 2024