www.dynamicpapers.com

Cambridge Assessment International Education

Cambridge International AS & A Level

CANDIDATE NAME	

CENTRE NUMBER						CANDIDATE NUMBER				

PHYSICS **9702/35**

Paper 3 Advanced Practical Skills 1 **May/June 2023**

2 hours

You must answer on the question paper.

You will need: The materials and apparatus listed in the confidential instructions

INSTRUCTIONS

- Answer **all** questions.
- Use a black or dark blue pen. You may use an HB pencil for any diagrams or graphs.
- Write your name, centre number and candidate number in the boxes at the top of the page.
- Write your answer to each question in the space provided.
- Do **not** use an erasable pen or correction fluid.
- Do **not** write on any bar codes.
- You will be allowed to work with the apparatus for a maximum of 1 hour for each question.
- You should record all your observations in the spaces provided in the question paper as soon as these observations are made.
- You may use a calculator.
- You should show all your working and use appropriate units.

INFORMATION

- The total mark for this paper is 40.
- The number of marks for each question or part question is shown in brackets [ ].

For Examiner's Use	
1	
2	
Total	

This document has **16** pages. Any blank pages are indicated.

DC (CJ/SG) 313461/3
© UCLES 2023

www.dynamicpapers.com

You may not need to use all of the materials provided.

1 In this experiment, you will investigate an electrical circuit.

You have been provided with a metre rule with a wire attached.

(a) ● Set up the circuit shown in Fig. 1.1.

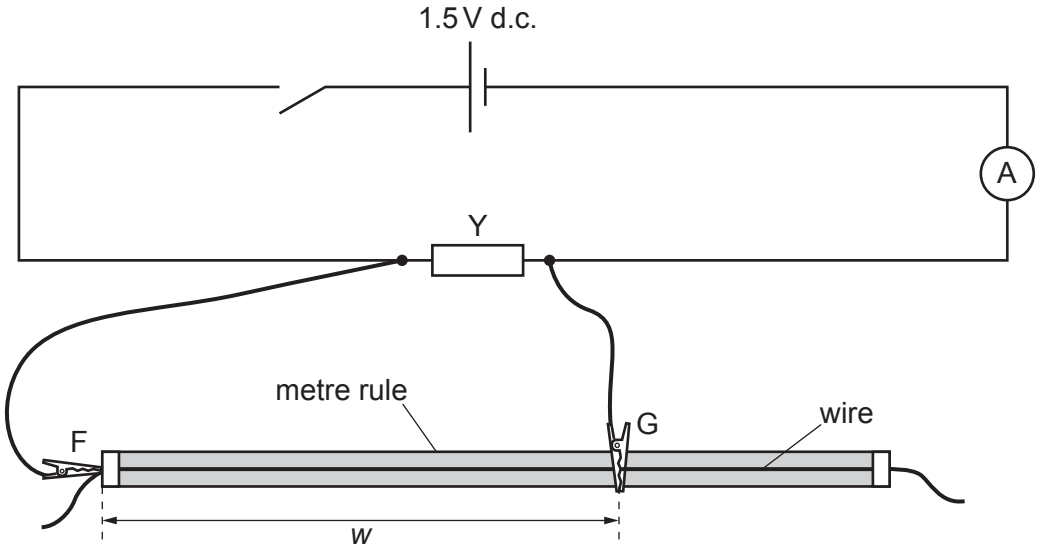

Fig. 1.1

- F and G are crocodile clips.

  The distance between F and G is *w*. Attach G to the wire so that *w* is approximately 70 cm.

- Close the switch.

- Record the value of *w* and the ammeter reading I_1.

w = ...

I_1 = ...

- Open the switch.

[1]

© UCLES 2023

www.dynamicpapers.com

(b) ● Keep F and G in the **same** positions so that the value of *w* remains the **same**.

● Change some of the connecting leads to set up the circuit shown in Fig. 1.2.

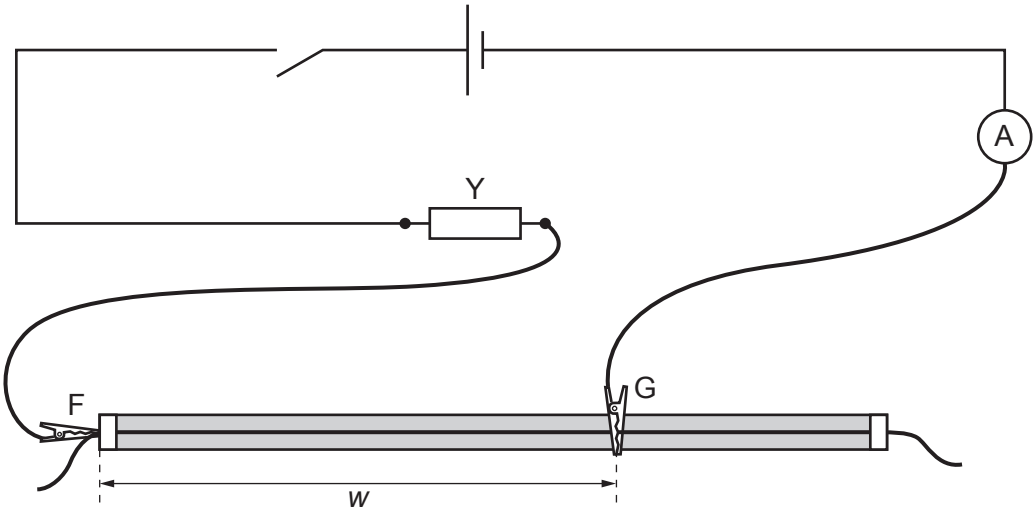

Fig. 1.2

● Close the switch.

● Record the ammeter reading I_2.

I_2 = ...

● Open the switch.

● Calculate $I_1 I_2$.

$I_1 I_2$ = ...
[1]

www.dynamicpapers.com

(c) Using values of w greater than 55 cm, change w by placing G at different positions on the wire and record I_1 and I_2.

Repeat until you have six sets of readings of w, I_1 and I_2. Include your values from **(a)** and **(b)**.

Record your results in a table. Include values of $I_1 I_2$ and $\frac{1}{w}$ in your table.

[10]

(d) (i) Plot a graph of $I_1 I_2$ on the y-axis against $\frac{1}{w}$ on the x-axis. [3]

(ii) Draw the straight line of best fit. [1]

(iii) Determine the gradient and y-intercept of this line.

gradient = ...

y-intercept = ...

[2]

© UCLES 2023

www.dynamicpapers.com

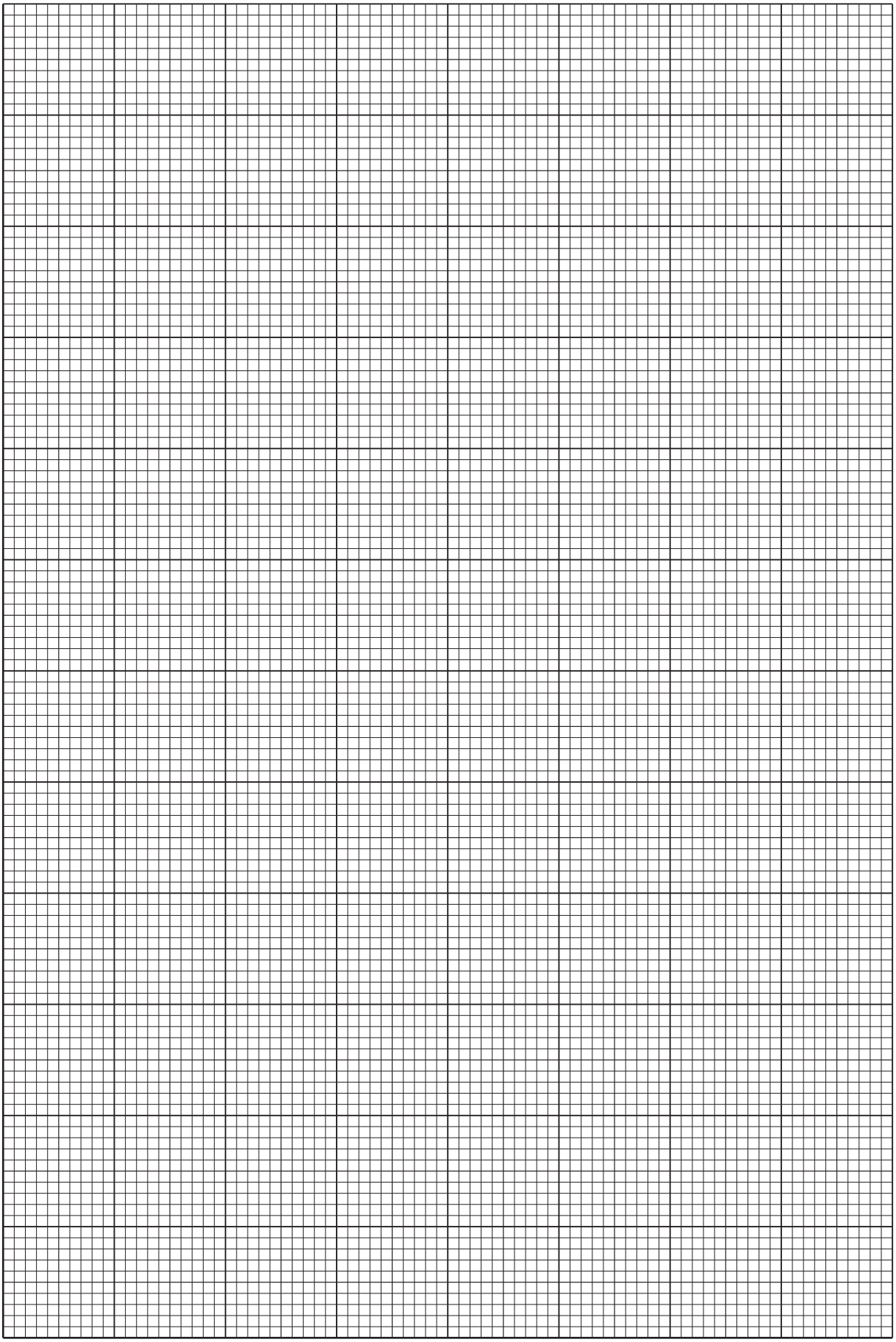

© UCLES 2023

www.dynamicpapers.com

(e) It is suggested that the quantities I_1, I_2 and w are related by the equation

$$I_1 I_2 = \frac{P}{w} + Q$$

where P and Q are constants.

Using your answers in **(d)(iii)**, determine values for P and Q.
Give appropriate units.

P = ...

Q = ...
[2]

[Total: 20]

© UCLES 2023

www.dynamicpapers.com

BLANK PAGE

www.dynamicpapers.com

You may not need to use all of the materials provided.

2 In this experiment, you will investigate the oscillations of a pendulum.

You have been provided with two cylinders A and B.

(a) (i) The diameter of cylinder A is *D*, as shown in Fig. 2.1.

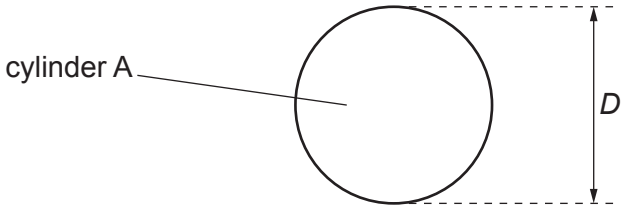

Fig. 2.1

Measure and record *D*.

D = ... [1]

(ii) Estimate the percentage uncertainty in your value of *D*. Show your working.

percentage uncertainty = ... % [1]

© UCLES 2023

www.dynamicpapers.com

(b) ● Set up the pendulum as shown in Fig. 2.2.

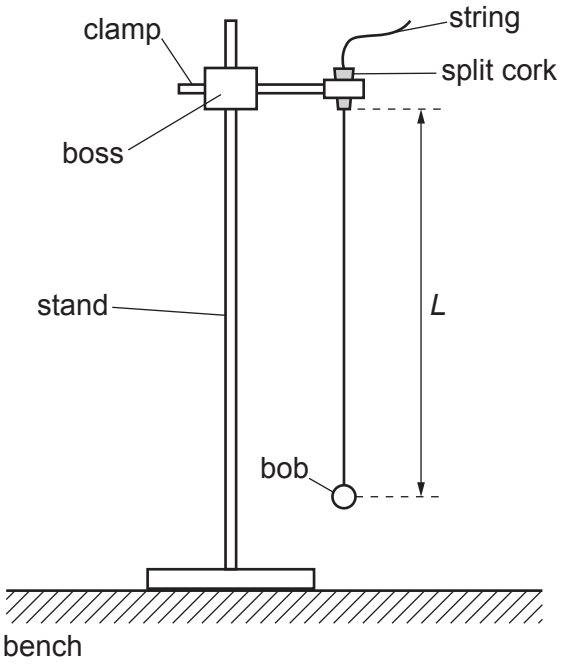

Fig. 2.2

● The distance between the bottom of the split cork and the centre of the bob is L.

Adjust the position of the string in the split cork until the value of L is approximately 50 cm.

● Measure and record L.

L = ...

● Move the bob through a short distance.

● Release the bob. The bob will oscillate.

● Determine the period T_1 of the oscillations of the bob.

T_1 = ...
[2]

www.dynamicpapers.com

(c) (i) ● Use adhesive putty to attach the string to cylinder A as shown in Fig. 2.3.

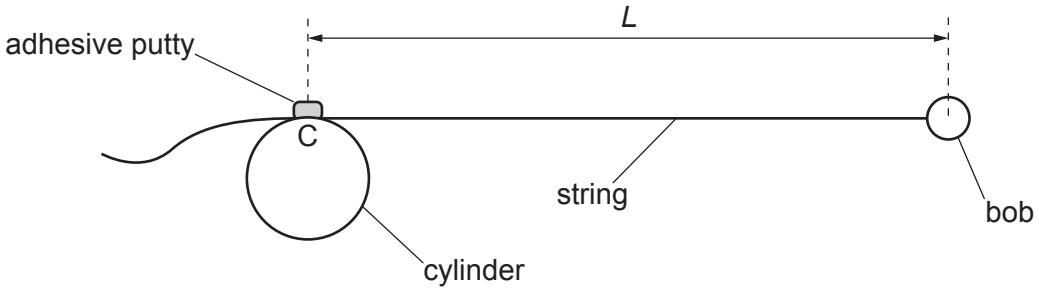

Fig. 2.3

● C is the point at which the string is attached to the cylinder.

Adjust the position of the adhesive putty until the distance between C and the centre of the bob is equal to your value of *L* from **(b)**.

● Set up the apparatus as shown in Fig. 2.4.

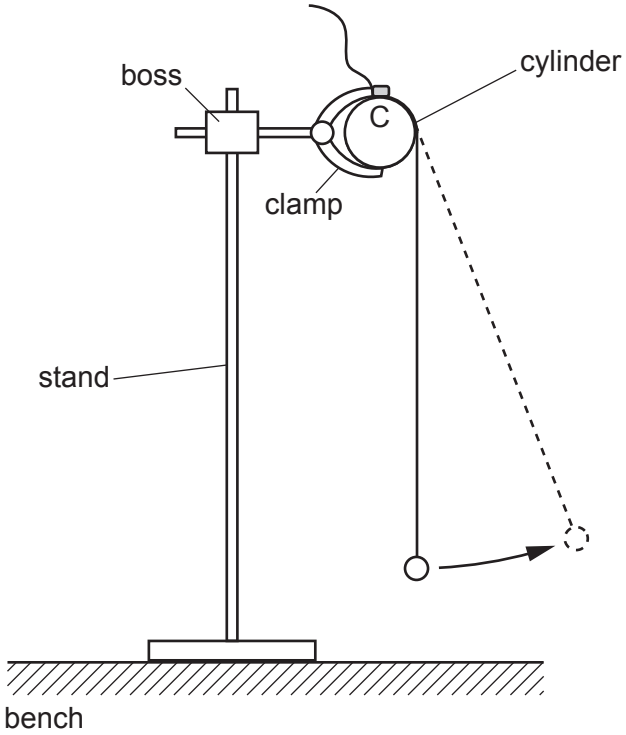

Fig. 2.4

© UCLES 2023

www.dynamicpapers.com

- Move the bob a short distance **away** from the stand, as shown in Fig. 2.4.
- Release the bob. The bob will oscillate.
- Determine the period T_2 of the oscillations of the bob.

T_2 = ... [1]

(ii) Calculate $(T_1 - T_2)$.

$(T_1 - T_2)$ = ... [1]

(d) Using cylinder B and a value of L of approximately 40 cm, repeat **(a)(i)**, **(b)** and **(c)**.

D = ...

L = ...

T_1 = ...

T_2 = ...

$(T_1 - T_2)$ = ...
[3]

www.dynamicpapers.com

(e) It is suggested that the relationship between T_1, T_2, D and L is

$$(T_1 - T_2) = \frac{kD}{L}$$

where k is a constant.

(i) Using your data, calculate two values of k.

first value of k = ...

second value of k = ...
[1]

(ii) Justify the number of significant figures that you have given for your values of k.

.....

.....

..... [1]

(f) It is suggested that the percentage uncertainty in the values of k is 10%.

Using this uncertainty, explain whether your results support the relationship in **(e)**.

.....

.....

.....

..... [1]

© UCLES 2023

www.dynamicpapers.com

(g) (i) Describe **four** sources of uncertainty or limitations of the procedure for this experiment.

For any uncertainties in measurement that you describe, you should state the quantity being measured and a reason for the uncertainty.

1 .....

.....

2 .....

.....

3 .....

.....

4 .....

.....

[4]

(ii) Describe **four** improvements that could be made to this experiment. You may suggest the use of other apparatus or different procedures.

1 .....

.....

2 .....

.....

3 .....

.....

4 .....

.....

[4]

[Total: 20]

© UCLES 2023

www.dynamicpapers.com

BLANK PAGE

© UCLES 2023

www.dynamicpapers.com

BLANK PAGE

© UCLES 2023

www.dynamicpapers.com

BLANK PAGE

Permission to reproduce items where third-party owned material protected by copyright is included has been sought and cleared where possible. Every reasonable effort has been made by the publisher (UCLES) to trace copyright holders, but if any items requiring clearance have unwittingly been included, the publisher will be pleased to make amends at the earliest possible opportunity.

To avoid the issue of disclosure of answer-related information to candidates, all copyright acknowledgements are reproduced online in the Cambridge Assessment International Education Copyright Acknowledgements Booklet. This is produced for each series of examinations and is freely available to download at www.cambridgeinternational.org after the live examination series.

Cambridge Assessment International Education is part of Cambridge Assessment. Cambridge Assessment is the brand name of the University of Cambridge Local Examinations Syndicate (UCLES), which is a department of the University of Cambridge.

© UCLES 2023