www.dynamicpapers.com

Cambridge Assessment International Education

# Cambridge International AS & A Level

| | |
|---|---|
| CANDIDATE NAME | |
| CENTRE NUMBER | |
| CANDIDATE NUMBER | |

*1319707073*

**PHYSICS** **9702/34**

Paper 3 Advanced Practical Skills 2 **May/June 2022**

**2 hours**

You must answer on the question paper.

You will need: The materials and apparatus listed in the confidential instructions

**INSTRUCTIONS**

- Answer **all** questions.
- Use a black or dark blue pen. You may use an HB pencil for any diagrams or graphs.
- Write your name, centre number and candidate number in the boxes at the top of the page.
- Write your answer to each question in the space provided.
- Do **not** use an erasable pen or correction fluid.
- Do **not** write on any bar codes.
- You will be allowed to work with the apparatus for a maximum of 1 hour for each question.
- You should record all your observations in the spaces provided in the question paper as soon as these observations are made.
- You may use a calculator.
- You should show all your working and use appropriate units.

**INFORMATION**

- The total mark for this paper is 40.
- The number of marks for each question or part question is shown in brackets [ ].

| For Examiner's Use | |
|---|---|
| 1 | |
| 2 | |
| Total | |

This document has **12** pages. Any blank pages are indicated.


© UCLES 2022

www.dynamicpapers.com



**You may not need to use all of the materials provided.**

**1** In this experiment you will investigate an electrical circuit.

**(a)** You have been provided with the circuit shown in Fig. 1.1.

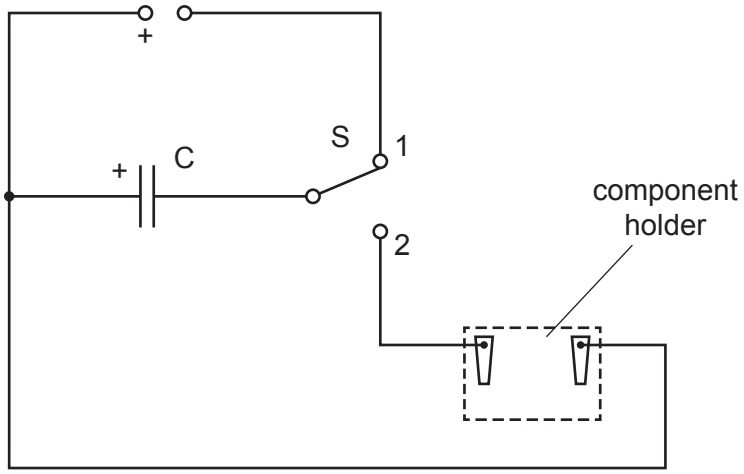


**Fig. 1.1**

- Connect the voltmeter in parallel with component C, as shown in Fig. 1.2.

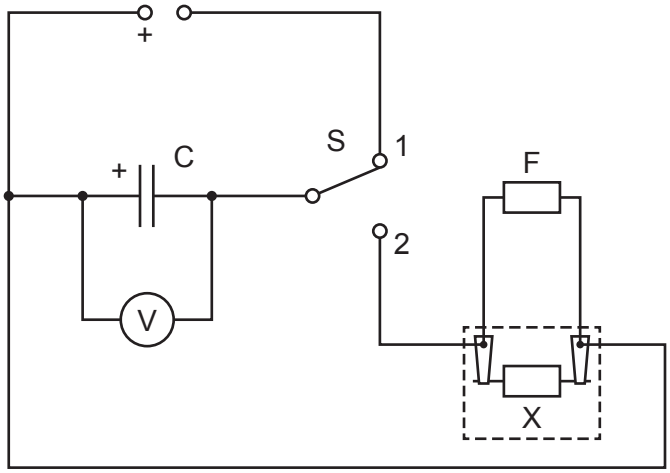


**Fig. 1.2**

- Connect the resistor labelled F in parallel with the component holder, as shown in Fig. 1.2.

- Connect one of the labelled resistors into the component holder as resistor X, as shown in Fig. 1.2. Record the resistance *R* of resistor X.

*R* = .....

© UCLES 2022

www.dynamicpapers.com



- Switch on the power supply.
- Move S to position 1.
- Record the voltmeter reading $V$.

$V$ = ..... [1]

**(b)**
- Ensure S is at position 1.
- Move S to position 2 and start the stop-watch. The voltmeter reading will gradually decrease.
- Stop the stop-watch when the voltmeter reading passes 0.8 V.
- Record the time $t$ shown by the stop-watch.

$t$ = .....

- Move S to position 1.

[2]

www.dynamicpapers.com



**(c)** Change X and repeat **(b)** until you have six sets of values of $R$ and $t$.

Record your results in a table. Include values of $\frac{1}{R}$ and $\frac{1}{t}$ in your table.

[9]

**(d)** **(i)** Plot a graph of $\frac{1}{t}$ on the $y$-axis against $\frac{1}{R}$ on the $x$-axis. [3]

**(ii)** Draw the straight line of best fit. [1]

**(iii)** Determine the gradient and $y$-intercept of this line.

gradient = .....

$y$-intercept = .....

[2]

© UCLES 2022

www.dynamicpapers.com



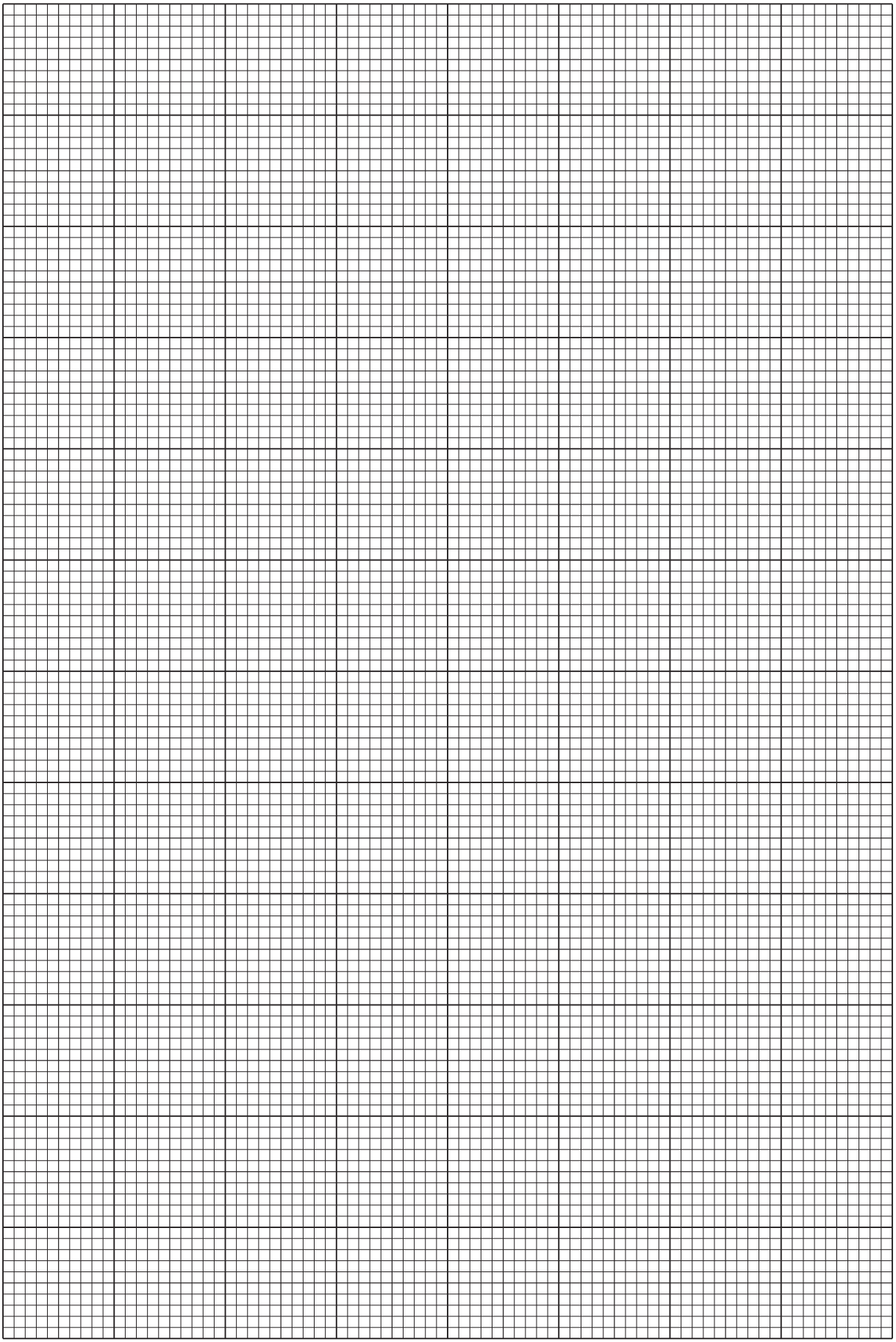

© UCLES 2022

www.dynamicpapers.com



**(e)** It is suggested that the quantities $t$ and $R$ are related by the equation

$$\frac{1}{t} = \frac{a}{R} + b$$

where $a$ and $b$ are constants.

Use your answers in **(d)(iii)** to determine the values of $a$ and $b$.
Give appropriate units.

$a$ = .....

$b$ = .....
[2]

[Total: 20]

www.dynamicpapers.com



**You may not need to use all of the materials provided.**

**2** In this experiment, you will compare some of the properties of two liquids.

**(a)** You are provided with a block of transparent material with a string loop attached to its rear face, as shown in Fig. 2.1.

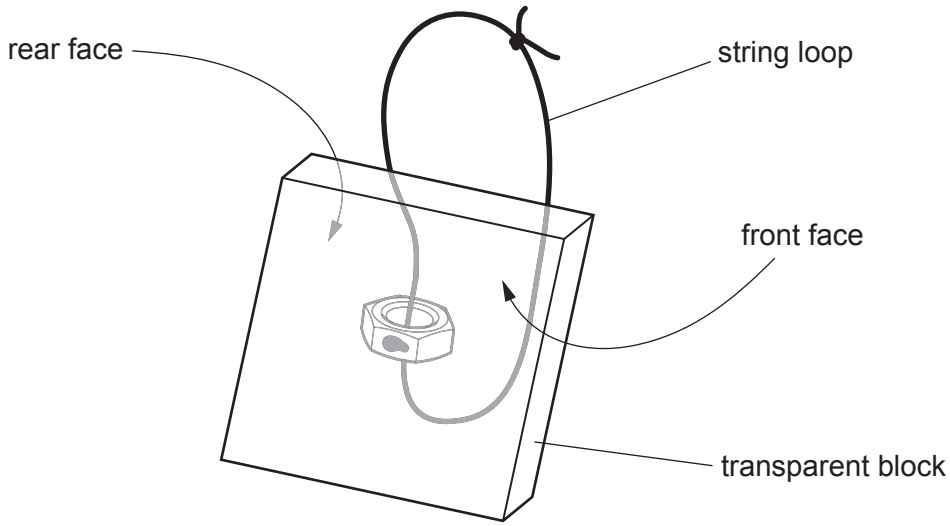


**Fig. 2.1**

- Hook the newton meter through the string loop.
- Record the weight *W* of the block shown by the newton meter.

*W* = ..... N [1]

www.dynamicpapers.com



**(b) (i)**

- Place the large transparent plate flat on the bench.
- Use the beaker labelled WATER and its pipette to make a pool of water of approximate diameter 5 cm near the centre of the large plate.
- Place the front face of the transparent block on the pool of water. There should be a film of water over the whole of the front face of the block, as shown in Fig. 2.2.
- Hold the large plate down on the bench.
- Hook the newton meter through the string loop and slowly pull up vertically on the block.

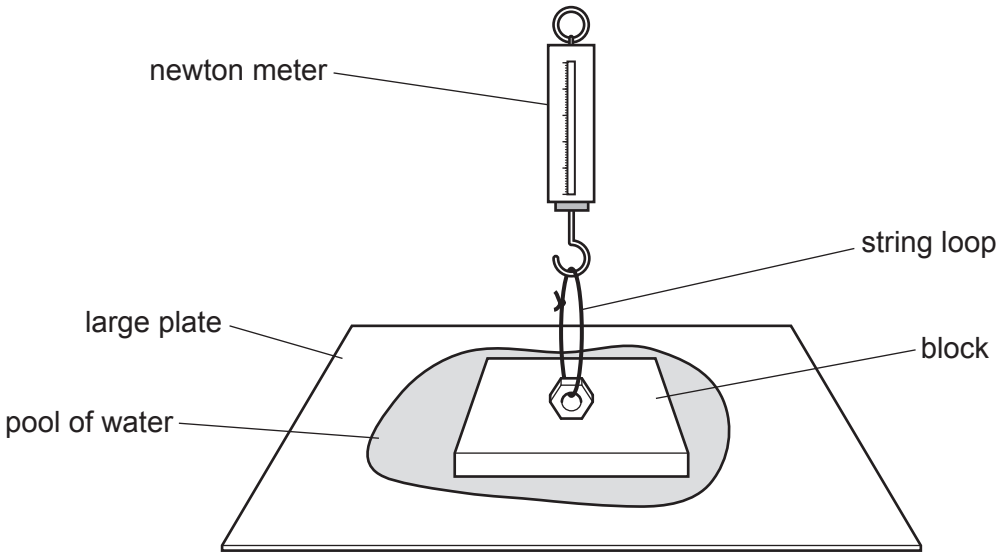


**Fig. 2.2**

- Record the newton meter reading *F* at the moment the block is detached from the plate.

*F* = ..... N [2]

**(ii)** Estimate the percentage uncertainty in your value of *F*. Show your working.

percentage uncertainty = .....% [1]

**(iii)** Calculate *E* using $E = F - W$.

*E* = ..... N [1]

© UCLES 2022

www.dynamicpapers.com



**(c)** • Use the stand, boss and clamp to position the syringe body above the beaker of water, as shown in Fig. 2.3.

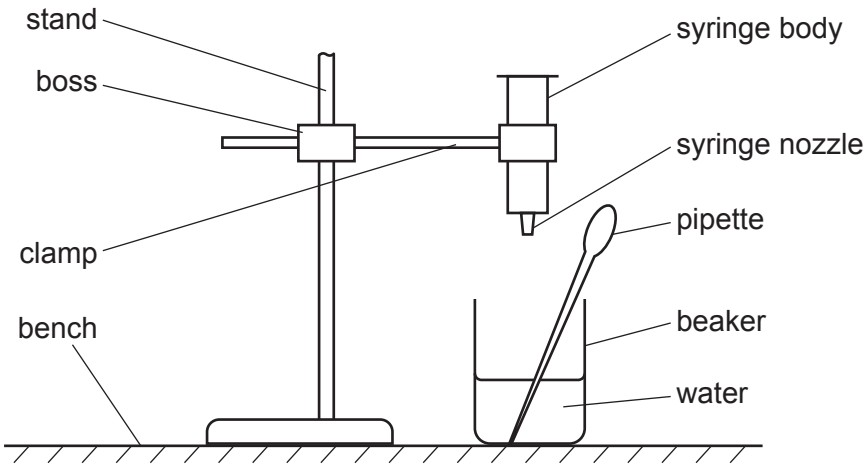


**Fig. 2.3**

- Cover the nozzle with a finger.
- Use the pipette to fill the syringe with water until the level is above the 10 $cm^3$ mark.
- Uncover the nozzle and start the stop-watch when the level passes the 10 $cm^3$ mark.
- Stop the stop-watch when the level passes the 1 $cm^3$ mark.
- Record the stop-watch reading *T*.

*T* = ..... s [2]

**(d)** • Use paper towels to dry the water from the large plate, the block and the syringe body.

- Repeat **(b)(i)**, **(b)(iii)** and **(c)** with oil, using the beaker labelled OIL and its pipette.

*F* = ..... N

*E* = ..... N

*T* = ..... s
[2]

© UCLES 2022



**[Turn over**

www.dynamicpapers.com



**(e)** It is suggested that the relationship between $E$ and $T$ is

$$kE^2 = T$$

where $k$ is a constant.

**(i)** Using your data, calculate two values of $k$.

first value of $k$ = .....

second value of $k$ = .....
[1]

**(ii)** Justify the number of significant figures that you have given for your values of $k$.

.....

.....

..... [1]

**(f)** It is suggested that the percentage uncertainty in the values of $k$ is 40%.

Using this uncertainty, explain whether your results support the relationship in **(e)**.

.....

.....

.....

..... [1]

© UCLES 2022

www.dynamicpapers.com



**(g) (i)** Describe **four** sources of uncertainty or limitations of the procedure for this experiment.

For any uncertainties in measurement that you describe, you should state the quantity being measured and a reason for the uncertainty.

1 .....

.....

2 .....

.....

3 .....

.....

4 .....

.....

[4]

**(ii)** Describe **four** improvements that could be made to this experiment. You may suggest the use of other apparatus or different procedures.

1 .....

.....

2 .....

.....

3 .....

.....

4 .....

.....

[4]

[Total: 20]

© UCLES 2022

www.dynamicpapers.com



**BLANK PAGE**

Permission to reproduce items where third-party owned material protected by copyright is included has been sought and cleared where possible. Every reasonable effort has been made by the publisher (UCLES) to trace copyright holders, but if any items requiring clearance have unwittingly been included, the publisher will be pleased to make amends at the earliest possible opportunity.

To avoid the issue of disclosure of answer-related information to candidates, all copyright acknowledgements are reproduced online in the Cambridge Assessment International Education Copyright Acknowledgements Booklet. This is produced for each series of examinations and is freely available to download at www.cambridgeinternational.org after the live examination series.

Cambridge Assessment International Education is part of Cambridge Assessment. Cambridge Assessment is the brand name of the University of Cambridge Local Examinations Syndicate (UCLES), which is a department of the University of Cambridge.

© UCLES 2022