www.dynamicpapers.com

Cambridge Assessment International Education

Cambridge International AS & A Level

CANDIDATE NAME

CENTRE NUMBER

CANDIDATE NUMBER

6242748188

PHYSICS **9702/35**

Paper 3 Advanced Practical Skills 1 **May/June 2020**

2 hours

You must answer on the question paper.

You will need: The materials and apparatus listed in the confidential instructions

INSTRUCTIONS

- Answer **all** questions.
- Use a black or dark blue pen. You may use an HB pencil for any diagrams or graphs.
- Write your name, centre number and candidate number in the boxes at the top of the page.
- Write your answer to each question in the space provided.
- Do **not** use an erasable pen or correction fluid.
- Do **not** write on any bar codes.
- You will be allowed to work with the apparatus for a maximum of 1 hour for each question.
- You should record all your observations in the spaces provided in the question paper as soon as these observations are made.
- You may use a calculator.
- You should show all your working and use appropriate units.

INFORMATION

- The total mark for this paper is 40.
- The number of marks for each question or part question is shown in brackets [ ].

For Examiner's Use	
1	
2	
Total	

This document has **12** pages. Blank pages are indicated.

© UCLES 2020

[Turn over

www.dynamicpapers.com

You may not need to use all of the materials provided.

1 In this experiment, you will investigate the motion of a spring and a mass.

(a) ● Set up the apparatus as shown in Fig. 1.1.

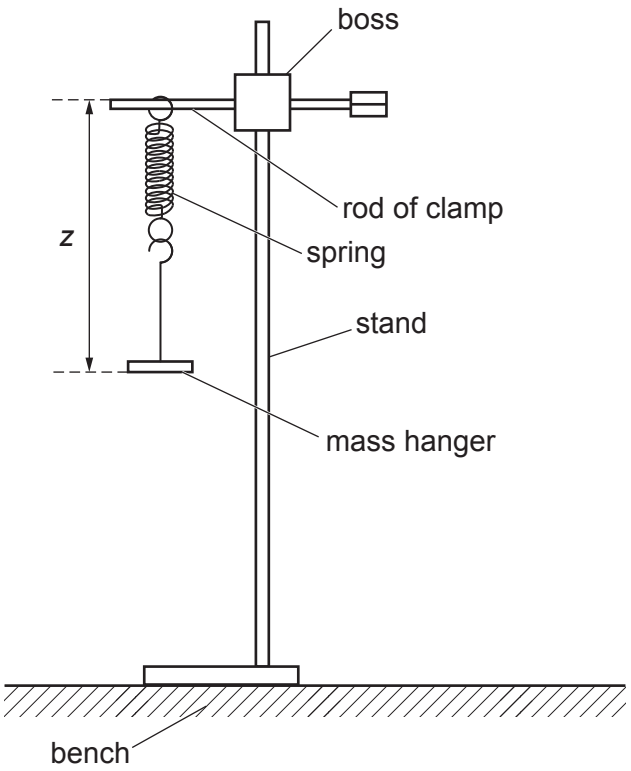

Fig. 1.1

● The distance between the top of the rod of the clamp and the bottom of the mass hanger is *z*, as shown in Fig. 1.1.

Measure and record *z*.

z = ...

● Add mass *m* to the mass hanger where *m* = 0.300 kg. Gently lower the mass to stretch the spring.

● Record the total **added** mass *m* (do not include the mass of the hanger).

m = ... kg

© UCLES 2020

www.dynamicpapers.com

- Pull the bottom of the mass hanger **horizontally** through a short distance.
- Release the mass hanger. The mass hanger and masses will oscillate as shown in Fig. 1.2.

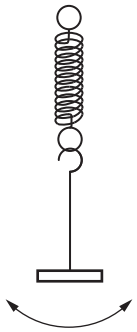

Fig. 1.2

- Determine the period T of these oscillations.

T = ... s
[1]

www.dynamicpapers.com

(b) By changing the total mass added to the mass hanger, vary m. Measure T and repeat until you have six sets of values of m and T. Include your values from **(a)**. Do **not** use $m = 0$.

Record your results in a table. Include values of $\frac{T^2}{m}$ and $\frac{1}{m}$ in your table.

[10]

(c) **(i)** Plot a graph of $\frac{T^2}{m}$ on the y-axis against $\frac{1}{m}$ on the x-axis. [3]

(ii) Draw the straight line of best fit. [1]

(iii) Determine the gradient and y-intercept of this line.

gradient = ...

y-intercept = ...

[2]

© UCLES 2020

www.dynamicpapers.com

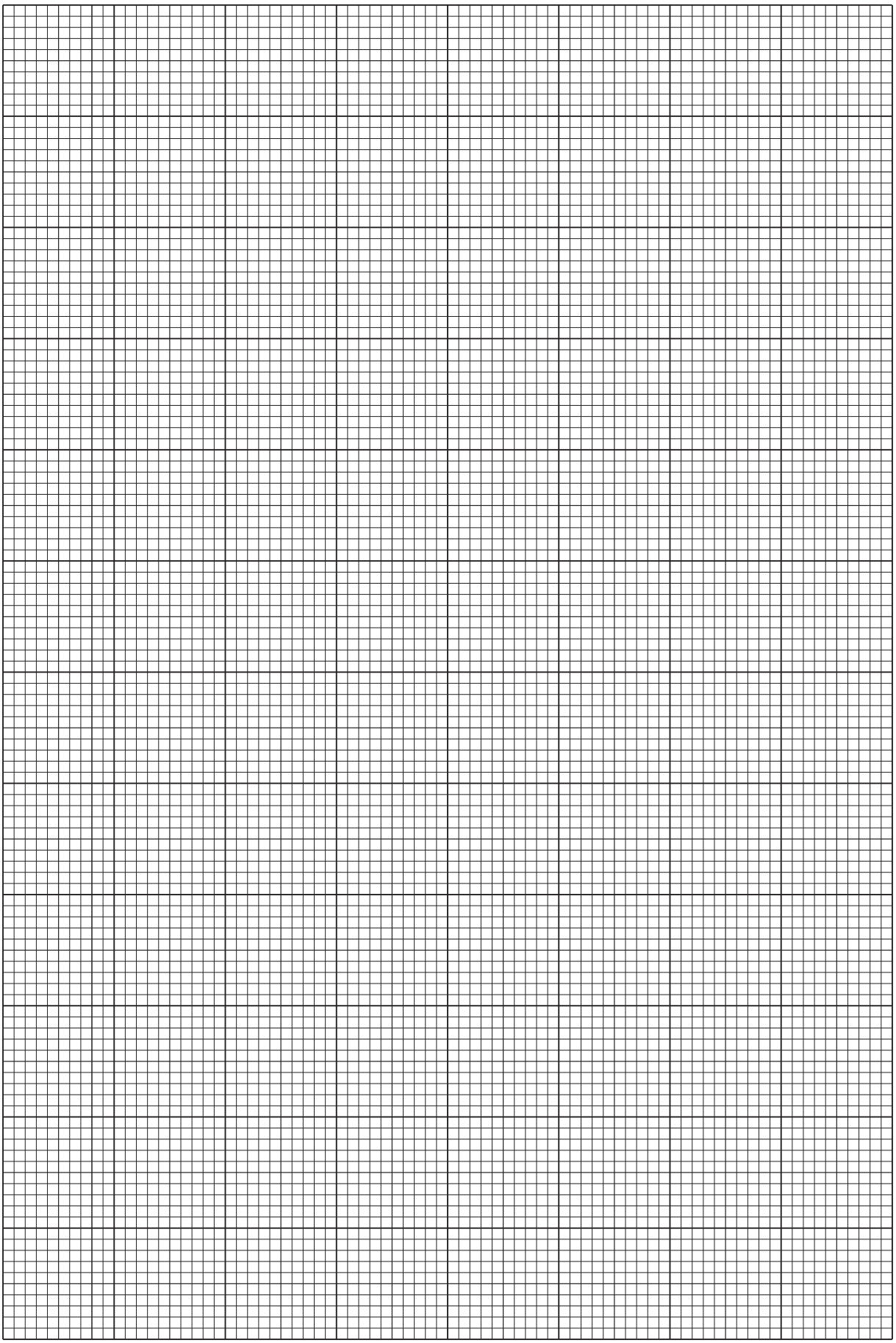

© UCLES 2020

www.dynamicpapers.com

(d) It is suggested that the quantities T and m are related by the equation

$$\frac{T^2}{m} = \frac{A}{m} + B$$

where A and B are constants.

Using your answers in **(c)(iii)**, determine the values of A and B.
Give appropriate units.

A = ...

B = ...
[2]

(e) A student repeats the experiment using two springs in series, as shown in Fig. 1.3.

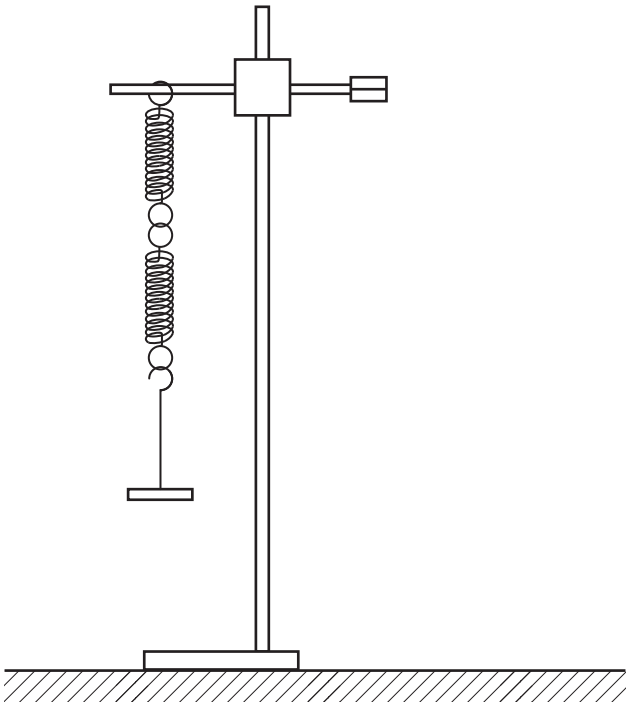

Fig. 1.3

Using two springs connected in series halves the value of the spring constant of the system.

Theory suggests that A is proportional to z and that B is inversely proportional to the spring constant of the system.

For this experiment, draw a second line on the graph to show the expected results.
Label this line W.

[1]

[Total: 20]

© UCLES 2020

www.dynamicpapers.com

You may not need to use all of the materials provided.

2 In this experiment, you will investigate a potential divider circuit.

(a) (i) ● Connect the voltmeter across the cell as shown in Fig. 2.1.

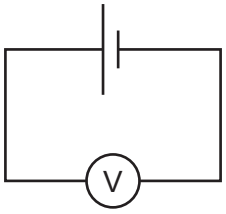

Fig. 2.1

● The reading on the voltmeter is the electromotive force (e.m.f.) E of the cell.

Record E.

E = ...

● Measure and record the diameter d of wire A.

d = ...
[1]

(ii) Calculate Ed^2.

Ed^2 = ... [1]

(iii) Justify the number of significant figures that you have given for your value of Ed^2.

.....

.....

..... [1]

© UCLES 2020

[Turn over

www.dynamicpapers.com

(b) (i) You have been provided with a wooden strip with some wire connected between two nails.

- Set up the circuit shown in Fig. 2.2.

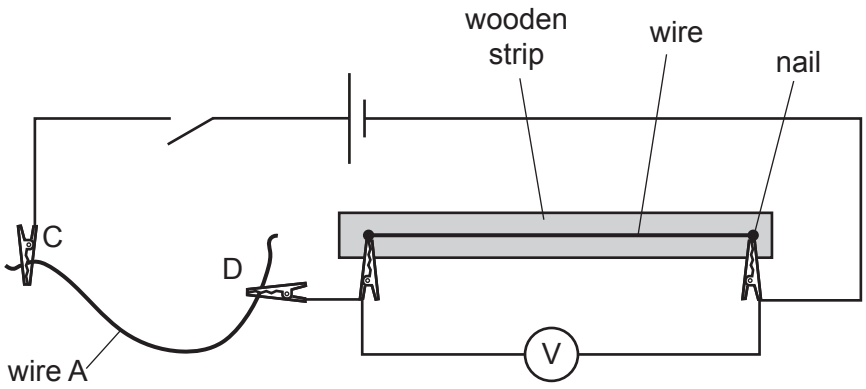

Fig. 2.2

- C and D are crocodile clips.

  Place the clips on wire A so that the length *L* of wire between C and D is equal to the length of wire between the two nails.

- Measure and record *L*.

L = ... [1]

(ii) Estimate the percentage uncertainty in your value of *L*. Show your working.

percentage uncertainty = ... [1]

© UCLES 2020

www.dynamicpapers.com

(c) ● Close the switch.

● Record the voltmeter reading V.

V = ...

● Open the switch.

● Remove the wire between C and D.

[1]

(d) ● Measure and record the diameter d of wire B.

d = ...

● Calculate Ed^2.

Ed^2 = ...

● Connect length L of wire B between C and D and repeat **(c)**.

V = ...

[3]

www.dynamicpapers.com

(e) It is suggested that the relationship between V, E and d is

$$\frac{1}{V} = \frac{k}{Ed^2} + \frac{1}{E}$$

where k is a constant.

(i) Using your data, calculate two values of k.

first value of k = ...

second value of k = ...
[1]

(ii) Explain whether your results support the suggested relationship.

.....

.....

.....

..... [1]

(f) Theory suggests that

$$k = D^2$$

where D is the diameter of the wire on the wooden strip.

Use your second value of k to calculate a value for D.

D = ... [1]

© UCLES 2020

www.dynamicpapers.com

(g) (i) Describe four sources of uncertainty or limitations of the procedure for this experiment.

1. .....

.....

2. .....

.....

3. .....

.....

4. .....

.....

[4]

(ii) Describe four improvements that could be made to this experiment. You may suggest the use of other apparatus or different procedures.

1. .....

.....

2. .....

.....

3. .....

.....

4. .....

.....

[4]

[Total: 20]

© UCLES 2020

www.dynamicpapers.com

BLANK PAGE

Permission to reproduce items where third-party owned material protected by copyright is included has been sought and cleared where possible. Every reasonable effort has been made by the publisher (UCLES) to trace copyright holders, but if any items requiring clearance have unwittingly been included, the publisher will be pleased to make amends at the earliest possible opportunity.

To avoid the issue of disclosure of answer-related information to candidates, all copyright acknowledgements are reproduced online in the Cambridge Assessment International Education Copyright Acknowledgements Booklet. This is produced for each series of examinations and is freely available to download at www.cambridgeinternational.org after the live examination series.

Cambridge Assessment International Education is part of the Cambridge Assessment Group. Cambridge Assessment is the brand name of the University of Cambridge Local Examinations Syndicate (UCLES), which itself is a department of the University of Cambridge.

© UCLES 2020