www.dynamicpapers.com

PHYSICS

Paper 9702/12
Multiple Choice

Question Number	Key	Question Number	Key	Question Number	Key	Question Number	Key
1	C	11	C	21	A	31	A
2	B	12	B	22	A	32	B
3	A	13	D	23	D	33	B
4	B	14	D	24	B	34	A
5	B	15	B	25	C	35	B
6	D	16	C	26	D	36	A
7	D	17	B	27	B	37	C
8	C	18	C	28	C	38	C
9	D	19	B	29	A	39	A
10	C	20	D	30	D	40	A

General comments

Candidates should always read each question through in its entirety before looking at the four possible answers. They should take particular care when, for instance, a question asks which statement is **not** correct. All four answer options should be considered carefully, trying to justify eliminating three of the options as a check to make sure the answer selected is the correct one.

When answering numerical questions, it is a good idea to try to calculate the answer before looking at the answer options. Candidates need to ensure that the units used in any calculation are consistent, particularly if the information includes prefixes such as k, μ or M, or data which includes areas in mm^2 or cm^2 or volumes in mm^3 or cm^3.

Candidates found **Questions 3**, **4**, **6**, **24** and **34** difficult. They found **Questions 22**, **27**, **31**, **39** and **40** relatively straightforward.

Comments on specific questions

Question 1

Most of the candidates recognised that a physical quantity must comprise both a numerical value and a unit though answer **B** ('kilogram') was a popular distractor.

© 2023

Question 3

Candidates found this question difficult. Some calculated the cross-sectional area of the cylinder, and hence the volume of the cylinder rather than the surface area. Others selected **B** which is too precise – the value of the radius is only quoted to 2 significant figures, so the value of the area can only be given to 2 or 3 significant figures (**A**). One approach to calculating the absolute uncertainty is to calculate the difference between the maximum and minimum values and halving it.

Question 4

Candidates found this question difficult with many candidates choosing **A**. Candidates need to carefully read the wording of the question. The change in momentum of the ball can be found by drawing a vector triangle. The **magnitude** of the change in momentum is 0.10 kg m s^{-1} (**B**).

The change in the magnitude of the momentum of the ball is 0.08 – 0.06 = 0.02 kg m s^{-1} (**A**).

Question 6

Many candidates chose **C** instead of the correct answer **D**. The displacement-time graph shows the velocity of the object (the gradient of the graph) is first a constant positive value and then changes almost instantly to a constant negative value (the object is moving backwards at the same speed). The graph in **C** shows how the velocity changes over time. The acceleration of the object is zero at all times except when the object suddenly reverses direction – at these points the acceleration has a large value as there is a large change in velocity in a short time interval (graph **D**).

Question 10

Many candidates successfully recalled that, for elastic collisions between two objects, the relative speed of approach is equal to the relative speed of separation (**C**). Some thought that, when two objects of different masses collide, they exert different forces on each other (**D**). From Newton's 3rd law, in any collision between two objects, the forces exerted by each object on the other is the same.

Question 11

Most candidates correctly recognised that the resultant force on the satellite is zero, though some calculated half the torque ($40 \times 2.3 = 92$ N m – **A**) rather than the whole torque ($2 \times 40 \times 2.3 = 180$ N m – correct answer **C**).

Question 12

Around half the candidates answered this question correctly. The weight of the picture is the same in each case, so $R_1 = R_2$ (= W, the weight of the painting) which eliminates **C** and **D**. A vector diagram for the forces acting on the nail in each case shows that $T_1 > T_2$ (**B**).

Question 14

Candidates found this question difficult. From Archimedes' principle, the weight of seawater displaced by the sphere is equal to the total weight of the sphere, probe and string. If V is the volume of the sphere below the surface of the seawater and ρ is the density of seawater:

$$\rho V g = 5.00 + 2.00$$

$$V = \frac{7.00}{1.03 \times 10^3 \times 9.81} = 6.93 \times 10^{-4}\ \text{m}^3$$

Some candidates ignored the weight of the probe and string, obtaining a smaller value for V (4.95×10^{-4} m^3 – **C**). Others ignored the weight of the sphere in their calculation ($V = 1.98 \times 10^{-4}$ m^3 – **A**).

© 2023

www.dynamicpapers.com

Question 17

Just over half the candidates answered this question correctly. From the principle of conservation of energy, the work done by the projectile against air resistance is equal to the overall change in kinetic energy E_k and potential energy E_p combined, between the two positions.

Increase in $E_p = 0.25 \times 9.81 \times (35 - 30) = 12$ J.
Decrease in $E_k = 0.5 \times 0.25 \times (15^2 - 5^2) = 25$ J

Work done against air resistance = overall decrease in $(E_k + E_p) = 25 - 12 = 13$ J, which is **B**.
C is obtained if only the decrease in E_k is considered. **D** is obtained by considering the change in E_p as a decrease in energy.

Question 19

The majority of the candidates answered this question correctly, though some thought the graph demonstrated both elastic and plastic behaviour. For plastic behaviour, there must be some permanent extension after the force is removed – the graph shows the wire always returns to its original length, regardless of the force applied.

Question 20

Points P and Q are separated by a distance of three-quarters of a wavelength. The distance between P and Q does not change, so the phase difference is constant (graph **D**).

Question 23

Around half the candidates answered this question correctly. Candidates should be able to recall that the range of visible wavelengths is approximately 400 – 700 nm. The corresponding frequencies can then be calculated from the equation $v = f\lambda$, where $v = c = 3.0 \times 10^8$ m s^{-1}.

Question 24

Candidates found this question particularly difficult. From Malus's law, the intensity of light transmitted by the filter when the transmission axis is 30° from the vertical is:

$I_{30} = I_0 \cos^2 30$ (1)

where I_0 is the intensity of the initial beam of polarised light.

Similarly, when the transmission axis is 60° from the vertical:

$I_{60} = I_0 \cos^2 60$ (2)

Combining equations (1) and (2):

$$I_{60} = I_0 \cos^2 60 = \frac{I_{30}}{\cos^2 30} \times \cos^2 60 = 0.33\, I_{30}$$

© 2023

www.dynamicpapers.com

Question 25

Less than half the candidates answered this question correctly. As there is a node at the mouthpiece and an antinode at the other end of the musical instrument, the wavelengths λ of the lowest frequencies of sound produced by the instrument are given by:

$$L = \frac{\lambda}{4}, \frac{3\lambda}{4}, \frac{5\lambda}{4}, \ldots\ldots\ldots\ldots\ldots \frac{2n-1}{4}\lambda$$

where L is the length of the instrument. The corresponding frequencies f are given by:

$$f = \frac{v}{4L}, \frac{3v}{4L}, \frac{5v}{4L} \ldots\ldots\ldots\ldots \frac{2n-1}{4L}v$$

where v is the speed of sound. As the lowest frequency is 92 Hz, the other frequencies the instrument can produce are:

$3 \times 92 = 276$ Hz, $5 \times 92 = 460$ Hz, $7 \times 92 = 644$ Hz (option **C**)

Question 29

Candidates found this question difficult. If the distance L between the diffraction grating and the screen is increased, the first-order maxima will appear further apart on the screen. From the diffraction grating equation, $n\lambda = d \sin \theta$, both λ and d alter the value of θ. The value of N, the total number of lines on the grating, has no effect on θ.

Question 34

Candidates found this question difficult with many choosing **D**. The circuit described in the question is shown:

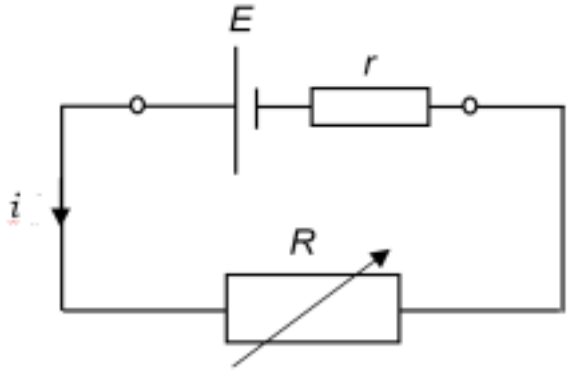

The resistance R of the variable resistor is decreased so the current i in the circuit increases. This eliminates **B** as a possible answer.

The potential difference between the terminals of the cell is $E - ir$ which must decrease as i increases, eliminating **C** and **D** as possible answers, leaving **A** as the correct answer. As the current increases, the 'lost volts' across the internal resistance r, equal to ir, must increase – i.e., more work is done moving unit charge through the internal resistance.

© 2023

www.dynamicpapers.com

Question 36

Around half the candidates answered this question correctly. One approach is to apply Kirchhoff's laws around different closed loops, as shown.

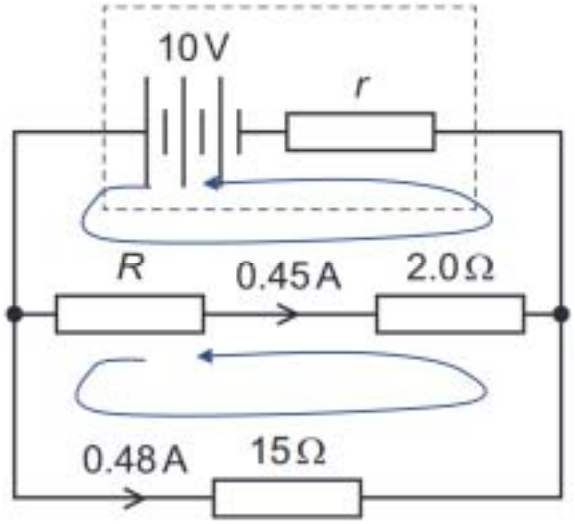

For the lower loop:

$(R + 2.0) \times 0.45 = 0.48 \times 15 \Rightarrow R = 14\ \Omega$

For the upper loop:

$(14 + 2.0) \times 0.45 + (0.45 + 0.48) \times r = 10 \Rightarrow r = 3.0\ \Omega$

© 2023

www.dynamicpapers.com

PHYSICS

Paper 9702/22
AS Level Structured Questions

Key messages

- Candidates should avoid prematurely rounding intermediate answers in the middle of a numerical calculation as this can lead to an incorrect final answer. Any rounding should be left until the final answer has been calculated.
- Candidates should pay close attention to the command words that are used in each question. For example, 'state and explain' means that an explanation as well as a statement should be included in the response. The syllabus contains a glossary of command words.
- Candidates should be encouraged to avoid using the pronoun 'it' in a sentence when the meaning of 'it' is vague or ambiguous.
- Candidates should learn in precise detail the definitions and symbol equations given in the syllabus. The meaning of every symbol in each of those equations should be clearly understood.

General comments

In general, there was no evidence of candidates having insufficient time to complete all the questions.

There were many straightforward question parts that enabled the weaker candidates to gain credit. For example, **Questions 1(a)**, **1(c)(i)**, **2(a)(ii)**, **3(b)**, **6(c)(i)** and **7(b)(i)**. Conversely, there were some question parts that were more challenging and suitable for the stronger candidates. For example, **Questions 3(d)**, **3(e)**, **4(c)**, **5(b)(i)**, **6(b)(i)**, **6(c)(iii)** and **6(c)(iv)**.

Comments on specific questions

Question 1

(a) Most of the candidates made a good start to the paper by correctly identifying the two SI base units in the list. A small minority incorrectly thought that the coulomb was an SI base unit.

(b) Only the stronger candidates realised that the car must have zero initial velocity and then constant acceleration. Sometimes candidates inappropriately stated two contradictory conditions for the car, such as acceleration and zero resultant force. Many of the weakest candidates merely repeated some of the information given in the stem of the question, for example stating that the car must move in a straight line.

(c) (i) The vast majority of the responses were correct. In a small number of cases, the given equation was rearranged incorrectly.

(ii) Most candidates knew how to determine the percentage uncertainty in the acceleration from the percentage uncertainties in the displacement and velocity. A minority of the candidates forgot to double the percentage uncertainty in the velocity before adding it to the percentage uncertainty in the displacement. Weaker candidates sometimes did calculations that demonstrated confusion between percentage uncertainty and absolute uncertainty.

(iii) The candidates were usually able to perform a correct calculation that was based on their answers to **(c)(i)** and **(c)(ii)**. The weakest candidates sometimes made a simple arithmetic error.

© 2023

Question 2

(a) (i) Most candidates were able to recall the relevant symbol equation for the Young modulus of the metal of the wire. This equation needed to be rearranged carefully when calculating the cross-sectional area of the wire. Some candidates first calculated the value of the stress in the wire which they then immediately rounded to two significant figures and this premature rounding then led to an incorrect value of the cross-sectional area. It is essential that intermediate answers within a calculation are not prematurely rounded and that any rounding is left until the final answer has been calculated.

(ii) The general expression for the change in gravitational potential energy was well known. As in the previous question part, it was important to not prematurely round up any intermediate answers in the middle of the calculation and to leave any rounding until the final answer. Some of the weakest candidates inappropriately equated the gain in gravitational potential energy to the kinetic energy of the block.

(b) Stronger candidates found it straightforward to calculate the output power of the motor and to then use the efficiency of the motor to determine its input power. Weaker candidates were sometimes able to calculate the output power but were often unable to use the efficiency to determine the correct input power. A small proportion of the weaker candidates calculated the input energy to the motor instead of its input power.

(c) Most candidates were able to calculate the resultant force acting on the block. Only the stronger candidates went on to correctly calculate the tension by subtracting the resultant force from the weight of the block. A common mistake was to add the resultant force to the weight. Another common mistake was to assume that the resultant force was equal to the tension. A significant proportion of the weaker candidates did not attempt this part of the question.

(d) The vast majority of the candidates realised that the first part of the graph would be an upward sloping straight line between time t_X and time t_Y. Sketching a line to represent the deceleration between time t_Y and time t_Z was more challenging. A common mistake was to represent the deceleration by a downward sloping line instead of an upward sloping line with a decreasing magnitude of gradient.

Question 3

(a) It was important to include the word ‘resultant’ when stating that the resultant force is zero and that the resultant torque is zero. Weaker candidates sometimes vaguely referred to the resultant ‘turning effect’ being zero. ‘Turning effect’ is not a physical quantity and should not be used as a substitute for torque or moment.

(b) The vast majority of the responses were correct. The question used the command word ‘show’ and therefore it was essential to show the correct calculation as well as the final answer.

(c) In general, stronger candidates found it straightforward to determine the weight of the beam by applying the principle of moments. Weaker candidates often made a mistake in their calculation of one or two of the three moments about end A of the beam. A common error was to use the wrong distance when calculating the moment of the weight about end A.

(d) Only a small minority of the candidates realised that the resultant force on the beam in a vertical direction must be zero because the beam is in equilibrium.

(e) The majority of the candidates found this final part of the question to be very challenging. A significant number of the stronger candidates incorrectly stated that there would be no effect at all on the horizontal component of the force at the hinge. Many candidates appeared to simply guess an answer to this part of the question.

© 2023

www.dynamicpapers.com

Question 4

(a) The symbol formulae for the kinetic energy and momentum were usually stated correctly. Sometimes an arithmetic error was made when combining these two formulae to determine the mass of the block X. The weakest candidates were usually able to recall the formula for the kinetic energy, but then often used the initial value of the momentum of block X as the value of its initial velocity.

(b) It was important to consider the direction of the momentum of each block when applying the principle of conservation of momentum. In general, weaker candidates did not carefully consider the directions and often substituted at least one value of momentum with an incorrect sign.

(c) Some candidates did realise that the average force on one of the blocks would be equal to its change in momentum divided by the contact time in the collision. However, a common error was to use the final momentum of one block instead of its change in momentum. Another common error was to use the difference between the momentums of the two blocks instead of the change in momentum of only one block.

Question 5

(a) (i) The period of the sound wave was usually calculated correctly. Stronger candidates went on to determine the correct time-base setting by dividing the value of the period by a distance of 4.0 cm. Weaker candidates sometimes used an incorrect distance in their calculation.

(ii) The vast majority of the candidates were able sketch the new trace so that it represented the correct period of the sound wave. However, a common misconception was that increasing the intensity of the sound wave by a factor of 3 would cause its amplitude to increase by the same factor. This caused many candidates to sketch the new trace with an incorrect amplitude of 3.0 cm instead of the required 1.7 cm. A significant number of the weakest candidates did not attempt this part of the question.

(b) (i) In order to fully explain why a bright fringe is produced at P, the candidates needed to explain that either the path difference of the waves from the slits is zero or the phase difference of the waves at P is zero. Only the strongest candidates were able to give this level of detail in their explanations.

(ii) This part of the question was usually answered correctly. Most of the candidates were able to recall the relevant symbol equation. Care needed to be taken to avoid a power-of-ten error when converting the value of the wavelength from nm to m. Weaker candidates sometimes transposed the equation incorrectly when making distance *D* the subject of the equation.

(c) Most candidates sketched an upward sloping straight line. However, the most common mistake was to draw this straight line so that the fringe width *x* was zero for a wavelength of 400 nm. Candidates should be encouraged to draw straight lines with a ruler instead of drawing them freehand.

Question 6

(a) Successful responses gave a precisely-worded definition. The electric potential difference across a component is defined as the energy transferred per unit charge. It is not sufficient to define electric potential difference as the energy transferred by unit charge because this does not refer to a ratio of quantities. Some candidates stated 'current × resistance' which is a formula for calculating potential difference but does not define it.

(b) (i) Most candidates incorrectly described the resistance as being zero. The fact that the current is zero or almost zero means that the resistance must be infinite or very high.

(ii) A common misconception was that the resistance was constant, rather than decreasing, because the gradient of the graph line was constant. Candidates need to be aware that the resistance is given by the ratio of the potential difference to the current and is not given by the gradient of the graph line.

© 2023

www.dynamicpapers.com

(c) (i) The vast majority of the candidates were able to successfully calculate the current in the resistance wire by applying Kirchhoff's first law to point X in the circuit.

(ii) Only the stronger candidates understood how to determine the resistance of the variable resistor. A common error was to assume that the potential difference across the variable resistor was 12 V or 6.0 V rather than 4.5 V. This then gave an incorrect answer of 8.0 Ω or 4.0 Ω instead of the correct answer of 3.0 Ω.

(iii) There were different methods of calculating the final answer. The most common method was to subtract the potential difference across the fixed resistor from the potential difference between points X and Z on the resistance wire. Most candidates were able to calculate one or two of the relevant potential differences in the circuit, but the vast majority found it challenging to then determine the potential difference between points W and Z. A significant number of the weaker candidates did not attempt this part of the question.

(iv) The candidates were asked to consider the currents in every part of the circuit. These currents were the current in the resistors, the current in the resistance wire and the current in the battery. Most of the candidates considered only one or two of these three currents as part of their response. A significant number attempted to answer the question without referring to any of the currents.

Question 7

(a) (i) The stronger candidates found this part of the question to be straightforward. Weaker candidates sometimes forgot to give an explanation as part of their response.

(ii) The stronger candidates were usually able to explain why nucleus X would have a greater charge than nucleus Z. However, many candidates did not fully understand the change that happens in a nucleus when a β^+ particle is emitted. A significant number of responses used the word 'it' multiple times without explicitly clarifying whether 'it' referred to nucleus X or nucleus Z.

(b) (i) Generally, well answered. The most common incorrect answer was 'leptons'.

(ii) Most candidates were able to recall, in general terms, the quark structure of a meson. Weaker candidates sometimes described the quark structure of a baryon.

© 2023

www.dynamicpapers.com

PHYSICS

Paper 9702/33
Advanced Practical Skills 1

Key messages

- Many candidates confuse the terms 'percentage uncertainty' and 'percentage difference'.

If an expression is suggested, a value C_1 for a constant in it can be found using data from an experiment. If the percentage uncertainty in the value is known to be U%, then the real value of the constant lies in the range $C_1 \pm U$%.

If the same expression is used with data from a second experiment and this gives a value C_2 which lies in the range $C_1 \pm U$% then the expression is supported.

The same principle can be applied using the difference between the two values. If the percentage difference between C_1 and C_2 is less than the percentage uncertainty in C, then the results support the expression.

Other valid methods can also be used for this analysis.

- Where a candidate is asked to justify the number of significant figures they have given in a calculated value they need to refer to the number of significant figures in the data that was used. They should name the measurements they are referring to rather than using a general term such as 'raw data'.

General comments

Most centres had no difficulty in providing the equipment needed.

The values given in the Supervisor's Results enabled examiners to allow for any small changes to equipment when assessing candidates' work.

Nearly all candidates completed the two questions.

There were many candidates who had been well prepared for the practical paper, and they demonstrated their skills in measuring, recording and processing their results.

Comments on specific questions

Question 1

(a) (i) Most values recorded for L were in the expected range.

(ii) Most candidates recorded the data correctly – others had recorded the angle to 0.1° instead of to the nearest degree.

© 2023

www.dynamicpapers.com

(b) The majority of results tables were neat and clear, and all contained at least six sets of measurements.

Column headings were usually correct, but there were a few omitted or incorrect units (such as ° for sin θ).

Strong candidates gave all their values of *h* to the nearest millimetre but in a few cases extra zeros were added to each reading.

In most cases all sin θ values were given to three significant figures as requested in the question. For many candidates the range of θ values was too small. Candidates should be encouraged always to take measurements over the widest range of values available to them with the apparatus.

(c) (i) The general standard of graphs was good.

Plotting of points was usually accurate, although in a few cases the plots were too large (heavy crosses or large dots) so that accuracy could not be checked.

In most cases the candidate had frequently-labelled scales which used simple intervals. A few candidates started their *h* axis from zero, and this compressed their points in the right-hand section of the grid.

For most candidates the scatter of the points about a linear trend was small enough to gain credit for quality of results.

(ii) A candidate's 'best fit' line could often be improved by rotation, and in some cases a kinked line was drawn.

(iii) Most candidates knew how to calculate the gradient of their line, the only common error being the use of coordinates that were too near to each other (the coordinates must be separated by at least half the length of the line). In most cases coordinates were read accurately, although awkward scales could make this difficult and sometimes led to errors. Use of values from the table of results was only accepted if they lay on the candidate's line.

(d) Many candidates correctly transferred their values from **(c)(iii)**, with only a few cases of using values to just one significant figure or written as fractions.

The units for *a* and *b* were sometimes omitted, but when they were included they were usually correct.

(e) The calculation of *M* was carried out well by most candidates.

Question 2

(a) Most values of *v* were in the expected range, but often only stated only to the nearest centimetre.

Many values of u_0 were outside the expected range but comparison with the Supervisor's value usually enabled credit to be given.

© 2023

www.dynamicpapers.com

(b) (i) Most candidates' *u* values were recorded to the nearest millimetre.

(ii) For *u* the precision of the measuring instrument (a metre rule) was 1 millimetre, but the uncertainty was greater than this due to parallax error and judging the torch position that gave the sharpest image. The strongest candidates estimated an absolute uncertainty in the range 5 to 10 mm which was then converted to a percentage.

(iii) The calculation of *f* and *n* was carried out well with few arithmetic errors.

(iv) Strong candidates identified that it was the significant figures in *u* and *v* that determined the number of significant figures that should be given for *n*. Others suggested the significant figures from *f* (a calculated value) or from 'raw data'. See Key Messages.

(c) Nearly every candidate recorded a second set of measurements using the higher concentration sugar solution.

(d) Most candidates calculated the two *k* values correctly, although some candidates rounded the answer to only one significant figure.

(e) Many candidates answered this question correctly and knew they had to calculate the percentage difference (or an equivalent) between the two *k* values, then compare it with the given uncertainty 20 per cent, then state their conclusion. See Key Messages.

(f) In most cases the improvements in part **(ii)** gained more credit than the problems in part **(i)**, often because some of the descriptions of difficulties didn't contain enough detail.

Many candidates stated that only two values of *k* weren't enough, but some did not give the reason ('not enough for a valid conclusion').

An important part of the experiment involved judging when the image was sharpest. A method of reducing unwanted external light was usually suggested.

The need to keep the torch aligned with the lens axis was often described, and a description of a method of mounting the torch (but not just 'clamping it') was accepted as an improvement.

Measuring *u* and *v* was another major difficulty (due to parallax problems), and this was pointed out by many candidates. Several suggested marking the lens position on the side of the container to assist with these measurements.

Possible contamination of the second sugar solution by any remains of the first was often identified as a problem. Cleaning of the container and lens before using the second solution was accepted as an improvement.

Several candidates noted that the measurement of *u* was not from the LED's themselves because they were positioned behind the front cover of the torch. Removal of the front cover was usually suggested as the improvement.

© 2023

www.dynamicpapers.com

PHYSICS

Paper 9702/42
A Level Structured Questions

Key messages

Candidates should always be guided by the number of significant figures in the data in the question when quoting the answer to calculations. In this paper, three significant figures were required several times. In a multistage calculation candidates need to work to at least one more significant figure than the data, so intermediary calculated values needed to have at least 4 significant figures in these questions.

Candidates should always think about the sign of an answer. For example, an electron energy level value must be negative.

General comments

In general terms, working was nearly always shown, which is encouraging, but candidates should try to present calculations logically, rather than scattering ideas around the page.

In 'Show that' calculations candidates should show every step in their working very clearly and also substitute in all numerical values, including constants. In **10(c)(i)** the numerical value for 'c' was expected, and not to be left as the symbol.

Comments on specific questions

Question 1

(a) A good number of correct definitions were seen. However, some candidates used the phrase 'work done to move unit mass from infinity'. The idea of 'per unit mass' is vital and coveys the division required.

There was an error in Fig. 1.1, with the gravitational potential ϕ axis plotted as positive numbers instead of negative numbers. This has been corrected in the published version of the paper. Please note that due to this issue with the question full marks have been awarded to all candidates for question **1(b)** and **(c)** to make sure that no candidates were disadvantaged.

Question 2

(a) There was much confusion here between the definition of an ideal gas and the assumptions of the kinetic theory. The stronger candidates defined the symbols, including 'thermodynamic temperature' for *T*.

(b) (i) Most candidates were able to use the provided data to show that the helium gas was behaving as an ideal gas. A few candidates omitted the conversion from temperature in degrees Celsius to kelvin.

(ii) Many candidates gave answers that confused internal and thermal energy, and whether the gas is doing work or having work done on it. Many candidates regarded the internal energy and the change in internal energy as the same thing. For example, comments such as 'ΔU increases' were common, where the correct comment would have been either 'U increases' or 'ΔU is positive'.

© 2023

www.dynamicpapers.com

(iii) Most candidates calculated the change in kinetic energy for a single molecule, rather than the change in the total kinetic energy of the molecules of the gas. A few who completed the correct calculation did not write the final answer to the expected 3 significant figures because the data was given to 3 significant figures. A few candidates incorrectly added 273 to the temperature change.

(c) Most candidates were able to set up this calculation. However, many candidates then made an error with significant figures or subtracting the two energies calculated, rather than adding them. Candidates were confused by the final negative temperature and the removal of thermal energy.

Question 3

(a) Most candidates correctly identified line P as the total energy of the oscillations. Many identified Q and R correctly as well, but some reversed the energy types. A few qualified the type of potential energy, such as elastic potential energy, but this was incorrect as there are changes in both elastic and gravitational potential energy.

(b) There were a good number of correct answers here. However, many candidates incorrectly decided that a one significant figure answer was appropriate. Candidates are reminded of the general advice that they should base the number of significant figures to which they present their answer on the precision of the data in the question.

(c) (i) Most candidates were able to give the cause of damping.

(ii) This calculation proved to be challenging. Common errors were to use $6 \times 8\%$ of the 6.4 mJ, to use 0.08^6 or to omit the subtraction from the total energy when using the correct energy fraction.

(iii) Many candidates were able to identify the type of damping as light but were unable to give a convincing reason for this conclusion. The fact that energy is lost slowly and that it takes time to return to equilibrium is just as true for heavy damping as it is for light damping, and candidates needed to give a clear indication that the continuation of the oscillations is the basis for the conclusion.

Question 4

(a) The majority of candidates were able to correctly state Coulomb's law. A small proportion omitted the squaring of the separation or used indirectly in place of inversely in the relationship. Indirectly covers a range of relationships, but only inverse square is correct here.

(b) (i) Candidates struggled with this force diagram. Some did not include all the forces, some added quantities that were not forces. Finally, the direction of the correct forces was sometimes incorrect – the electrostatic repulsion was drawn perpendicular to the string and the weight was drawn parallel to the string.

(ii) This multistage calculation proved to be challenging to most candidates. Many candidates were able to determine the magnitude of the electrostatic force. However, only the strongest candidates were able to resolve forces and apply the equilibrium conditions.

(iii) This calculation of potential energy was correctly carried out by most candidates. Some incorrectly squared the separation, and a few halved the separation.

(c) (i) The direction of the force was correctly stated by many candidates but there was a range of incorrect responses including downwards, to the right and to the left.

(ii) The stronger candidates were able to combine the two necessary formulae. However, a significant number used the incorrect expression $F = V / d$.

(iii) Many candidates appear to think that magnetic fields are the only type of field that can give rise to circular motion. Some candidates stated that there is no centripetal force, but only the stronger candidates were able to articulate the reason why there was no circular motion.

© 2023

www.dynamicpapers.com

Question 5

(a) Candidates struggled with the use of the logarithmic graph to present data. However, a good number were able to clearly show how the capacitance of the capacitor is found from the data.

(b) There was much confusion between log and non-log values. Many candidates substituted values of ln Q as Q in the exponential equation. Only the strongest candidates were able to correctly determine the resistance of *R*.

(c) The majority of candidates were able to calculate the correct answer here.

(d) Most candidates realised that a straight line from the same initial value of ln Q was required, but only the strongest candidates correctly deduced the quantitative effect of the parallel resistor on the gradient of the line.

Question 6

(a) The main difficulty for candidates was thinking that the voltage is due to the principles of electromagnetic induction / cutting flux, rather than the Hall effect. Responses in terms of the Hall voltage being determined by the act of rotation, rather than the orientation of the probe relative to the magnetic field, were common.

(b) (i) There were many incorrect or incomplete responses here. Some responses included quantities such as the number of turns or the number of moles that are not used to find the Hall voltage.

(ii) A good number of candidates were able to explain why copper is not used for the Hall probe. Some did not clear make in their statement a comparison between the two materials. For example, smaller *n* was needed, not just small *n*.

(c) Most candidates were able to use the correct equation for Faraday's law. However, many candidates struggled to determine the correct value of flux density to use and to deduce that the relevant time was that relating to the steepest part of the graph. Only the strongest candidates were able to put all these considerations together to determine the correct answer.

Question 7

(a) For descriptive questions, candidates need to be able to use technical language correctly and accurately. For this question, only candidates who correctly discussed the interplay of photons, electrons, photon energies and electron energy levels were able to achieve credit.

(b) Candidates generally struggled with this question. Some candidates were able to use the correct starting equation and/or identify the relevant wavelength. However, only the strongest candidates were able to correctly process the energy change, realising that the sign of the answer must be negative, and that the data requires a 3 significant figure answer.

Question 8

(a) This was straightforward for most candidates.

(b) (i) There were a good number of correct calculations, however a common error was to use the mass of the plutonium in kg and the molar mass in g mol^{-1} leading to a power of ten error.

(ii) The equation linking activity with number of unstable nuclei was correctly quoted by most candidates. However, there were errors in converting years into seconds and the use of the half-life in years, but the activity stated as being in Bq.

(iii) This calculation was challenging for candidates. Many candidates incorrectly applied P = E / t and used the time as the half-life of the plutonium.

© 2023

(iv) Candidates should be reminded that intermediate values used in calculations should carry more significant figures than expected in the final answer. Premature rounding of intermediate values leads to incorrect answers in the final significant figure, and this was a common problem in this question. The data justifies a 3 significant figure answer, and candidates who used a value of decay constant prematurely rounded to 3 significant figures often arrived at an answer that was not quite correct to the expected precision. Some candidates did not use the exponential decay formula at all.

(c) Candidates needed to explain why the lower mass is advantageous, and why the shorter half-life is disadvantageous. Most candidates struggled with this. Just stating information given in the question is not sufficient to gain credit.

Question 9

(a) Whilst most candidates did refer to a piezo-electric crystal, the context in which this was mentioned was often in relation to the production of the ultrasound rather than its detection. Of those who did address the aspect that the question was asking about (detection), there was confusion between the concepts of stress and strain. Many candidates appeared to incorrectly think that the concept of stress refers to the deformation of the crystal.

(b) (i) The majority of candidates answered this correctly. A small number divided by $\sqrt{2}$.

(ii) The majority of candidates answered this correctly. There were some power of ten errors due to the lack of knowledge of the meaning of 'mega'.

(c) (i) Most candidates were able to determine the unit for specific acoustic impedance.

(ii) The majority of candidates answered this correctly.

(iii) Many candidates struggled with this question, giving responses that were too vague. For example, many candidates stated that 'most' of the ultrasound is reflected (which could be taken as just more than half). Candidates needed to state the idea that 'almost all' the ultrasound is reflected. The strongest candidates evaluated the intensity reflection coefficient, almost 1, in supporting their answers.

Question 10

(a) Whilst most candidates did realise that the variations in brightness were due to differences in luminosity and in proximity, many were unable to identify which conditions led to the star appearing brighter. For example, different luminosity was stated, rather than higher luminosity.

(b) This was generally well known, though some candidates did not convey the correct meaning, for example 'The luminosity of a known star'. Others gave contradictory responses. Candidates should know that a standard candle is an object that has a particular characteristic. A standard candle is not a luminosity, not a unit and not a measuring device.

(c) (i) Many candidates did use the Doppler equation for light but thought that the larger wavelength and not the smaller one was the unshifted wavelength. Others omitted to show the substitution of the speed of light. 'Show that' questions always require full substitution of values to be shown.

(ii) This calculation was answered well by most candidates.

(iii) Candidates generally answered well. However, some candidates misinterpreted the previously given data and thought the star in the galaxy was moving towards the observer.

© 2023

www.dynamicpapers.com

PHYSICS

Paper 9702/52
Planning, Analysis and Evaluation

Key messages

- In **Question 1**, candidates' responses should include detailed explanations of experimental procedures such as how to control variables, how to take measurements and how to analyse the data.
- The numerical answers towards the end of **Question 2** require candidates to show all their working and for the values to be correctly evaluated with appropriate units. A full understanding of significant figures and the treatment of uncertainties is required.
- Candidates should be encouraged to consider the powers of ten and units at every stage of the calculations in **Question 2**.
- The practical skills required for this paper should be developed and practised with a 'hands-on' approach throughout the course.

General comments

In **Question 1**, it is advisable that candidates should think carefully about the experiment following the points given on the question paper and to imagine how they would perform the experiment in the laboratory. Planning a few key points before answering **Question 1** is useful. Some candidates drew diagrams that did not show a workable experiment. Other candidates did not realise that the liquid needed to leave the tube and incorrectly measured the height the liquid moved up the tube. In the analysis section candidates must explicitly state the quantities to be plotted on each axis. It is essential for candidates to have experienced practical work in preparation for answering this question.

In **Question 2**, candidates should be familiar with completing a results table for quantities and their uncertainty, and with finding the gradient and *y*-intercept of a graph. For several candidates, credit was not awarded because the points were not plotted correctly, the line of best fit or worst acceptable line was not drawn correctly or coordinates were wrongly read off. In question parts requiring mathematical manipulation, stronger candidates clearly stated the equation used with correct substitution of numbers, and then calculated the answer and unit. Candidates should be encouraged to set out their working in a logical and readable manner to all the parts requiring mathematical manipulation. Care should be taken when numbers are crossed out.

Comments on specific questions

Question 1

Most candidates correctly identified the independent and dependent variables. Candidates should then consider the control of variables and explicitly state the quantities that need to be kept constant to make the experiment a fair test. In this experiment it was expected that candidates would state that *h* would be kept constant.

Candidates were awarded credit for a clearly labelled diagram. Diagrams should be drawn of the workable experiment. In this experiment, strong candidates placed a fan on the bench in line with the turbine. Further credit was given to candidates who drew additional apparatus to collect the liquid from the top of the pipe. Several acceptable methods were seen. The use of a lid above the tank was not credited since the liquid would just flow onto the bench which is not a safe method.

© 2023

www.dynamicpapers.com

Many candidates used a stop-watch to measure the time either to determine the frequency of the fan or the time for the liquid to be collected. Credit was not awarded for 'use a stop-watch to measure time' – candidates should be encouraged to be specific about the measured quantity.

Further credit was awarded for detail on how to determine the frequency *f*. A common method described was timing a number *n* of rotations and then stating an expression to determine *f*. Another common method was the use of a video. For this method, it was necessary for the candidates to explain how the time could be determined from the video, (e.g. a time stamp) and an expression to determine *f*. Many candidates marked one of the blades on the turbine. To gain credit an explanation was needed as to why the blade was marked.

Many candidates stated that a top-pan balance would be used to measure the mass – to gain credit it needed to be clear that it was used to determine the mass of the liquid collected – candidates who only measured the height of the liquid in the tube did not gain credit. Credit was given for an explanation of how the mass of the liquid leaving the tube was determined. Many methods were seen which involve the subtraction of two masses. Credit was also given for stating that *Q* was equal to the mass of the liquid leaving the tube divided by the time for the liquid to leave the tube. Simply stating mass divided by time was not considered vague and repeating the question – it was expected detailed use of quantities would be stated.

Credit was also given for using a ruler or calipers to measure the height *h* the liquid moves.

Many candidates suggested correct axes for a graph (often *Q* against f^3). Candidates must explicitly state the quantities to be plotted on each axis either in the text or on drawn axes – credit is not given for just writing $y = mx + c$ under an expression. Candidates also needed to explain how the graph would confirm the suggested relationship. Candidates need to use the words 'relationship is valid if' and the word 'straight' to describe the line. Several candidates incorrectly stated that the straight line must pass through the origin. Strong candidates often indicated that the straight line would pass through a *y*-intercept and quoted the expression for the *y*-intercept.

Candidates needed to explain how they would determine values of *C* and *D* from the experimental results using the gradient and *y*-intercept. Credit was not awarded to candidates who did not correctly identify appropriate axes to plot. Some candidates gained credit for plotting f^3 against *Q* and then determining expressions for *C* and *D*.

A few candidates correctly completed expressions for gradient and *y*-intercept but failed to make *C* and *D* subjects of an expression so did not gain credit. *C* and *D* needed to be the subject of the expression.

The additional detail section had a maximum of six marks that could be awarded. Candidates should be encouraged to write their plans including appropriate detail; some candidates' answers suggested that they did not have sufficient practical experience. Vague responses were not credited. It is essential that candidates' answers are relevant to the experiment in question rather than general 'textbook' rules for working in the laboratory. When describing safety precautions, candidates should be encouraged to explain how the precaution proposed is relevant to the experiment, e.g., in this experiment, relevant precautions that prevented the liquid from spilling on the bench and floor gained credit. The emphasis is on the prevention as opposed to resolving an issue, so credit was not given for using 'towels to mop up spills'. Credit was also given for the use of G-clamps to prevent the turbine falling and for the use of goggles to prevent dust particles entering the eyes. Standard laboratory rules do not normally gain credit.

There was additional credit for repeating the experiment for each value of *f* and determining an average for *Q*. Further credit was awarded for the method of changing the value of *f* by either changing the distance of the fan or changing the speed of the fan, for waiting for the turbine to rotate steadily before starting the timing and methods to reduce to uncertainty in *Q*.

Question 2

(a) Candidates who were mathematically confident were able to work through the algebra and achieve credit. Candidates should use the white space on the question paper to rearrange the equation into an equation of a straight line. Some candidates incorrectly omitted the negative sign from the expression for the *y*-intercept.

© 2023

(b) Most candidates were able to calculate values of $\frac{1}{f}$ and d correctly. Since f was recorded to two significant figures, values of $\frac{1}{f}$ should have been recorded to two (or three) significant figures.

Care should be taken when rounding as this sometimes leads to errors, for example a few candidates wrote in the first row 0.66 or 0.666 rather than 0.67 or 0.667.

Many candidates determined the absolute uncertainty in d correctly. A small minority did not half the range.

(c) (i) The points and error bars were straightforward to plot. When plotting points, the diameter of each point should be less than half a small square. Candidates need to take greater care over the accuracy of the error bars and ensure that the error bars are symmetrical.

(ii) Most candidates appear to be using a sharp pencil and a transparent 30 cm ruler. For correctly plotted data, the line of best fit did not pass through both the highest and lowest point. The worst acceptable line was drawn well in general, and many stronger candidates drew a line which passed through all the error bars. Candidates should clearly label the lines drawn. Where a dashed line represents the worst acceptable line, the dashed parts of the line should cross the error bars.

(iii) Most candidates clearly demonstrated the points that they used to calculate the gradient. Some candidates misread coordinates or did not use a sensibly sized triangle. A small number of candidates chose data points that did not lie on the lines, often using data from the table that is close to the line instead. Candidates should be encouraged to select two points on the line of best fit which are easy to read, i.e., points that are on grid lines. It is good practice to consider the power of tens at this stage by including the 10^{-3} in the x values.

When determining the uncertainty in the gradient, candidates need to show their working, including the coordinates that they have used from the worst acceptable line and a subtraction between the values of their gradients for the line of best fit and the worst acceptable line.

(iv) The majority of the candidates who were awarded full credit set out their working clearly. Stronger candidates often substituted data from the gradient calculation in **(c)(iii)** into $y = mx + c$. Some candidates determined the y-intercept incorrectly by $mx – y$. Other candidates incorrectly divided the y value by mx. A few candidates mixed powers of ten between the gradient and the x values.

When determining the uncertainty in the y-intercept, candidates need to show their working, including the gradient value of the worst acceptable line and the coordinates that they have used from the worst acceptable line. A subtraction between the values of their y-intercepts for the line of best fit and the worst acceptable line should be demonstrated. Some candidates were confused with the negative signs.

(d) Most candidates correctly used the gradient to determine v and the y-intercept to determine k. Common errors were either using too many significant figures or using incorrect units. Credit was given for candidates who determined the unit from the graph e.g., 1500 Hz m. Candidates should use the correct powers of ten for their quantities – a common error was omitting the 10^{-3} in the calculations. Strong candidates clearly demonstrated the method used.

To determine the absolute uncertainty in v, the easiest method was to multiply the absolute uncertainty in the gradient by 4. Candidates also gained credit for using a maximum/minimum method and finding the difference between the calculated value.

(e) Candidates who correctly allowed for the power of ten usually gained credit for calculating a value for f. Correct substitution of numbers was essential for credit. The common error was not determining an answer of 1.2 Hz by omitting the 10^{-3} from the axis on the graph.

© 2023