www.dynamicpapers.com

Cambridge Assessment International Education

# Cambridge International AS & A Level

CANDIDATE NAME

CENTRE NUMBER

CANDIDATE NUMBER

*9747891656*

**BIOLOGY** **9700/35**

Paper 3 Advanced Practical Skills 1 **October/November 2023**

**2 hours**

You must answer on the question paper.

You will need: The materials and apparatus listed in the confidential instructions

**INSTRUCTIONS**

- Answer **all** questions.
- Use a black or dark blue pen. You may use an HB pencil for any diagrams or graphs.
- Write your name, centre number and candidate number in the boxes at the top of the page.
- Write your answer to each question in the space provided.
- Do **not** use an erasable pen or correction fluid.
- Do **not** write on any bar codes.
- You may use a calculator.
- You should show all your working and use appropriate units.

**INFORMATION**

- The total mark for this paper is 40.
- The number of marks for each question or part question is shown in brackets [ ].

| For Examiner's Use | |
|---|---|
| 1 | |
| 2 | |
| Total | |

This document has **16** pages. Any blank pages are indicated.


© UCLES 2023

[Turn over

www.dynamicpapers.com



**1** When potato cells are placed into different concentrations of sodium chloride solution, water moves between the sodium chloride solution and the potato cells.

You will investigate the effect of different concentrations of sodium chloride solution on potato tissue.

You will need to:
- prepare different concentrations of sodium chloride solution, **S**
- put potato tissue into the different concentrations of sodium chloride solution
- record the angle the potato tissue bends
- use your results to estimate the concentrations of unknown concentrations of sodium chloride solutions, **U1** and **U2**.

You are provided with the materials shown in Table 1.1.

**Table 1.1**

| labelled | contents | hazard | volume / $cm^3$ |
|---|---|---|---|
| **P** | 7 pieces of potato tissue | none | – |
| **S** | 10.0% sodium chloride solution | none | 200 |
| **U1** | unknown concentration of sodium chloride solution | none | 50 |
| **U2** | unknown concentration of sodium chloride solution | none | 50 |
| **W** | distilled water | none | 200 |

It is recommended that you wear suitable eye protection.

**(a)** You will need to use proportional dilution to make five different concentrations of sodium chloride solution, **S**.

You will need to prepare 50 $cm^3$ of each concentration, using **S** and **W**.

Table 1.2 shows two of the concentrations you will use.

Decide which **three** other concentrations of sodium chloride solution you will use.

**(i)** Complete Table 1.2 to show how you will prepare the other concentrations.

© UCLES 2023

www.dynamicpapers.com



**Table 1.2**

| percentage concentration of sodium chloride | volume of S /cm$^3$ | volume of W /cm$^3$ |
|---|---|---|
| 10 | 50 | 0 |
| 0 | 0 | 50 |

[2]

Carry out step 1 to step 16.

step 1 Label five beakers with the percentage concentrations of sodium chloride solution stated in Table 1.2.

step 2 Prepare the concentrations of sodium chloride solution, stated in Table 1.2, in the beakers labelled in step 1.

step 3 Put a piece of potato tissue into each of the beakers you labelled in step 1, as shown in Fig. 1.1.

step 4 Put a piece of potato tissue into each of the beakers labelled **U1** and **U2**, as shown in Fig. 1.1.

step 5 Start timing.

step 6 Leave the pieces of potato tissue in the sodium chloride solutions for 20 minutes.

While you are waiting, use your time to continue with other parts of Question 1.

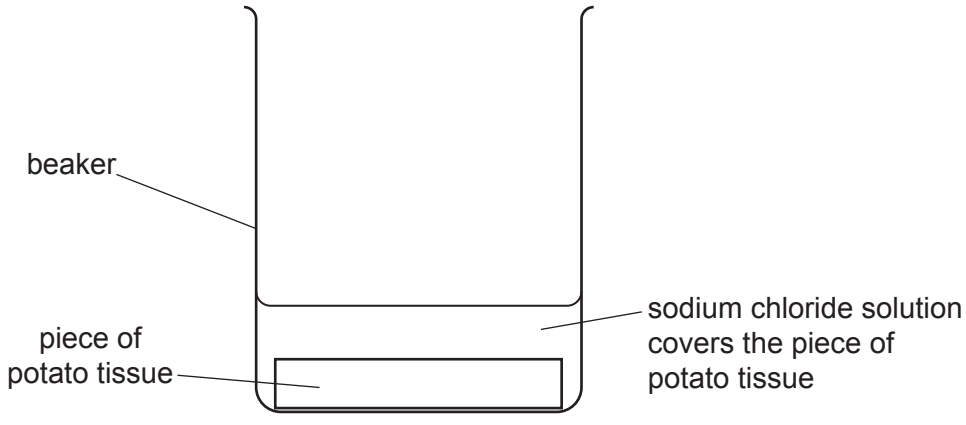


**Fig. 1.1**

© UCLES 2023

**[Turn over**

www.dynamicpapers.com



You are provided with two sheets of A4 paper, each showing four protractors.
Do **not** cut these into separate protractors. Do **not** remove them from the plastic covering.

You will use the protractors to measure the angle the pieces of potato tissue bend after being left for 20 minutes in the sodium chloride solutions.

step 7 After 20 minutes (step 6) remove the piece of potato tissue from the 10.0% sodium chloride solution and put it onto a paper towel to remove the excess liquid.

step 8 Put the piece of potato tissue on the vertical line of a protractor, as shown in Fig. 1.2.

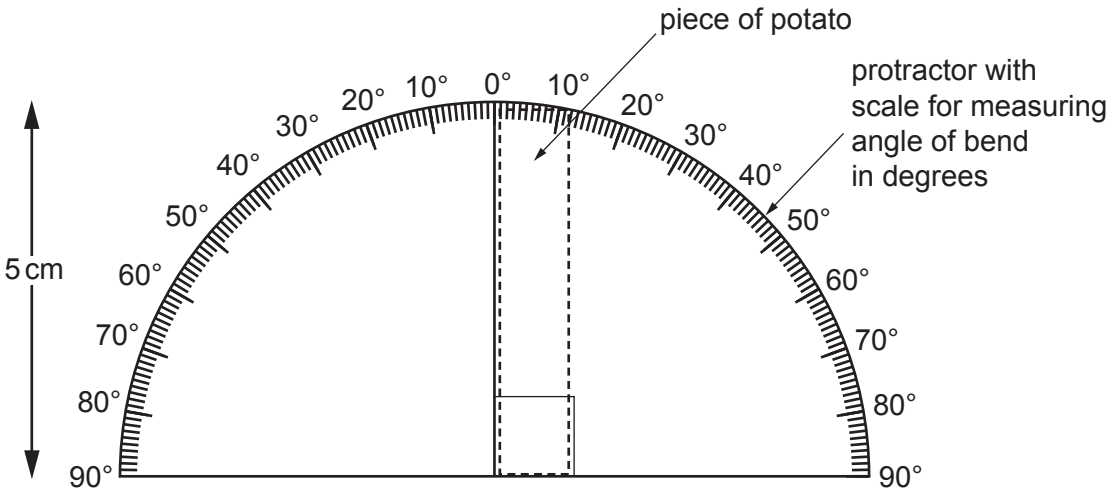


**Fig. 1.2**

step 9 Put your finger on the bottom of the potato tissue and press firmly, as shown in Fig. 1.3. Hold the potato tissue firmly in this position.

© UCLES 2023

www.dynamicpapers.com



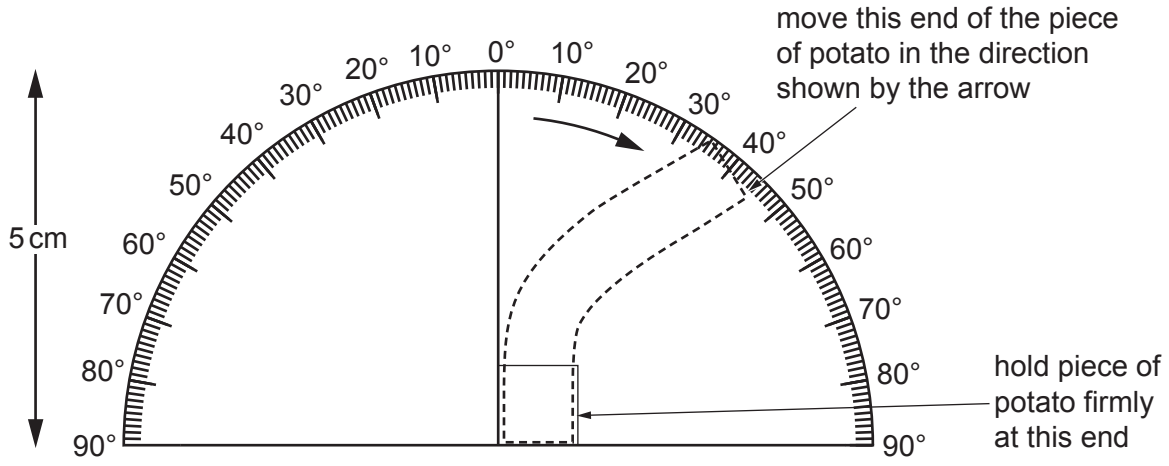


**Fig. 1.3**

step 10 Move the top of the potato tissue, as shown in Fig. 1.3, until there is strong resistance.

step 11 Mark the position of the top of the potato tissue on the protractor, as shown in Fig. 1.4.

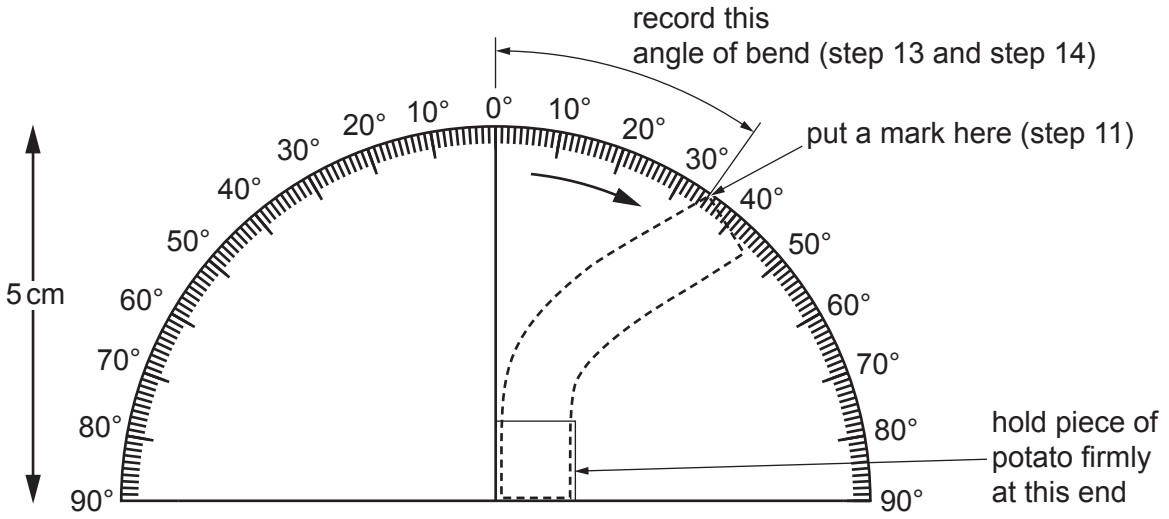


**Fig. 1.4**

step 12 Remove the potato tissue and put it in the container labelled **For waste**.

step 13 Measure the angle between the mark and the vertical line on the protractor, as shown in Fig. 1.4.

step 14 Record your result in **(a)(ii)**.

step 15 Repeat step 7 to step 14 using the potato tissue from the other concentrations of sodium chloride solution prepared in step 2.

step 16 Repeat step 7 to step 13 using the potato tissue from **U1** and **U2**. Record your result for **U1** and for **U2** in **(a)(iv)**.

© UCLES 2023



**[Turn over**

www.dynamicpapers.com



**(ii)** Record your results in an appropriate table.

[4]

**(iii)** State the independent variable.

..... [1]

**(iv)** State the result for **U1** and **U2**.

result for **U1** .....

result for **U2** .....

[1]

**(v)** Use your results in **(a)(ii)** to estimate the concentration of sodium chloride in **U1** and **U2**.

estimate of **U1** = ..... %

estimate of **U2** = ..... %

[2]

**(vi)** Explain, in terms of water potential, the difference between the result for **U1** and the result for **U2**.

.....

.....

.....

.....

..... [3]

www.dynamicpapers.com



**(vii)** Suggest how you could make improvements to the procedure so that a more accurate estimate of the concentration of sodium chloride in **U1** and **U2** could be obtained.

.....

.....

.....

.....

.....

.....

.....

.....

..... [3]

www.dynamicpapers.com



**(b)** A scientist measured the concentration of sodium chloride in extracts from different vegetables.

The results are shown in Table 1.3.

**Table 1.3**

| type of vegetable extract | concentration of sodium chloride / mg 100 $cm^{-3}$ |
|---|---|
| green beans (GB) | 3 |
| cauliflower (CA) | 33 |
| celery (CE) | 115 |
| broccoli (BR) | 89 |
| green cabbage (GC) | 20 |

**(i)** Draw a bar chart of the data in Table 1.3 on the grid in Fig. 1.5.
Use a sharp pencil.

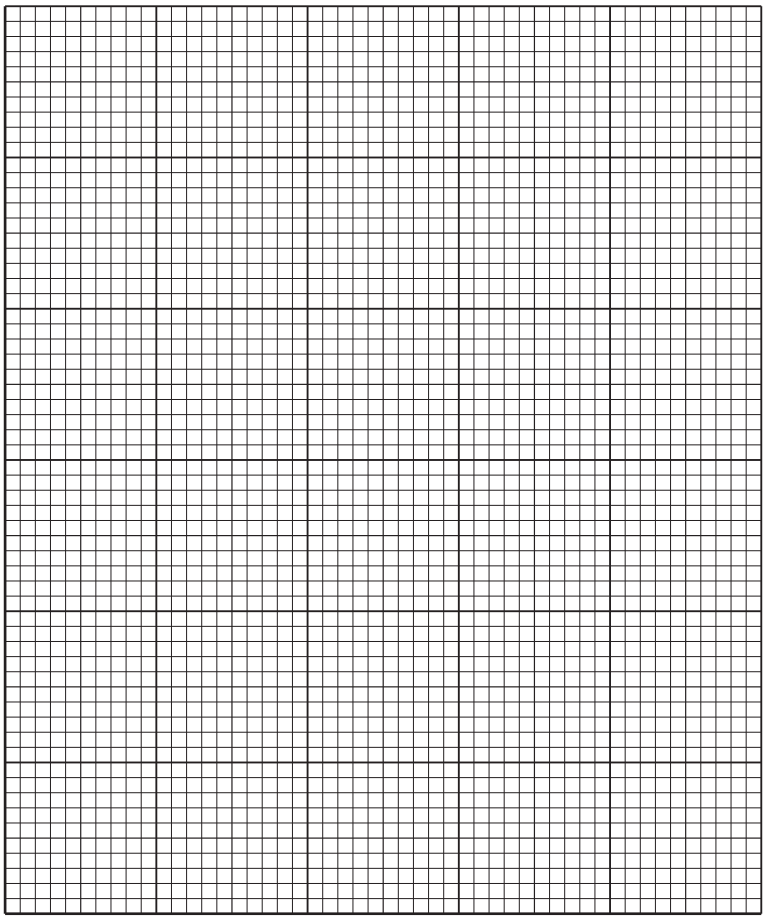

**Fig. 1.5**

[4]

© UCLES 2023

www.dynamicpapers.com



**(ii)** The scientist then placed pieces of plant tissue from each of the vegetables in Table 1.3 into 100 mg 100 $cm^{-3}$ sodium chloride solution. The dimensions of the pieces of plant tissue were standardised.

The plant tissues were left in the solution for 1 hour.

The scientist then observed the cells in these tissues using a microscope.

The scientist noted that, in many of the plant tissues, there were many plasmolysed cells. For one tissue there were no plasmolysed cells on the slide.

Using this information and Table 1.3, suggest which vegetable resulted in no plasmolysed cells.

..... [1]

[Total: 21]

© UCLES 2023



**[Turn over**

www.dynamicpapers.com



**2** **L1** is a slide of a stained transverse section through a plant stem.

**(a)** **(i)** Draw a large plan diagram of the region of the stem on **L1** indicated by the shaded area in Fig. 2.1. Your drawing should include at least one vascular bundle. Use a sharp pencil.

Use **one** ruled label line and label to identify the epidermis.

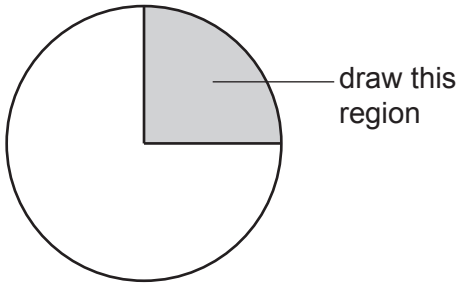


**Fig. 2.1**

[5]

© UCLES 2023

www.dynamicpapers.com



**(ii)** Observe the vascular tissue on the section of the stem on **L1**.

Select **one** large xylem vessel element and a group of **three** adjacent, smaller xylem vessel elements.

- Make a large drawing of this group of **four** xylem vessel elements.
- Use **one** ruled label line and label to identify the cell wall.

[5]

www.dynamicpapers.com



**(b)** Fig. 2.2 is a photomicrograph of a stained transverse section through a different stem from **L1**.

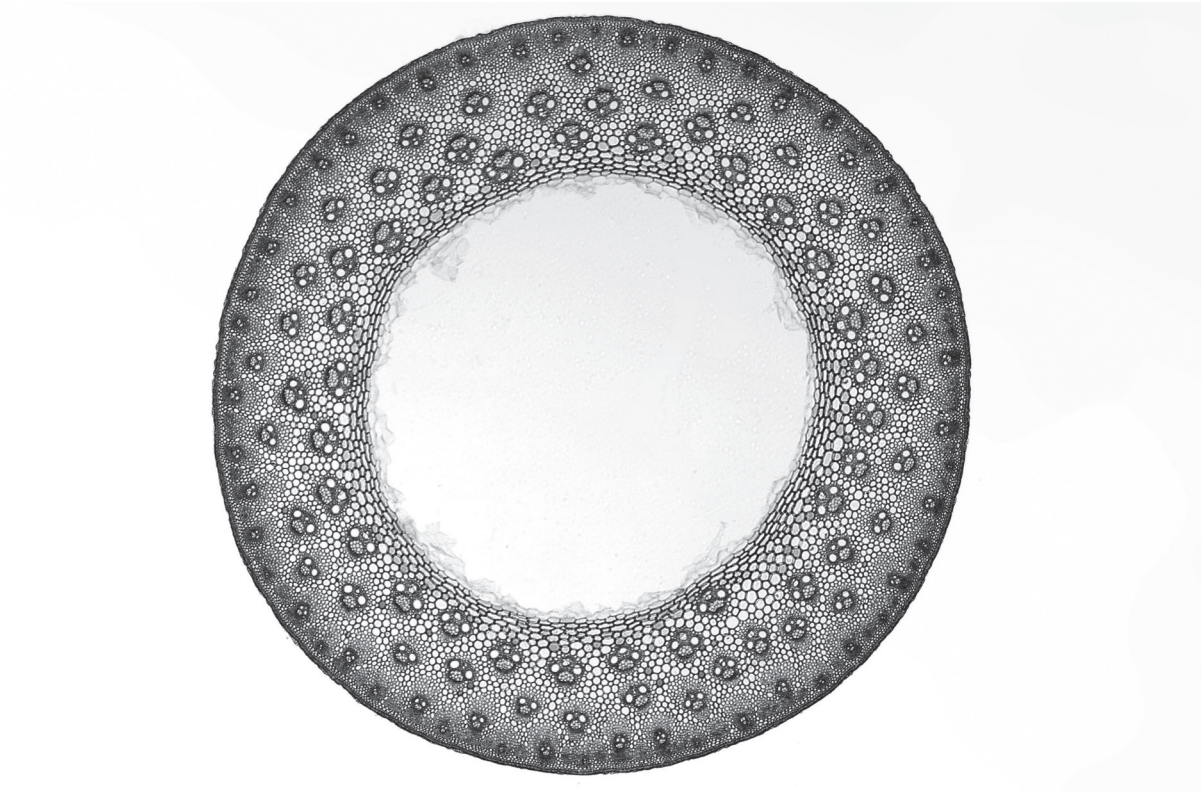

**Fig. 2.2**

Identify **three** observable differences, other than colour, between the stem section in Fig. 2.2 and the stem section on **L1**.

Record these **three** observable differences in Table 2.1.

**Table 2.1**

| feature | Fig. 2.2 | L1 |
|---|---|---|
| | | |

[4]

© UCLES 2023

www.dynamicpapers.com



**BLANK PAGE**

www.dynamicpapers.com



**(c)** Fig. 2.3 is the same photomicrograph as that shown in Fig. 2.2.

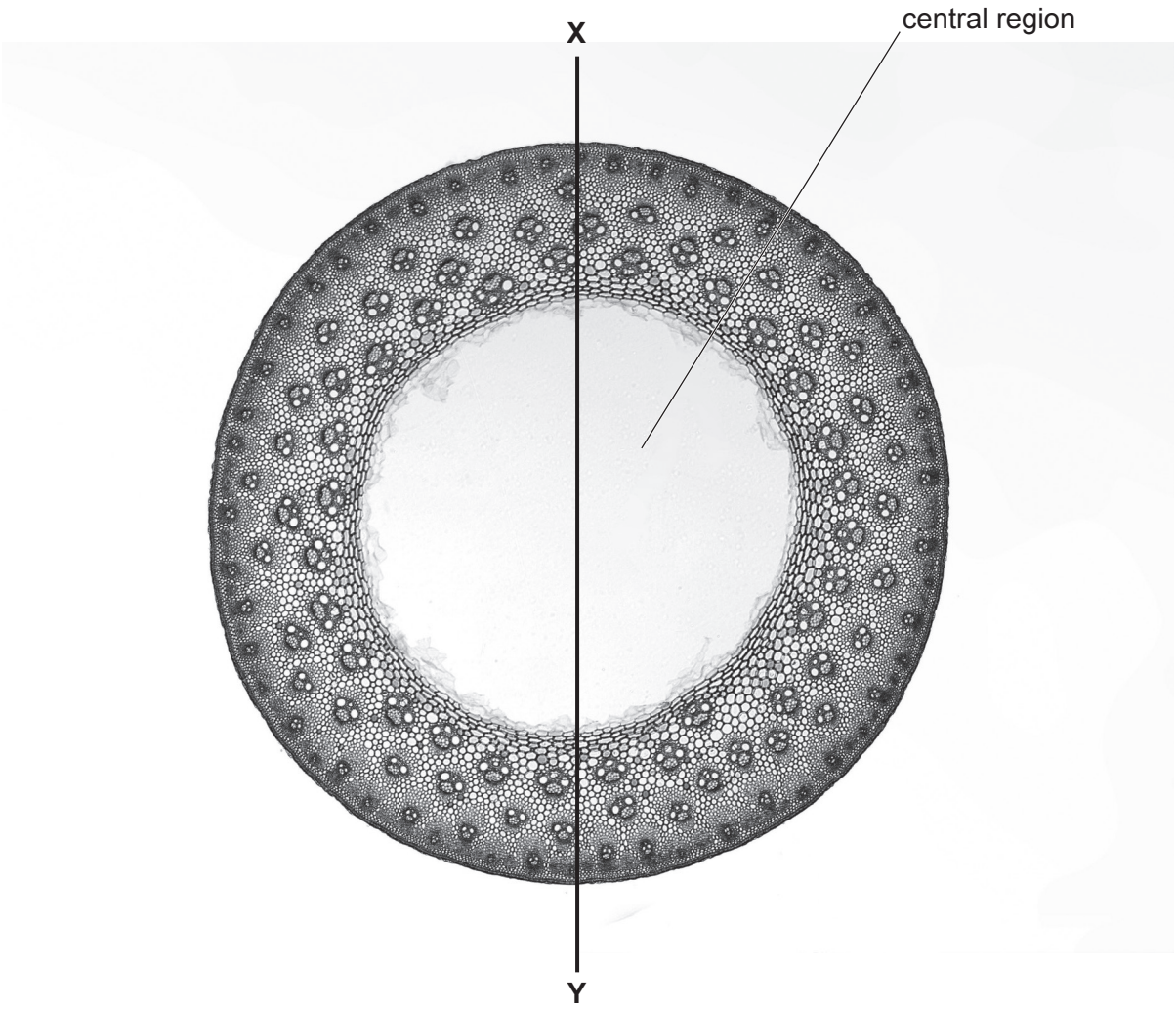


**Fig. 2.3**

**(i)** Along the line **X**–**Y**, measure the diameter of the whole stem section **and** the diameter of the central region.
Use appropriate units.

diameter of whole stem section .....

diameter of central region .....
[2]

© UCLES 2023

www.dynamicpapers.com



**(ii)** Calculate the area of the whole stem section and the area of the central region using your answers in **(c)(i)** and the equation:

$$\text{area} = \pi r^2$$

Show your working.

area of whole stem section .....

area of central region .....
[2]

**(iii)** State the ratio of the area of the whole stem section to the area of the central region.

ratio ..... [1]

[Total: 19]

© UCLES 2023

www.dynamicpapers.com



**BLANK PAGE**

Permission to reproduce items where third-party owned material protected by copyright is included has been sought and cleared where possible. Every reasonable effort has been made by the publisher (UCLES) to trace copyright holders, but if any items requiring clearance have unwittingly been included, the publisher will be pleased to make amends at the earliest possible opportunity.

To avoid the issue of disclosure of answer-related information to candidates, all copyright acknowledgements are reproduced online in the Cambridge Assessment International Education Copyright Acknowledgements Booklet. This is produced for each series of examinations and is freely available to download at www.cambridgeinternational.org after the live examination series.

Cambridge Assessment International Education is part of Cambridge Assessment. Cambridge Assessment is the brand name of the University of Cambridge Local Examinations Syndicate (UCLES), which is a department of the University of Cambridge.

© UCLES 2023