www.dynamicpapers.com

Cambridge Assessment International Education

Cambridge International AS & A Level

CANDIDATE NAME

CENTRE NUMBER | | | | | |

CANDIDATE NUMBER | | | | |

5634110436

BIOLOGY **9700/35**

Paper 3 Advanced Practical Skills 1 **May/June 2022**

2 hours

You must answer on the question paper.

You will need: The materials and apparatus listed in the confidential instructions

INSTRUCTIONS

- Answer **all** questions.
- Use a black or dark blue pen. You may use an HB pencil for any diagrams or graphs.
- Write your name, centre number and candidate number in the boxes at the top of the page.
- Write your answer to each question in the space provided.
- Do **not** use an erasable pen or correction fluid.
- Do **not** write on any bar codes.
- You may use a calculator.
- You should show all your working and use appropriate units.

INFORMATION

- The total mark for this paper is 40.
- The number of marks for each question or part question is shown in brackets [ ].

For Examiner's Use	
1	
2	
Total	

This document has **12** pages.

© UCLES 2022

[Turn over

www.dynamicpapers.com

1 The enzyme invertase catalyses the hydrolysis (breakdown) of sucrose to fructose and glucose.

You will investigate the effect of enzyme concentration on this enzyme-catalysed reaction.

You are provided with the materials shown in Table 1.1.

Table 1.1

labelled	contents	hazard	volume / cm^3
R	60 $mmol\,dm^{-3}$ reducing sugar solution	none	50
B	Benedict's solution	harmful irritant	50
W	distilled water	none	200
E	1.0% invertase solution	harmful irritant	20
S	30 $mmol\,dm^{-3}$ sucrose solution	none	50

If **B** or **E** come into contact with your skin, wash off immediately under cold water.

It is recommended that you wear suitable eye protection.

You will need to:
- prepare a range of reducing sugar solutions to use as standards
- investigate the effect of invertase concentration on the breakdown of sucrose.

Carry out step 1 to step 10.

step 1 Set up a water-bath and heat to boiling ready for step 7.

step 2 Label four small beakers **60**, **30**, **6** and **0.6**.

Table 1.2 shows the instructions for making four solutions of different reducing sugar concentration.

Table 1.2

reducing sugar concentration / $mmol\,dm^{-3}$	instructions
60	transfer 20 cm^3 of solution **R** into the beaker labelled **60**
30	put 10 cm^3 of solution **R** into the beaker labelled **30**, add 10 cm^3 of distilled water, **W**, and mix well
6	put 2 cm^3 of solution **R** into the beaker labelled **6**, add 18 cm^3 of distilled water, **W**, and mix well
0.6	put 2 cm^3 of the 6 $mmol\,dm^{-3}$ reducing sugar solution (from the beaker labelled **6**) into the beaker labelled **0.6**, add 18 cm^3 distilled water, **W**, and mix well

© UCLES 2022

www.dynamicpapers.com

step 3 Follow the instructions shown in Table 1.2 to produce the four reducing sugar concentrations shown.

step 4 Label 4 test-tubes **60**, **30**, **6** and **0.6**.

step 5 Put 2 cm^3 of each reducing sugar concentration into the appropriately labelled test-tube.

step 6 Add 2 cm^3 of **B** to each test-tube and shake gently to mix.

step 7 Put all four test-tubes into the boiling water-bath for 2 minutes.

step 8 After 2 minutes turn off the water-bath. You will need this again in step 11.

step 9 Remove the test-tubes from the water-bath and shake gently to mix the contents.

step 10 Observe the final colour of the contents of each test-tube and record your observations in **(a)**.

(a) Record the colour of the contents of each test-tube in Table 1.3.

Table 1.3

reducing sugar concentration / mmol dm^{-3}	**colour after 2 minutes**
60	
30	
6	
0.6	

[2]

www.dynamicpapers.com

Carry out step 11 to step 19.

step 11 Heat the water-bath to boiling ready for step 18.

You will need to carry out a **serial** dilution of the 1.0% invertase solution, **E**, to reduce the concentration by a **factor of ten** between each successive dilution.

You will need to prepare **four** concentrations of invertase in addition to the 1.0% invertase solution, **E**.

After the serial dilution is completed, you will need to have at least 9 cm^3 of each concentration available to use.

(b) (i) Complete Fig. 1.1 to show how you will prepare your serial dilution.

Fig. 1.1 shows the first two beakers you will use to make your serial dilution. You will need to draw **three** additional beakers.

For each beaker, add labelled arrows to show:
- the volume of invertase solution transferred
- the volume of distilled water, **W**, added.

Under each beaker, state the concentration of invertase solution.

© UCLES 2022

www.dynamicpapers.com

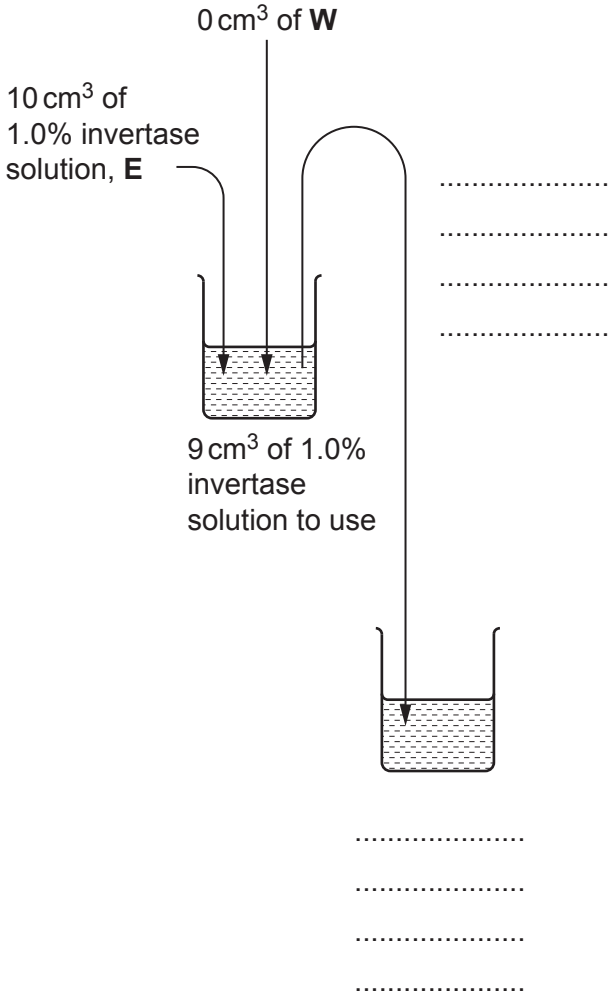

Fig. 1.1

[3]

www.dynamicpapers.com

step 12 Prepare the concentrations of invertase solution, **E**, as decided in **(b)(i)**, in the beakers provided.

step 13 Label test-tubes with the concentrations of invertase solution decided in **(b)(i)**.

step 14 Put 1 cm^3 of each of the concentrations of invertase into the appropriately labelled test-tube.

step 15 Add 1 cm^3 of the 30 $mmol\,dm^{-3}$ sucrose solution, **S**, to each of the test-tubes and shake gently to mix.

step 16 Start timing and leave the test-tubes at room temperature for 3 minutes.

(ii) Record room temperature.

room temperature = ...

[1]

step 17 After 3 minutes, add 2 cm^3 of **B** to each test-tube and shake gently to mix.

step 18 Put all of the test-tubes into the boiling water-bath and leave them for 2 minutes.

step 19 After 2 minutes, carefully remove the test-tubes from the water-bath and shake gently to mix the contents. Record your results in **(b)(iii)**.

(iii) Record your results in an appropriate table.

[4]

© UCLES 2022

www.dynamicpapers.com

(iv) Using your results in **(a)** and **(b)(iii)**, estimate the concentration of reducing sugar for the highest concentration of invertase solution (1%) **and** for the lowest concentration of invertase solution, including appropriate units.

highest concentration (1%) .....

lowest concentration .....

[2]

(v) Describe how changing the concentration of invertase affects the concentration of reducing sugar produced.

.....

.....

..... [1]

(vi) Suggest **and** explain how increasing the temperature by 10 °C above room temperature would affect the results you obtained in (**b)(iii)**.

.....

.....

.....

.....

.....

.....

.....

..... [3]

(vii) Complete Table 1.4 by identifying **two** significant sources of error in this investigation.

Suggest how you would improve the procedure to reduce the effect of these errors.

Table 1.4

source of error	improvement

[4]

[Total: 20]

www.dynamicpapers.com

2 **N1** is a slide of a stained transverse section through a plant stem.

(a) **(i)** Draw a large plan diagram of the region of the stem on **N1** indicated by the shaded area in Fig. 2.1. Use a sharp pencil.

Use **one** ruled label line and label to identify the epidermis.

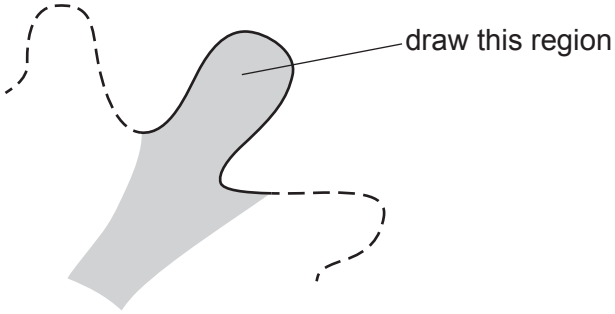

Fig. 2.1

[5]

© UCLES 2022

www.dynamicpapers.com

(ii) Observe the epidermis of the stem on **N1**.

Select a group of four adjacent cells in the epidermis.

Each cell must touch at least one other cell.

- Make a large drawing of this group of **four** cells.
- Use **one** ruled label line and label to identify the cell wall of **one** cell.

[5]

www.dynamicpapers.com

(b) A riparian plant is a type of plant that grows beside rivers and may disperse its seeds by releasing them into flowing water.

Researchers investigated the effect of seed length on the distance the seeds travelled along a river. Seeds of different length were released and the distance they had travelled after 24 hours was measured.

Table 2.1 shows the results of the investigation.

Table 2.1

seed length / mm	distance travelled / m			
	trial 1	trial 2	trial 3	mean
2.0	207	194	210	204
5.0	202	211	200	204
10.0	212	206	210	
15.0	219	213	217	216
20.0	231	389	221	226

(i) Table 2.1 includes an anomalous result.

Draw a circle around the anomalous result.

[1]

(ii) Calculate the mean distance travelled for the seeds of length 10.0 mm.

Show your working.

mean distance travelled ..... m
[2]

© UCLES 2022

www.dynamicpapers.com

(iii) Plot a graph of the mean data in Table 2.1 on the grid in Fig. 2.2.

Use a sharp pencil.

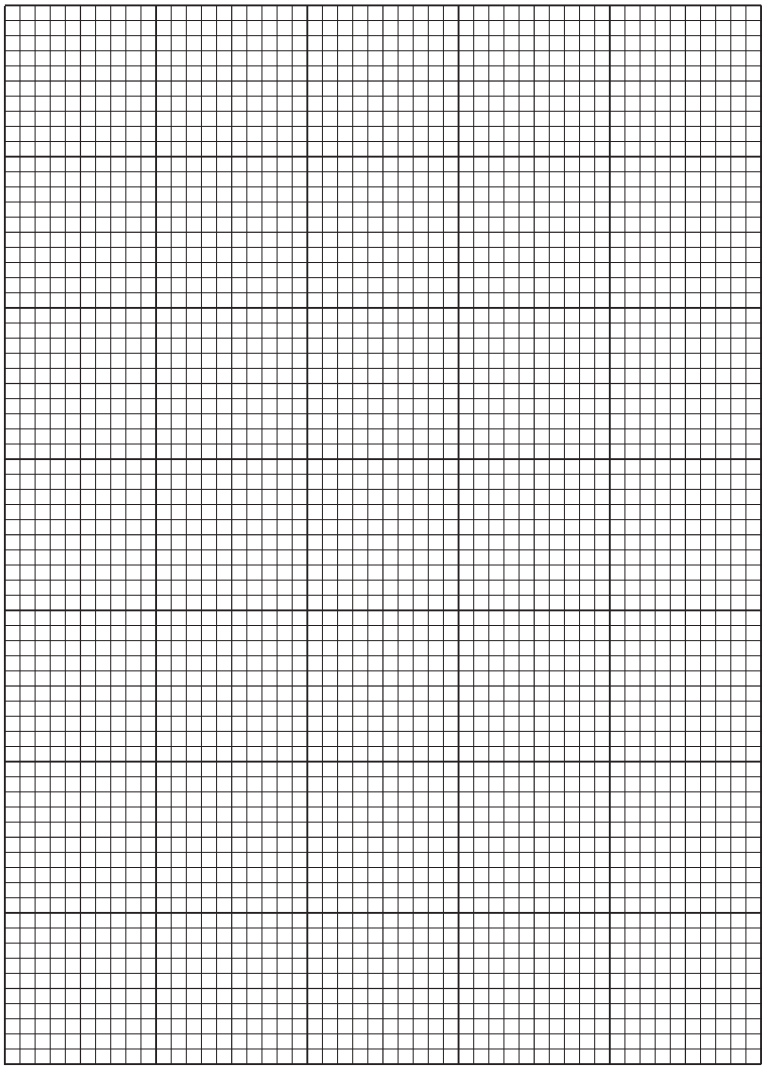

Fig. 2.2

[4]

www.dynamicpapers.com

(c) Fig. 2.3 is a photograph of the seed of a riparian plant.

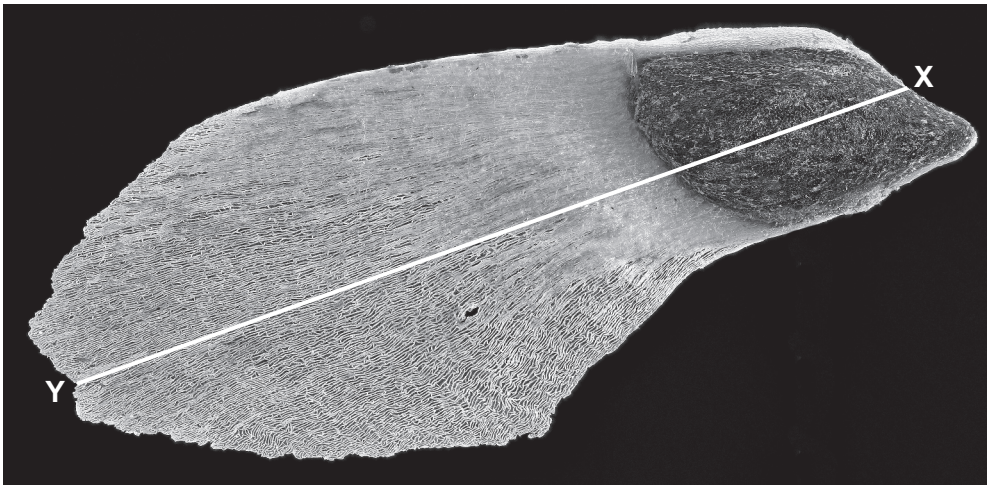

magnification ×55

Fig. 2.3

In Fig. 2.3, the line **X**–**Y** is drawn across the length of the seed.

Use the line **X**–**Y** and the magnification to calculate the actual length of the seed.

Show your working and use appropriate units.

actual length of seed = ...
[3]

[Total: 20]

Permission to reproduce items where third-party owned material protected by copyright is included has been sought and cleared where possible. Every reasonable effort has been made by the publisher (UCLES) to trace copyright holders, but if any items requiring clearance have unwittingly been included, the publisher will be pleased to make amends at the earliest possible opportunity.

To avoid the issue of disclosure of answer-related information to candidates, all copyright acknowledgements are reproduced online in the Cambridge Assessment International Education Copyright Acknowledgements Booklet. This is produced for each series of examinations and is freely available to download at www.cambridgeinternational.org after the live examination series.

Cambridge Assessment International Education is part of Cambridge Assessment. Cambridge Assessment is the brand name of the University of Cambridge Local Examinations Syndicate (UCLES), which is a department of the University of Cambridge.

© UCLES 2022