www.dynamicpapers.com

Cambridge
O Level

Cambridge International Examinations
Cambridge Ordinary Level

CANDIDATE NAME

CENTRE NUMBER

CANDIDATE NUMBER

5748052947

CHEMISTRY **5070/22**

Paper 2 Theory **October/November 2015**

1 hour 30 minutes

Candidates answer on the Question Paper.

No Additional Materials are required.

READ THESE INSTRUCTIONS FIRST

Write your Centre number, candidate number and name on all the work you hand in.
Write in dark blue or black pen.
You may use an HB pencil for any diagrams or graphs.
Do not use staples, paper clips, glue or correction fluid.
DO **NOT** WRITE IN ANY BARCODES.

Section A
Answer **all** questions.
Write your answers in the spaces provided in the Question Paper.

Section B
Answer any **three** questions.
Write your answers in the spaces provided in the Question Paper.

Electronic calculators may be used.
You may lose marks if you do not show your working or if you do not use appropriate units.
A copy of the Periodic Table is printed on page 20.

At the end of the examination, fasten all your work securely together.
The number of marks is given in brackets [ ] at the end of each question or part question.

This document consists of **20** printed pages.

© UCLES 2015

CAMBRIDGE International Examinations

www.dynamicpapers.com

Section A

Answer **all** the questions in this section in the spaces provided.

The total mark for this section is 45.

A1 Choose from the following elements to answer the questions below.

aluminium
argon
carbon
copper
iodine
iron
lead
magnesium
nitrogen
oxygen
sulfur

Each of these elements can be used once, more than once or not at all.

Which element

(a) has an ion which, in aqueous solution, reacts with aqueous sodium hydroxide to give a red-brown precipitate,

.....[1]

(b) has an atom with an electronic configuration with only five occupied electron shells,

.....[1]

(c) has an oxide which decolourises acidified potassium manganate(VII),

.....[1]

(d) has a sulfate which is insoluble in water,

.....[1]

(e) provides an inert atmosphere for the extraction of reactive metals,

.....[1]

(f) produces ammonia when it is warmed with an aqueous mixture of sodium nitrate and sodium hydroxide?

.....[1]

[Total: 6]

© UCLES 2015

www.dynamicpapers.com

A2 Plants contain many different types of carbon compounds.

(a) Carbon compounds are made in plants by photosynthesis.

Write the overall equation for photosynthesis and state the conditions required for this process.

.....

.....

.....[3]

(b) Starch is a polymer found in plants.
Starch can be hydrolysed.

(i) Give the name of the product formed when starch is hydrolysed.

.....[1]

(ii) Give the reagent and conditions needed to hydrolyse starch.

.....[2]

www.dynamicpapers.com

(c) When wood chips are heated in the absence of air, a colourless distillate is formed.

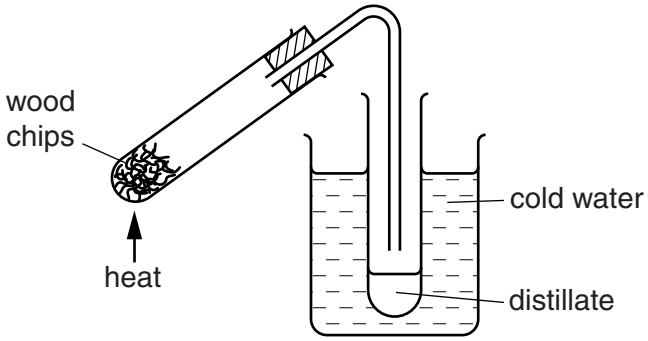

The distillate contains ethanoic acid, esters and other organic compounds.

(i) Ethanoic acid reacts with calcium hydroxide to form a salt and water.

Give the name and formula of the salt formed.

name .....

formula .....[2]

(ii) One of the esters in the distillate has the molecular formula, $C_4H_8O_2$.

Draw the structure of an ester with this formula, showing all the atoms and all the bonds.

[1]

© UCLES 2015

www.dynamicpapers.com

(iii) The distillate also contains a compound with the following composition.

element	percentage by mass
carbon	37.5
hydrogen	12.5
oxygen	50.0

Deduce the empirical formula of this compound.

empirical formula .....[2]

[Total: 11]

www.dynamicpapers.com

A3 Water for use in the home is treated using carbon and chlorine.

(a) Explain the purpose of using carbon and chlorine in water treatment.

carbon.....

chlorine .....[2]

(b) In some parts of the world, drinking water is purified by desalination.

What is meant by the term *desalination*?

.....[1]

(c) River water may contain pollutants from agricultural sources.
These pollutants may cause eutrophication.

Give the names of two anions present in fertilisers which contribute to eutrophication.

..... and ..... [1]

(d) An aqueous solution of barium chloride is added to a sample of water which contains sulfate ions. A white precipitate forms.

Construct an ionic equation, including state symbols, for this reaction.

.....[2]

[Total: 6]

© UCLES 2015

www.dynamicpapers.com

A4 Iron is extracted in a blast furnace. The raw materials required are

- iron ore, which contains iron(III) oxide, Fe_2O_3,
- limestone,
- coke (carbon),
- air.

(a) The coke first burns in air to form carbon dioxide.
The carbon dioxide is then reduced by coke to produce carbon monoxide.
The carbon monoxide reduces the iron(III) oxide to iron.

Write equations for

(i) the reduction of carbon dioxide by coke,

.....[1]

(ii) the reduction of iron(III) oxide to iron by carbon monoxide.

.....[1]

(b) Why is limestone added to the blast furnace?

.....[1]

(c) Another ore of iron contains an oxide with the formula Fe_3O_4.

Calculate the percentage by mass of iron in Fe_3O_4.

[2]

www.dynamicpapers.com

(d) Iron can be obtained by the electrolysis of an aqueous acidified solution of iron(II) sulfate. The reactions at the electrodes are given.

at the anode (positive electrode): $4OH^- \rightarrow O_2 + 2H_2O + 4e^-$

at the cathode (negative electrode): $Fe^{2+} + 2e^- \rightarrow Fe$

Which reaction is oxidation and which is reduction? Explain your answer.

.....

.....

.....[2]

(e) Attaching magnesium strips to the iron hulls of ships can lower their rate of rusting.

Explain how the magnesium stops the iron from rusting.

.....

.....

.....

.....[2]

(f) Aqueous iron(II) chloride is one of the products formed when iron reacts with hydrochloric acid.

Construct an equation for this reaction.

.....[1]

[Total: 10]

© UCLES 2015

www.dynamicpapers.com

A5 (a) Two students set up tubes as shown.

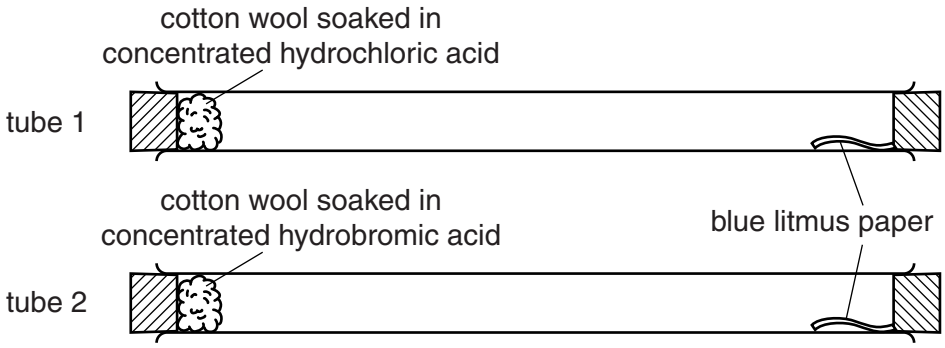

Concentrated hydrochloric acid produces fumes of hydrogen chloride.
Concentrated hydrobromic acid produces fumes of hydrogen bromide.

Four minutes after setting up the experiment, the litmus paper in tube 1 turns red.
Seven minutes after setting up the experiment, the litmus paper in tube 2 turns red.

Use the kinetic particle theory to explain

(i) how the gases move through the tubes,

.....

.....

.....

.....[2]

(ii) why the gases take different times to reach the litmus paper.

.....

.....[1]

© UCLES 2015

[Turn over

www.dynamicpapers.com

(b) A gas syringe is filled with 80 cm^3 of hydrogen chloride gas at 20 °C.
The syringe is placed in some hot water at 50 °C.
The atmospheric pressure does not change but the volume of the gas in the syringe increases to 88 cm^3.

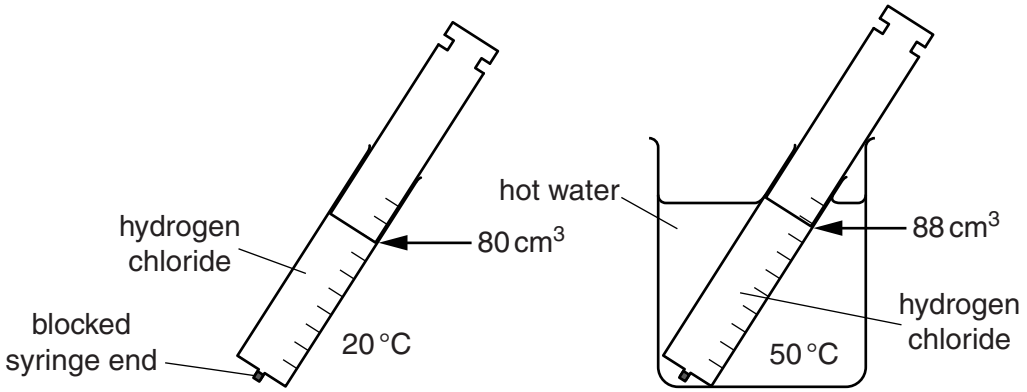

Use the kinetic particle theory to explain why the volume increases.

.....

.....

.....

.....[2]

[Total: 5]

© UCLES 2015

www.dynamicpapers.com

A6 When one mole of sulfur burns, 247 kJ of energy is released.

$$S(s) + O_2(g) \rightarrow SO_2(g)$$

(a) Calculate the energy released when 9.60 g of sulfur is burnt.

[2]

(b) When sulfur dioxide is passed through aqueous sodium hydroxide, sodium hydrogensulfite is formed. Sodium hydrogensulfite contains the hydrogensulfite ion, HSO_3^-.

Construct the ionic equation for this reaction.

.....[1]

(c) The hydrogensulfite ion is a weaker acid than ethanoic acid.

Samples of 0.1 g of magnesium are added separately to 0.1 mol/dm^3 ethanoic acid and 0.1 mol/dm^3 hydrogensulfite ions.

Explain why the reaction is faster with ethanoic acid.

.....

.....

.....

.....[2]

(d) Calculate the volume of 0.10 mol/dm^3 sodium hydroxide which contains 3.2 g of sodium hydroxide.

volume of aqueous sodium hydroxide = ... cm^3 [2]

[Total: 7]

© UCLES 2015

[Turn over

www.dynamicpapers.com

Section B

Answer **three** questions from this section in the spaces provided.

The total mark for this section is 30.

B7 The structures of diamond and silicon dioxide are shown.

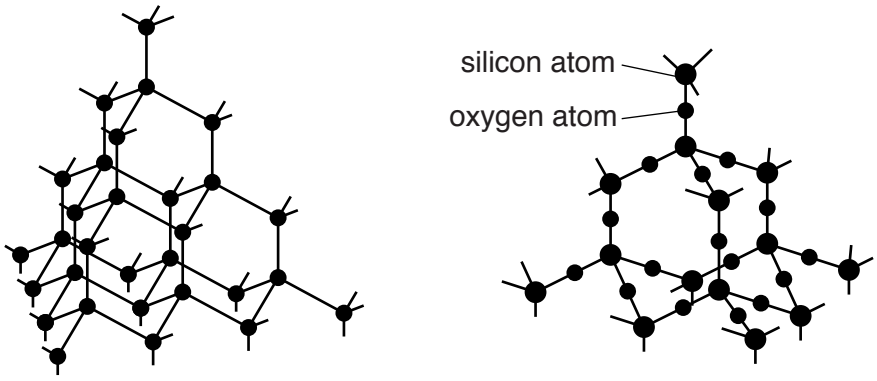

diamond silicon dioxide

(a) Describe one similarity in the structures of diamond and silicon dioxide.

.....[1]

(b) Explain why silicon dioxide has a high melting point.

.....

.....[2]

(c) Silicon dioxide reacts with hot concentrated sodium hydroxide to form sodium silicate, Na_2SiO_3.

Deduce the formula of the silicate ion.

.....[1]

(d) Explain why diamond does not conduct electricity.

.....[1]

(e) Graphite is a form of carbon which conducts electricity.
Graphite is used as electrodes in electrolysis.

What is the meaning of the term *electrolysis*?

.....

.....[1]

© UCLES 2015

www.dynamicpapers.com

(f) Aluminium is extracted by the electrolysis of molten aluminium oxide dissolved in cryolite.

Construct the equation for the reaction at

(i) the anode (positive electrode),

.....[1]

(ii) the cathode (negative electrode).

.....[1]

(g) An isotope of silicon is represented by the symbol $^{29}_{14}Si$.

Deduce the number of protons and neutrons in this isotope.

number of protons .....

number of neutrons .....[1]

(h) Silicon has a relative atomic mass of 28.

Define the term *relative atomic mass*.

.....

.....[1]

[Total: 10]

www.dynamicpapers.com

B8 Chlorine reacts with sodium hydroxide.

$$Cl_2(g) + 2NaOH(aq) \rightarrow NaCl(aq) + NaClO(aq) + H_2O(l)$$

(a) A volume of 144 cm^3 of chlorine gas, measured at room temperature and pressure, is passed into 38.0 cm^3 of 0.250 mol/dm^3 sodium hydroxide.

Show by calculation which reactant is in excess.

[3]

(b) Chlorine displaces bromine from an aqueous solution of potassium bromide.

(i) Construct the equation for this reaction.

.....[2]

(ii) Explain why bromine does not react with aqueous potassium chloride.

.....

.....[1]

(iii) Give the charge of a chloride ion and its electronic configuration.

charge .....

electronic configuration .....[2]

(c) Explain why sodium chloride does not conduct electricity when solid but does conduct electricity when molten.

.....

.....

.....[2]

[Total: 10]

© UCLES 2015

www.dynamicpapers.com

Question B9 begins on page 16.

www.dynamicpapers.com

B9 When rubber is heated in the absence of air, a small amount of isoprene is formed. The structure of isoprene is shown.

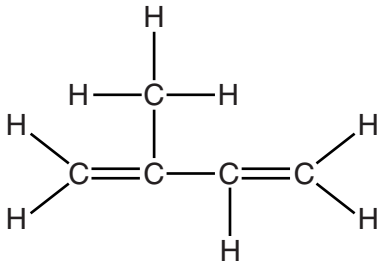

(a) Isoprene is an unsaturated hydrocarbon.

Describe a test for an unsaturated hydrocarbon.

.....

.....[2]

(b) Isoprene is a liquid at 25 °C.

Describe the arrangement and motion of the particles in isoprene at 25 °C.

.....

.....[2]

(c) Isoprene reacts with sulfur dioxide to form methylsulfolene.

$$\underset{\text{isoprene}}{C_5H_8} + SO_2 \rightarrow \underset{\text{methylsulfolene}}{C_5H_8SO_2}$$

Calculate the maximum mass of methylsulfolene that can be formed from 100 g of isoprene.

mass of methylsulfolene = ... g [3]

© UCLES 2015

www.dynamicpapers.com

(d) (i) What feature of the isoprene molecule is responsible for it forming an addition polymer?

.....[1]

(ii) *Perspex* is also an addition polymer.
The diagram shows part of the polymer chain of *Perspex*.

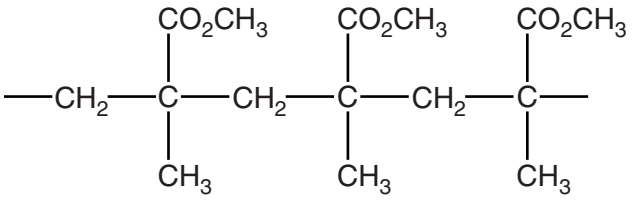

Deduce the formula of the monomer used to make *Perspex*.

[2]

[Total: 10]

www.dynamicpapers.com

B10 At 200 °C and 200 atmospheres pressure, phosphorus(V) chloride forms an equilibrium mixture with phosphorus(III) chloride and chlorine.

$$\underset{\text{phosphorus(V) chloride}}{PCl_5(g)} \rightleftharpoons \underset{\text{phosphorus(III) chloride}}{PCl_3(g)} + Cl_2(g)$$

(a) Predict and explain the effect of decreasing the pressure on the position of this equilibrium. The temperature remains constant.

.....

.....

.....[2]

(b) Predict and explain the effect of increasing the concentration of chlorine on the position of this equilibrium.

.....

.....

.....[2]

(c) The table shows the percentage of phosphorus(III) chloride in the equilibrium mixture at different temperatures. The pressure is the same in each case.

temperature / °C	% PCl_3 in the mixture
200	48
300	95
400	99

(i) Describe how the composition of this equilibrium mixture changes with temperature.

.....

.....[1]

(ii) Explain what this tells you about the energy change in this reaction.

.....

.....[1]

© UCLES 2015

www.dynamicpapers.com

(d) How is the position of equilibrium affected by the presence of a catalyst?

.....[1]

(e) The rate of this reaction increases with increase in temperature.
Explain why.

.....

.....

.....

.....[2]

(f) Phosphorus(V) chloride reacts with water. Phosphoric acid, H_3PO_4, and hydrogen chloride are formed.

Construct the equation for this reaction.

.....[1]

[Total: 10]

Permission to reproduce items where third-party owned material protected by copyright is included has been sought and cleared where possible. Every reasonable effort has been made by the publisher (UCLES) to trace copyright holders, but if any items requiring clearance have unwittingly been included, the publisher will be pleased to make amends at the earliest possible opportunity.

To avoid the issue of disclosure of answer-related information to candidates, all copyright acknowledgements are reproduced online in the Cambridge International Examinations Copyright Acknowledgements Booklet. This is produced for each series of examinations and is freely available to download at www.cie.org.uk after the live examination series.

Cambridge International Examinations is part of the Cambridge Assessment Group. Cambridge Assessment is the brand name of University of Cambridge Local Examinations Syndicate (UCLES), which is itself a department of the University of Cambridge.

© UCLES 2015

DATA SHEET
The Periodic Table of the Elements

Group I	Group II											Group III	Group IV	Group V	Group VI	Group VII	Group 0
							1 **H** Hydrogen 1										4 **He** Helium 2
7 **Li** Lithium 3	9 **Be** Beryllium 4											11 **B** Boron 5	12 **C** Carbon 6	14 **N** Nitrogen 7	16 **O** Oxygen 8	19 **F** Fluorine 9	20 **Ne** Neon 10
23 **Na** Sodium 11	24 **Mg** Magnesium 12											27 **Al** Aluminium 13	28 **Si** Silicon 14	31 **P** Phosphorus 15	32 **S** Sulfur 16	35.5 **Cl** Chlorine 17	40 **Ar** Argon 18
39 **K** Potassium 19	40 **Ca** Calcium 20	45 **Sc** Scandium 21	48 **Ti** Titanium 22	51 **V** Vanadium 23	52 **Cr** Chromium 24	55 **Mn** Manganese 25	56 **Fe** Iron 26	59 **Co** Cobalt 27	59 **Ni** Nickel 28	64 **Cu** Copper 29	65 **Zn** Zinc 30	70 **Ga** Gallium 31	73 **Ge** Germanium 32	75 **As** Arsenic 33	79 **Se** Selenium 34	80 **Br** Bromine 35	84 **Kr** Krypton 36
85 **Rb** Rubidium 37	88 **Sr** Strontium 38	89 **Y** Yttrium 39	91 **Zr** Zirconium 40	93 **Nb** Niobium 41	96 **Mo** Molybdenum 42	**Tc** Technetium 43	101 **Ru** Ruthenium 44	103 **Rh** Rhodium 45	106 **Pd** Palladium 46	108 **Ag** Silver 47	112 **Cd** Cadmium 48	115 **In** Indium 49	119 **Sn** Tin 50	122 **Sb** Antimony 51	128 **Te** Tellurium 52	127 **I** Iodine 53	131 **Xe** Xenon 54
133 **Cs** Caesium 55	137 **Ba** Barium 56	139 **La** Lanthanum 57 *	178 **Hf** Hafnium 72	181 **Ta** Tantalum 73	184 **W** Tungsten 74	186 **Re** Rhenium 75	190 **Os** Osmium 76	192 **Ir** Iridium 77	195 **Pt** Platinum 78	197 **Au** Gold 79	201 **Hg** Mercury 80	204 **Tl** Thallium 81	207 **Pb** Lead 82	209 **Bi** Bismuth 83	209 **Po** Polonium 84	210 **At** Astatine 85	222 **Rn** Radon 86
223 **Fr** Francium 87	226 **Ra** Radius 88	227 **Ac** Actinium 89 †															

140 **Ce** Cerium 58	141 **Pr** Praseodymium 59	144 **Nd** Neodymium 60	147 **Pm** Promethium 61	150 **Sm** Samarium 62	152 **Eu** Europium 63	157 **Gd** Gadolinium 64	159 **Tb** Terbium 65	162 **Dy** Dysprosium 66	165 **Ho** Holmium 67	167 **Er** Erbium 68	169 **Tm** Thulium 69	173 **Yb** Ytterbium 70	175 **Lu** Lutetium 71
232 **Th** Thorium 90	231 **Pa** Protactinium 91	238 **U** Uranium 92	237 **Np** Neptunium 93	244 **Pu** Plutonium 94	243 **Am** Americium 95	247 **Cm** Curium 96	247 **Bk** Berkelium 97	251 **Cf** Californium 98	252 **Es** Einsteinium 99	257 **Fm** Fermium 100	258 **Md** Mendelevium 101	259 **No** Nobelium 102	260 **Lr** Lawrencium 103

* 58–71 Lanthanoid series
† 90–103 Actinoid series

Key

a	a = relative atomic mass
X	**X** = atomic symbol
b	b = atomic (proton) number

The volume of one mole of any gas is 24 dm^3 at room temperature and pressure (r.t.p.).

www.dynamicpapers.com