* 0000800000001 * DFD
www.dynamicpapers.com

Cambridge Assessment International Education

Cambridge O Level

CANDIDATE NAME

CENTRE NUMBER | | | | | |

CANDIDATE NUMBER | | | | |

140221068 5

PHYSICS **5054/41**

Paper 4 Alternative to Practical **October/November 2025**

1 hour

You must answer on the question paper.

No additional materials are needed.

INSTRUCTIONS

- Answer **all** questions.
- Use a black or dark blue pen. You may use an HB pencil for any diagrams or graphs.
- Write your name, centre number and candidate number in the boxes at the top of the page.
- Write your answer to each question in the space provided.
- Do **not** use an erasable pen or correction fluid.
- Do **not** write on any bar codes.
- You may use a calculator.
- You should show all your working and use appropriate units.

INFORMATION

- The total mark for this paper is 40.
- The number of marks for each question or part question is shown in brackets [ ].

This document has **16** pages. Any blank pages are indicated.

© UCLES 2025

[Turn over

www.dynamicpapers.com

1 A student measures the efficiency of a small electric heater.

(a) The student is provided with the circuit shown in Fig. 1.1. The coil of wire is the small electric heater.

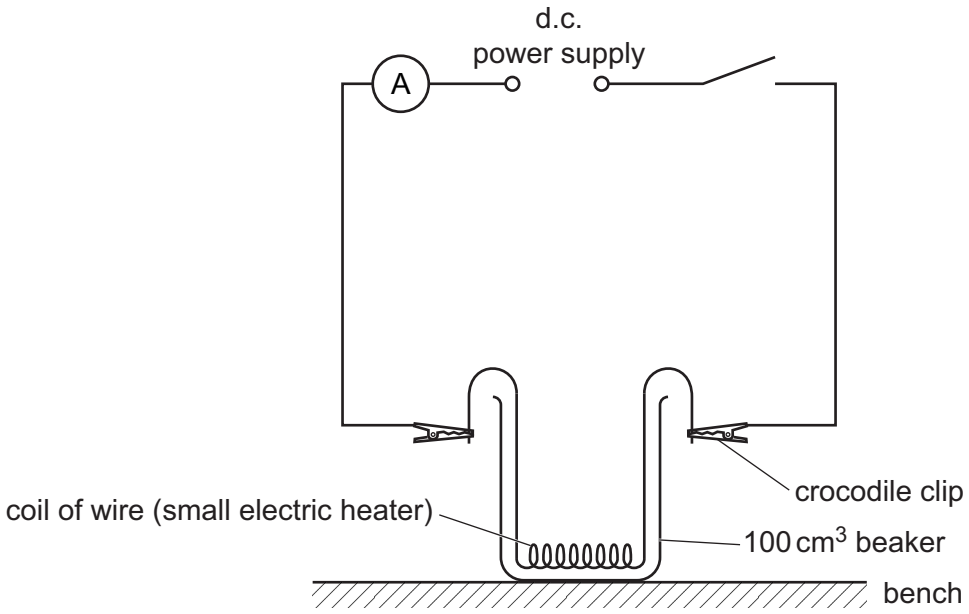

Fig. 1.1

Draw on the circuit in Fig. 1.1 to show a voltmeter connected to measure the potential difference across the heater. [1]

DO NOT WRITE IN THIS MARGIN
DO NOT WRITE IN THIS MARGIN
DO NOT WRITE IN THIS MARGIN
DO NOT WRITE IN THIS MARGIN
DO NOT WRITE IN THIS MARGIN

DO NOT WRITE IN THIS MARGIN
DO NOT WRITE IN THIS MARGIN
DO NOT WRITE IN THIS MARGIN
DO NOT WRITE IN THIS MARGIN
DO NOT WRITE IN THIS MARGIN

(b) (i) The student is also provided with:

- a thermometer
- a stirrer
- a measuring cylinder containing water at room temperature
- a stopwatch.

Fig. 1.2 shows the volume of water *W* in the measuring cylinder.

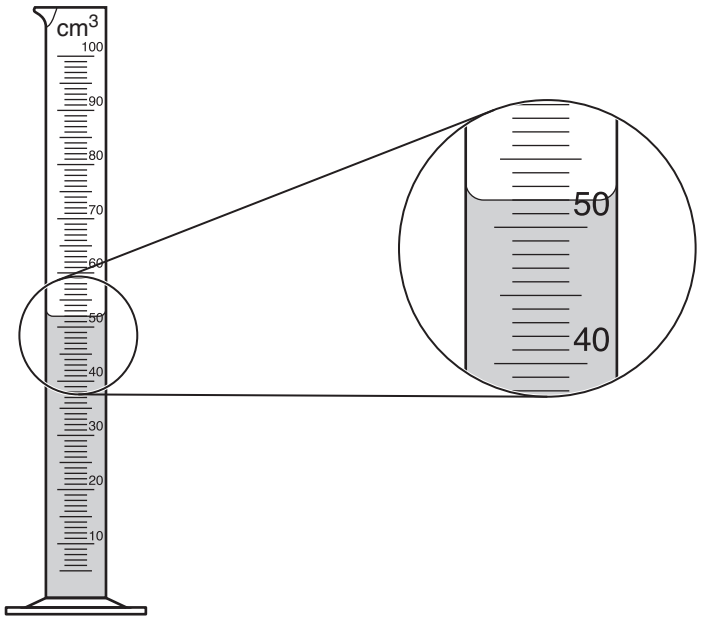

Fig. 1.2

Record the volume of water *W*.

W = ... cm^3 [1]

(ii) The student:

- pours the water from the measuring cylinder into the beaker containing the heater
- makes sure that the heater is covered by water
- closes the switch
- records the readings on the voltmeter and ammeter
- opens the switch.

Fig. 1.3 shows the reading on the voltmeter and on the ammeter when the switch is closed.

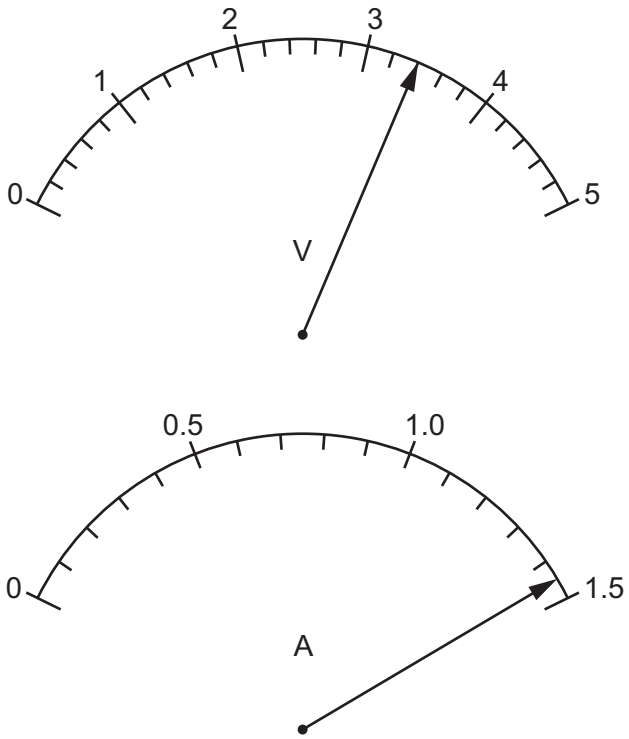

Fig. 1.3

Record the potential difference V and the current I.

V = ... V

I = ... A

[1]

DO NOT WRITE IN THIS MARGIN
DO NOT WRITE IN THIS MARGIN
DO NOT WRITE IN THIS MARGIN
DO NOT WRITE IN THIS MARGIN
DO NOT WRITE IN THIS MARGIN

www.dynamicpapers.com

(c) (i) The thermometer is placed in the water in the beaker.

Fig. 1.4 shows the initial temperature θ_0 of the water.

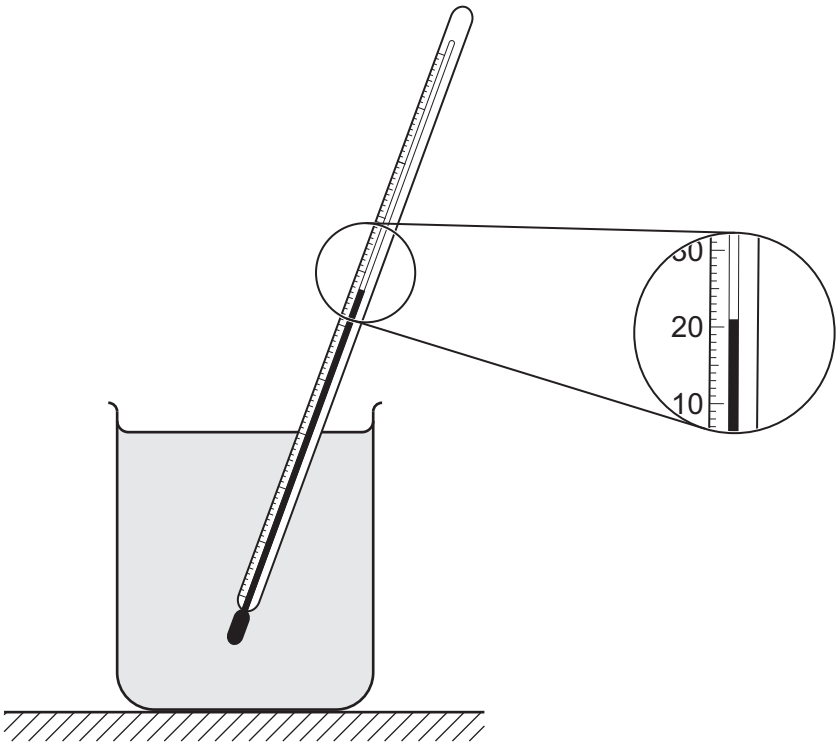

Fig. 1.4

Record the initial temperature θ_0 of the water in the beaker.

θ_0 = ... °C [1]

DO NOT WRITE IN THIS MARGIN
DO NOT WRITE IN THIS MARGIN
DO NOT WRITE IN THIS MARGIN
DO NOT WRITE IN THIS MARGIN
DO NOT WRITE IN THIS MARGIN

(ii) The student:

- closes the switch and immediately starts the stopwatch
- leaves the heater switched on for 5 minutes
- stirs the water while the heater is switched on
- opens the switch
- continues to stir the water for a further minute
- records the final temperature θ_F.

The final temperature θ_F is 24.5 °C.

Calculate the temperature change $\Delta\theta$.

Use the equation shown.

$$\Delta\theta = \theta_F - \theta_0$$

$\Delta\theta$ = ... °C [1]

(iii) Explain why the student continues to stir the water for a further minute after the heater is switched off.

.....

..... [1]

(d) (i) The energy Q_H supplied by the heater is given by

$$Q_H = I \times V \times t$$

where t = 300 s.

Calculate Q_H. Show your working.

Q_H = ... J [1]

(ii) The energy Q_W gained by the water is given by the equation shown.

$$Q_W = W \times 4.2 \times \Delta\theta$$

Calculate Q_W using your value of W from **(b)(i)** and your value of $\Delta\theta$ from **(c)(ii)**. Show your working.

Q_W = ... J [1]

DO NOT WRITE IN THIS MARGIN

www.dynamicpapers.com

(iii) The efficiency of the heater is given by the equation shown.

$$\text{efficiency} = \frac{Q_W}{Q_H}$$

Calculate the efficiency of the heater. Show your working.

efficiency = ... [1]

(e) Suggest one change that can be made to the apparatus used in this investigation that will increase the efficiency of the heater.

.....

..... [1]

[Total: 10]

DO NOT WRITE IN THIS MARGIN
DO NOT WRITE IN THIS MARGIN
DO NOT WRITE IN THIS MARGIN
DO NOT WRITE IN THIS MARGIN
DO NOT WRITE IN THIS MARGIN

www.dynamicpapers.com

2 A student investigates the refraction of light through a transparent block.

(a) (i) Fig. 2.1 shows a top view of the transparent block.

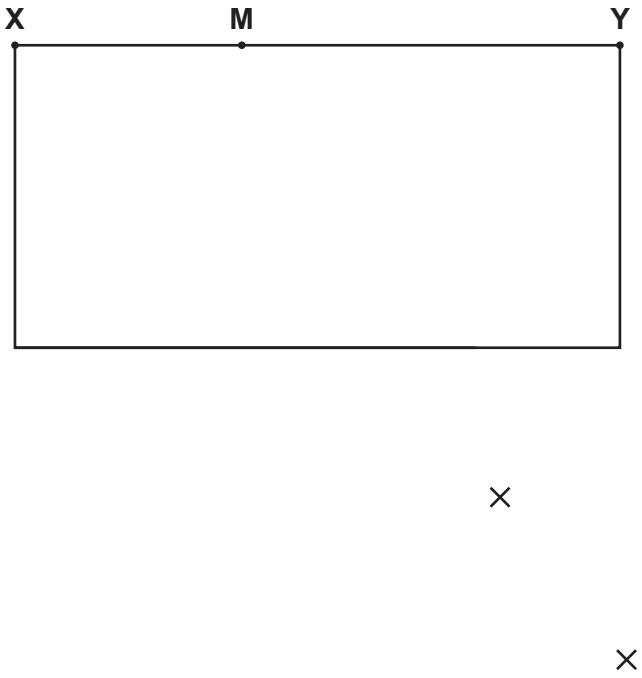

Fig. 2.1

On Fig. 2.1, draw a normal to the line **XY** at point **M** and extend it above and below the line **XY**. [1]

(ii) Draw a line from **M** at an angle of 40° to the normal to the left of the normal above line **XY** so that the angle between the drawn line and the normal is 40°. The 40° angle is the angle of incidence.

Label the top left-hand end of the line as point **L**. [1]

(b) (i) The student uses an illuminated slit to shine a narrow ray of light along the line **LM**.

The student marks the emerging ray with two crosses as shown in Fig. 2.1.

Join the marked crosses and extend the line to meet the lower end of the outline of the block. Label this as point **P**. [1]

(ii) Join the points **M** and **P** with a straight line. [1]

© UCLES 2025

DO NOT WRITE IN THIS MARGIN
DO NOT WRITE IN THIS MARGIN
DO NOT WRITE IN THIS MARGIN
DO NOT WRITE IN THIS MARGIN
DO NOT WRITE IN THIS MARGIN

DO NOT WRITE IN THIS MARGIN
DO NOT WRITE IN THIS MARGIN
DO NOT WRITE IN THIS MARGIN
DO NOT WRITE IN THIS MARGIN
DO NOT WRITE IN THIS MARGIN

(iii) The angle of refraction r is the angle between the line **MP** and the normal drawn in **(a)(i)**.

Measure and record angle r.

r = ... ° [1]

(c) The refractive index n of the transparent block is given by the equation shown.

$$n = \frac{\sin 40°}{\sin r}$$

Calculate n and give your answer to 2 significant figures.

n = ... [2]

(d) Suggest how you could change the experiment to make sure that your value of n is accurate.

.....

.....

..... [1]

(e) Theory states that the angle between the emerging ray and the normal at the point that the ray emerges should be the same as the angle of incidence.

In **(a)(i)**, the angle of incidence is given as 40°.

Add another normal to your diagram.

Measure and record the angle α between the emerging ray and the normal.

α = ... °

Explain whether your measurements agree with this theory.

.....

.....

..... [2]

[Total: 10]

www.dynamicpapers.com

3 A student measures the average mass of a marble (glass ball) and investigates the speed of a marble rolling down a slope.

(a) (i) The student:

- places a small empty dish on a top pan balance.

Fig. 3.1 shows the reading on the balance.

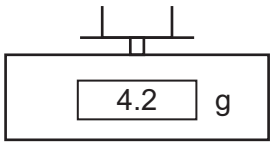

Fig. 3.1

- adds 5 marbles to the dish.

Fig. 3.2 shows the new reading on the balance.

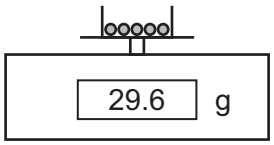

Fig. 3.2

Use the readings from Fig. 3.1 and Fig. 3.2 to calculate the mass of the 5 marbles.

Show your working.

mass of 5 marbles = ... g [1]

(ii) Calculate the average mass of 1 marble.

average mass of 1 marble = ... g [1]

DO NOT WRITE IN THIS MARGIN
DO NOT WRITE IN THIS MARGIN
DO NOT WRITE IN THIS MARGIN
DO NOT WRITE IN THIS MARGIN
DO NOT WRITE IN THIS MARGIN

© UCLES 2025

DO NOT WRITE IN THIS MARGIN
DO NOT WRITE IN THIS MARGIN
DO NOT WRITE IN THIS MARGIN
DO NOT WRITE IN THIS MARGIN
DO NOT WRITE IN THIS MARGIN

(b) (i) The student uses the apparatus shown in Fig. 3.3.

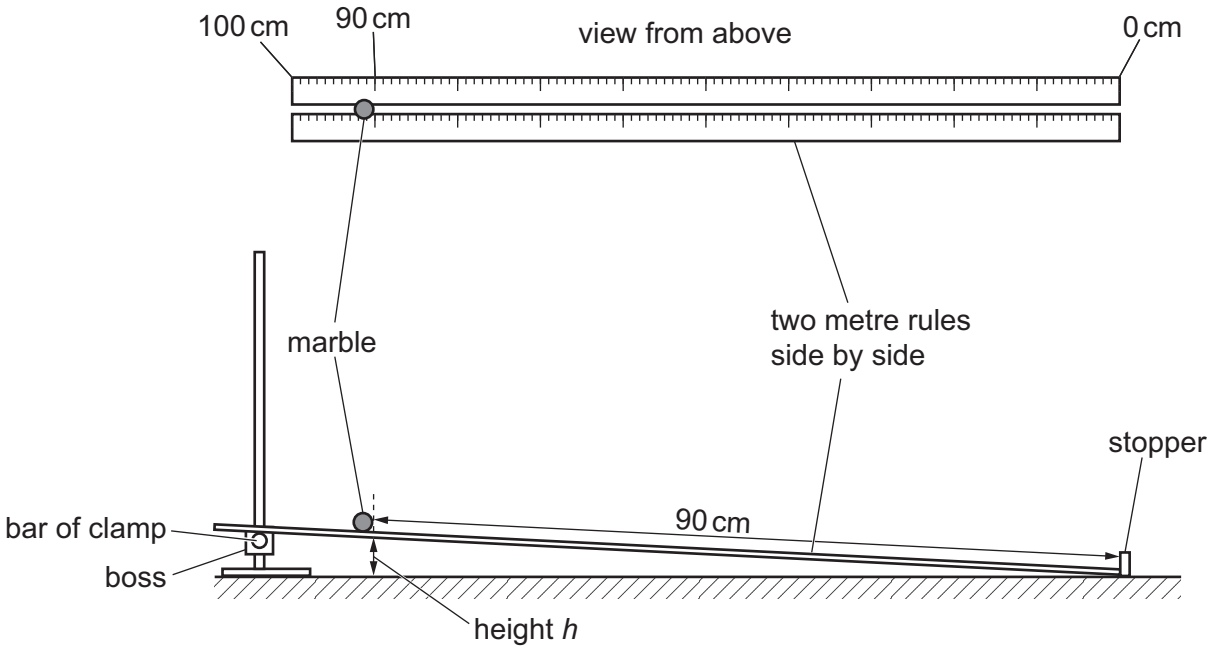

Fig. 3.3

The distance between the bench and the bottom side of the rule at the 90 cm mark is h.

The ramp is initially arranged with height h = 4.0 cm above the bench.

procedure

The student:

- places a marble on the gap between the rules so that its right-hand edge is on the 90.0 cm mark
- releases the marble and records the time t_1 for the marble to roll down the ramp until it hits the stopper
- repeats the experiment two more times.

The second and third measurements of time are recorded as t_2 and t_3.

Times t_1, t_2 and t_3 are shown.

$$t_1 = 2.16\,\text{s} \quad t_2 = 2.23\,\text{s} \quad t_3 = 2.25\,\text{s}$$

Calculate the average time t_{av} for the marble to travel 90.0 cm down the ramp.

t_{av} = ... s [1]

(ii) The procedure in **(b)(i)** is repeated for heights h = 6.0 cm, 8.0 cm, 10.0 cm and 12.0 cm. All results are recorded in Table 3.1.

Complete Table 3.1, finding the average time t_{av} for each value of h.

Include the results from **(b)(i)** in the table.

Give all values to a suitable number of decimal places.

Table 3.1

h / cm	t_1 / s	t_2 / s	t_3 / s	t_{av} / s
4.0	.....	.....	.....	.....
6.0	2.04	1.94	1.91	.....
8.0	1.75	1.82	1.70	.....
10.0	1.46	1.42	1.38	.....
12.0	1.36	1.23	1.31	.....

[2]

(iii) On the grid provided in Fig. 3.4 on page 13, plot a graph of t_{av} / s on the y-axis against h / cm on the x-axis.

Draw a line of best fit through your points. You do not need to start your axes at (0, 0). [4]

(iv) Describe the relationship between h and t_{av}.

.....

..... [1]

(c) (i) Use your graph to find t_{av} when h = 7.0 cm.

Show on the graph how you find t_{av} for h = 7.0 cm.

t_{av} = ... s [2]

(ii) The average speed v of the marble is given by:

$$v = \frac{0.90}{t_{av}}$$

Find the average speed v of the marble when h = 7.0 cm. Give the unit of your answer.

average speed v = ... unit ..... [2]

DO NOT WRITE IN THIS MARGIN

www.dynamicpapers.com

DO NOT WRITE IN THIS MARGIN
DO NOT WRITE IN THIS MARGIN
DO NOT WRITE IN THIS MARGIN
DO NOT WRITE IN THIS MARGIN
DO NOT WRITE IN THIS MARGIN

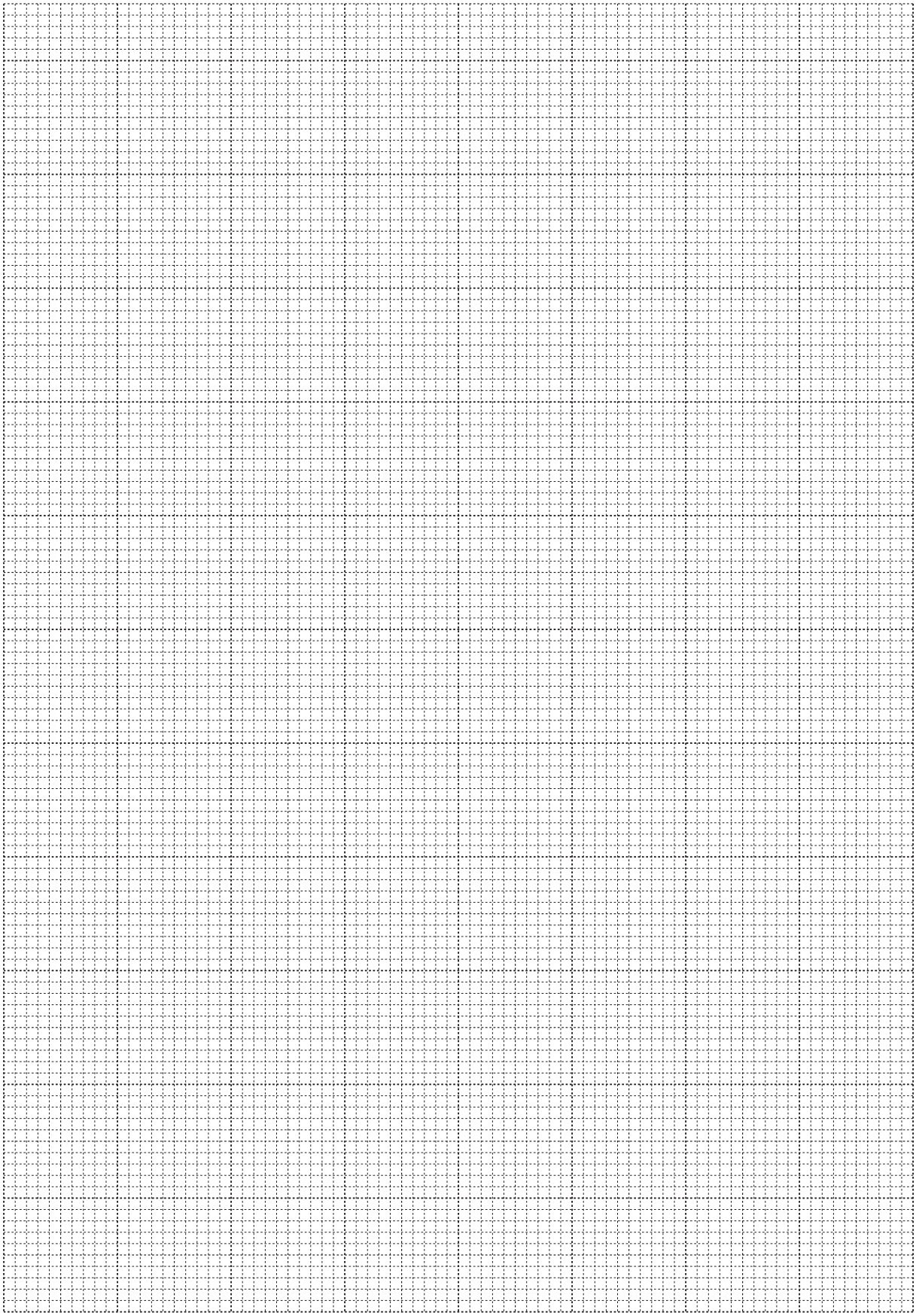

Fig. 3.4

[Total: 14]

4 A solar cell is a device that can generate electrical power when light falls on it.

You are given a solar cell connected to a fixed resistor as in the incomplete circuit shown in Fig. 4.1.

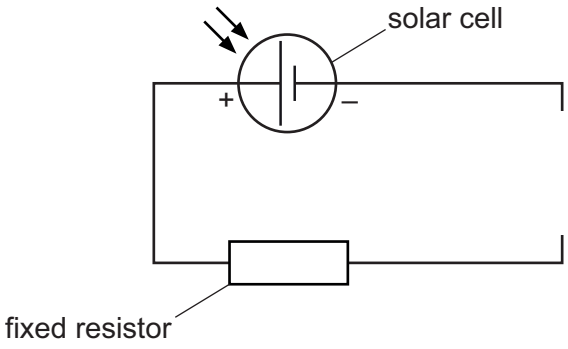

Fig. 4.1

Plan an experiment to investigate how the brightness of the light falling on the solar cell affects the electrical power output of the solar cell.

The power of the cell can be found using the equation:

power = current × voltage

The following apparatus is available in addition to the apparatus shown in the circuit diagram:

- a lamp connected to a power supply
- a metre rule
- a voltmeter
- an ammeter
- connecting leads.

Other apparatus normally available in a school laboratory can also be used.

In your plan, you should:

- explain how you will vary the brightness of the light falling on the solar cell
- show how the voltmeter and ammeter are used (you may draw on Fig. 4.1 to aid your explanation)
- state any variable(s) that you will control
- draw a table, with column headings, to show how to display your measurements (you are not required to enter any measurements in the table)
- explain how to use your measurements to reach a conclusion.

DO NOT WRITE IN THIS MARGIN
DO NOT WRITE IN THIS MARGIN
DO NOT WRITE IN THIS MARGIN
DO NOT WRITE IN THIS MARGIN
DO NOT WRITE IN THIS MARGIN

www.dynamicpapers.com

DO NOT WRITE IN THIS MARGIN
DO NOT WRITE IN THIS MARGIN
DO NOT WRITE IN THIS MARGIN
DO NOT WRITE IN THIS MARGIN
DO NOT WRITE IN THIS MARGIN

.....

.....

.....

.....

.....

.....

.....

.....

.....

.....

.....

.....

.....

.....

.....

.....

.....

..... [6]

www.dynamicpapers.com

BLANK PAGE

DO NOT WRITE IN THIS MARGIN
DO NOT WRITE IN THIS MARGIN
DO NOT WRITE IN THIS MARGIN
DO NOT WRITE IN THIS MARGIN
DO NOT WRITE IN THIS MARGIN

Permission to reproduce items where third-party owned material protected by copyright is included has been sought and cleared where possible. Every reasonable effort has been made by the publisher (UCLES) to trace copyright holders, but if any items requiring clearance have unwittingly been included, the publisher will be pleased to make amends at the earliest possible opportunity.

To avoid the issue of disclosure of answer-related information to candidates, all copyright acknowledgements are reproduced online in the Cambridge Assessment International Education Copyright Acknowledgements Booklet. This is produced for each series of examinations and is freely available to download at www.cambridgeinternational.org after the live examination series.

Cambridge Assessment International Education is part of Cambridge Assessment. Cambridge Assessment is the brand name of the University of Cambridge Local Examinations Syndicate (UCLES), which is a department of the University of Cambridge.

© UCLES 2025