* 0000800000001 * DFD
www.dynamicpapers.com

Cambridge Assessment International Education

Cambridge O Level

CANDIDATE NAME

CENTRE NUMBER

CANDIDATE NUMBER

7723202572

PHYSICS **5054/31**

Paper 3 Practical Test **October/November 2025**

1 hour 30 minutes

You must answer on the question paper.

You will need: The materials and apparatus listed in the confidential instructions

INSTRUCTIONS

- Answer **all** questions.
- Use a black or dark blue pen. You may use an HB pencil for any diagrams or graphs.
- Write your name, centre number and candidate number in the boxes at the top of the page.
- Write your answer to each question in the space provided.
- Do **not** use an erasable pen or correction fluid.
- Do **not** write on any bar codes.
- You may use a calculator.
- You should show all your working and use appropriate units.

INFORMATION

- The total mark for this paper is 40.
- The number of marks for each question or part question is shown in brackets [ ].

For Examiner's Use	
1	
2	
3	
4	
Total	

This document has **16** pages. Any blank pages are indicated.

© UCLES 2025

[Turn over

www.dynamicpapers.com

1 In this experiment, you will measure the efficiency of a small electric heater constructed from a coil of wire.

You are provided with a circuit consisting of:

- a power supply
- a coil of wire in a beaker (the coil of wire is the heater)
- an ammeter
- a voltmeter
- a switch in the open position
- connecting wires.

(a) In the answer space, draw a circuit diagram of the circuit that has been set up for you.

[2]

You are also provided with:

- a thermometer
- a stirrer
- a supply of water at room temperature
- a measuring cylinder
- a stopwatch.

(b) Use the measuring cylinder to measure 50 cm^3 of water.

Pour the water into the beaker containing the heater.

Make sure that the water covers the heater.

Measure and record the initial temperature θ_0 of the water in the beaker.

θ_0 = ... °C [1]

DO NOT WRITE IN THIS MARGIN
DO NOT WRITE IN THIS MARGIN
DO NOT WRITE IN THIS MARGIN
DO NOT WRITE IN THIS MARGIN
DO NOT WRITE IN THIS MARGIN

www.dynamicpapers.com

DO NOT WRITE IN THIS MARGIN
DO NOT WRITE IN THIS MARGIN
DO NOT WRITE IN THIS MARGIN
DO NOT WRITE IN THIS MARGIN
DO NOT WRITE IN THIS MARGIN

(c) (i) Close the switch, and start the stopwatch immediately.

Record the current I in the circuit and the potential difference V across the heater.

I = ... A

V = ... V
[1]

(ii) Leave the circuit switched on for 5 minutes.

During this time, gently stir the water using the stirrer.

After 5 minutes, open the switch.

Continue to stir the water for a further minute before recording the temperature again. This is the final temperature θ_F.

Record θ_F and calculate the temperature change $\Delta\theta$.

Use the equation shown.

$$\Delta\theta = \theta_F - \theta_0$$

θ_F = ... °C

$\Delta\theta$ = ... °C
[1]

(iii) Explain why the water is stirred for a further minute after the circuit is switched off.

.....

..... [1]

(d) (i) The energy Q_H supplied by the heater is given by

$$Q_H = I \times V \times t$$

where t = 300 s.

Calculate Q_H. Show your working.

Q_H = ... J [1]

© UCLES 2025

www.dynamicpapers.com

(ii) The energy Q_W gained by the water is given by the equation shown.

$$Q_W = 50 \times 4.2 \times \Delta\theta$$

Calculate Q_W. Show your working.

Q_W = ... J [1]

(iii) The efficiency of the heater is given by the equation shown.

$$\text{efficiency} = \frac{Q_W}{Q_H}$$

Calculate the efficiency of the heater. Show your working.

efficiency = ... [1]

(e) Suggest one change that can be made to the apparatus you have used in this investigation that will increase the efficiency of the heater.

.....

..... [1]

[Total: 10]

DO NOT WRITE IN THIS MARGIN
DO NOT WRITE IN THIS MARGIN
DO NOT WRITE IN THIS MARGIN
DO NOT WRITE IN THIS MARGIN
DO NOT WRITE IN THIS MARGIN

© UCLES 2025

www.dynamicpapers.com

BLANK PAGE

DO NOT WRITE IN THIS MARGIN
DO NOT WRITE IN THIS MARGIN
DO NOT WRITE IN THIS MARGIN
DO NOT WRITE IN THIS MARGIN
DO NOT WRITE IN THIS MARGIN

www.dynamicpapers.com

2 You will investigate the refraction of light through a transparent block.

You are provided with:

- a rectangular transparent block
- an illuminated slit
- a protractor
- a 30 cm ruler.

(a) Fig. 2.1 is on page 7.

(i) On Fig. 2.1, draw a normal to the line **XY** at point **M**. Extend the normal 8 cm above and 8 cm below the line **XY**. [1]

(ii) On Fig. 2.1, draw a line from point **M** to the left of the normal above line **XY** so that the angle between the drawn line and the normal is 40°.

Label the top left-hand end of the line as point **L**. [1]

(b) (i) Place the block with one of its long sides on the line **XY**.

The top left-hand side of the block should be at point **X**.

Draw the outline of the block on Fig. 2.1.

Do **not** remove the transparent block. [1]

(ii) Using the illuminated slit, shine a narrow ray of light along the line **LM**.

Mark with small crosses (x) **two** points on the ray that emerges from the block.

Choose the position of the points so that the ray leaving the block can be drawn accurately. [1]

(iii) Remove the glass block.

Join the marked crosses and extend the line to meet the lower end of the outline of the block.

Label the point where the line meets the block outline as point **P**. [1]

(iv) Draw a straight line to join the points **M** and **P**. [1]

(v) The angle of refraction *r* is the angle between the line **MP** and the normal drawn in **(a)(i)**.

Measure and record angle *r*.

r = ... ° [1]

DO NOT WRITE IN THIS MARGIN
DO NOT WRITE IN THIS MARGIN
DO NOT WRITE IN THIS MARGIN
DO NOT WRITE IN THIS MARGIN
DO NOT WRITE IN THIS MARGIN

© UCLES 2025

www.dynamicpapers.com

DO NOT WRITE IN THIS MARGIN
DO NOT WRITE IN THIS MARGIN
DO NOT WRITE IN THIS MARGIN
DO NOT WRITE IN THIS MARGIN
DO NOT WRITE IN THIS MARGIN

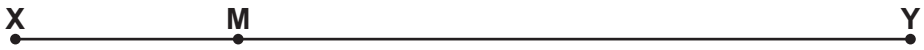

Fig. 2.1

www.dynamicpapers.com

(c) The refractive index n of the transparent block is given by the equation shown.

$$n = \frac{\sin 40°}{\sin r}$$

Calculate n and give your answer to 2 significant figures.

n = ... [2]

(d) Suggest how you could change the experiment to make sure that your value of n is accurate.

.....

.....

..... [1]

[Total: 10]

DO NOT WRITE IN THIS MARGIN
DO NOT WRITE IN THIS MARGIN
DO NOT WRITE IN THIS MARGIN
DO NOT WRITE IN THIS MARGIN
DO NOT WRITE IN THIS MARGIN

www.dynamicpapers.com

BLANK PAGE

DO NOT WRITE IN THIS MARGIN
DO NOT WRITE IN THIS MARGIN
DO NOT WRITE IN THIS MARGIN
DO NOT WRITE IN THIS MARGIN
DO NOT WRITE IN THIS MARGIN

www.dynamicpapers.com

3 You will measure the average mass of a marble (glass ball) and investigate the speed of a marble rolling down a slope.

You are provided with:

- a small dish
- 5 identical marbles (glass balls)
- access to a top pan balance.

(a) (i) Empty the dish and place it on the top pan balance.

Press the zero (tare) button.

Add the 5 marbles back to the dish.

Write down the mass of the 5 marbles.

mass of 5 marbles = ... g [1]

(ii) Calculate the average mass of 1 marble.

average mass of 1 marble = ... g [1]

DO NOT WRITE IN THIS MARGIN
DO NOT WRITE IN THIS MARGIN
DO NOT WRITE IN THIS MARGIN
DO NOT WRITE IN THIS MARGIN
DO NOT WRITE IN THIS MARGIN

© UCLES 2025

DO NOT WRITE IN THIS MARGIN
DO NOT WRITE IN THIS MARGIN
DO NOT WRITE IN THIS MARGIN
DO NOT WRITE IN THIS MARGIN
DO NOT WRITE IN THIS MARGIN

(b) (i) You are also provided with:

- a clamp, stand and boss
- 2 metre rules or wooden strips, arranged as shown in the diagram with a small gap between them to act as a track (ramp) for a marble
- a small block of wood to act as a stopper at the end of the track
- a stopwatch
- an additional metre or half-metre rule, or a 30 cm ruler.

The apparatus has been set up for you as shown in Fig. 3.1.

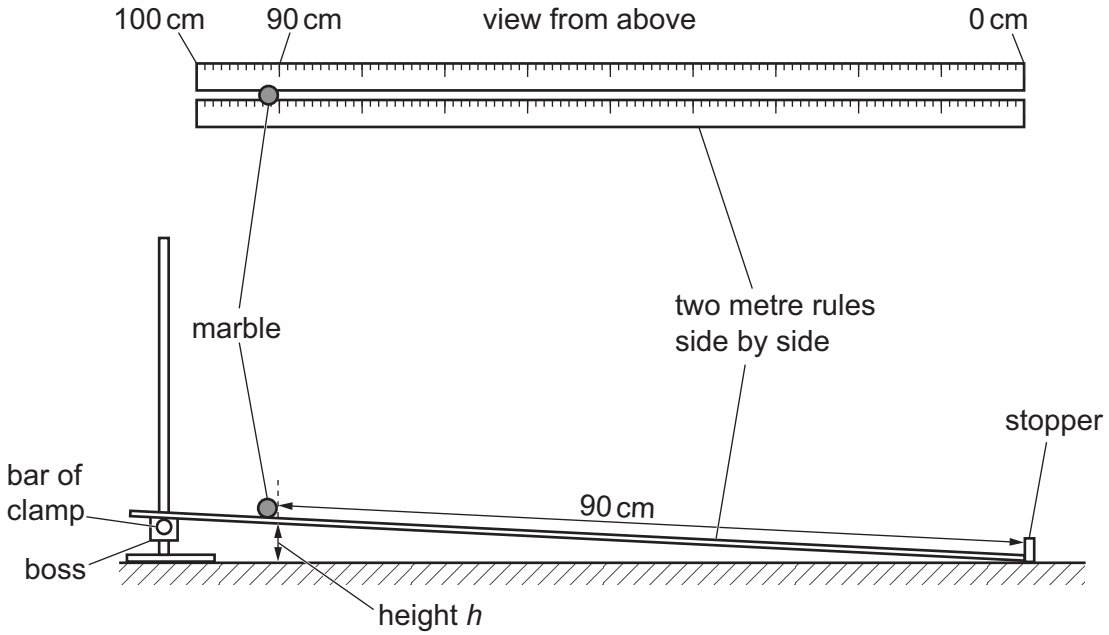

Fig. 3.1

The distance between the bench and the bottom side of the rule at the 90 cm mark is h.

The ramp is initially arranged with height h = 4.0 cm above the bench.

Place one marble on the gap between the rules so that its right-hand edge is on the 90.0 cm mark as shown.

Release the marble, and record the time t_1 for it to roll down the ramp until it hits the stopper.

Repeat the experiment two more times, recording the results as times t_2 and t_3.

Calculate the average time t_{av} for the marble to travel 90.0 cm down the ramp.

t_1 = ... s

t_2 = ... s

t_3 = ... s

t_{av} = ... s
[1]

(ii) Repeat the experiment in **(b)(i)** for heights h = 6.0 cm, 8.0 cm, 10.0 cm and 12.0 cm.

The ramp height is adjusted using the clamp, boss and stand.

Record **all** your results in Table 3.1, including your results from **(b)(i)**.

Table 3.1

h / cm	t_1 / s	t_2 / s	t_3 / s	t_{av} / s
4.0				
6.0				
8.0				
10.0				
12.0				

[2]

(iii) On the grid provided in Fig. 3.2 on page 13, plot a graph of t_{av} / s on the y-axis against h / cm on the x-axis.

Draw a line of best fit through your points. You do not need to start your axes at (0, 0). [4]

(iv) Describe the relationship between h and t_{av}.

.....

..... [1]

(c) (i) Use your graph to find t_{av} when h = 7.0 cm.

Show on the graph how you find t_{av} for h = 7.0 cm.

t_{av} = ... s [2]

(ii) The average speed v of the marble is given by

$$v = \frac{d}{t_{av}}$$

where d is the distance the ball travels along the track.

Find the average speed of the marble when h = 7.0 cm. Give the unit of your answer.

average speed = ... unit ..... [2]

[Total: 14]

DO NOT WRITE IN THIS MARGIN
DO NOT WRITE IN THIS MARGIN
DO NOT WRITE IN THIS MARGIN
DO NOT WRITE IN THIS MARGIN
DO NOT WRITE IN THIS MARGIN

DO NOT WRITE IN THIS MARGIN
DO NOT WRITE IN THIS MARGIN
DO NOT WRITE IN THIS MARGIN
DO NOT WRITE IN THIS MARGIN
DO NOT WRITE IN THIS MARGIN

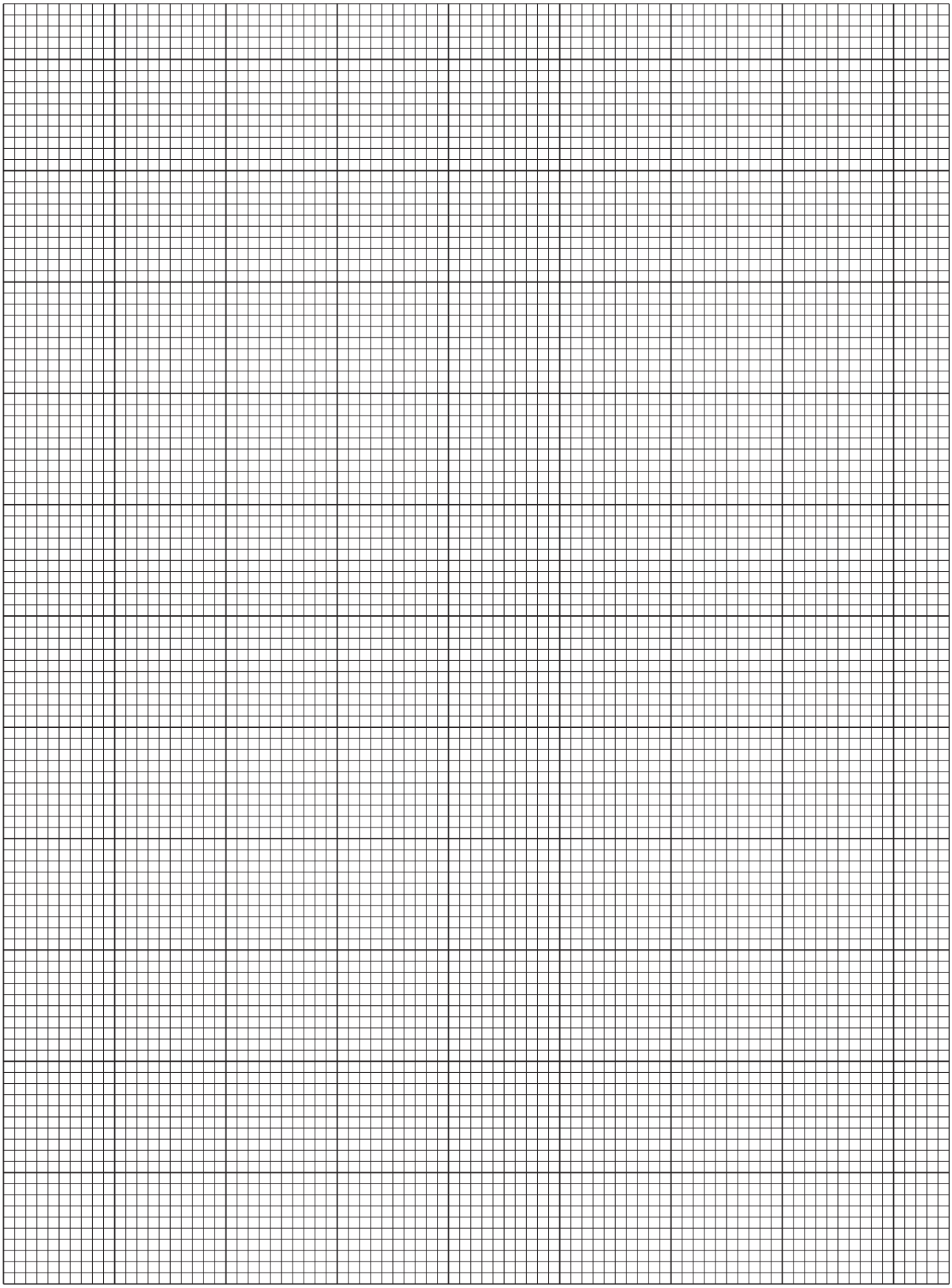

Fig. 3.2

4 A solar cell is a device that can generate electrical power when light falls on it.

You are given a solar cell connected to a fixed resistor as in the incomplete circuit shown in Fig. 4.1.

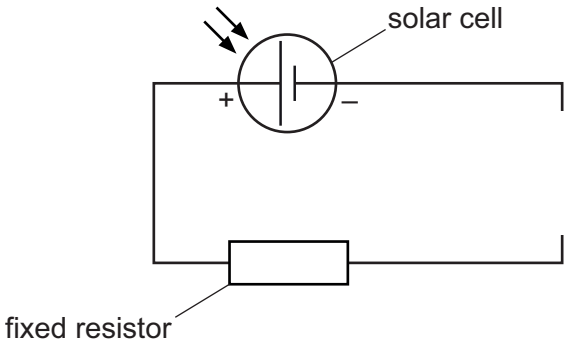

Fig. 4.1

Plan an experiment to investigate how the brightness of the light falling on the solar cell affects the electrical power output of the solar cell.

The power of the cell can be found using the equation shown.

power = current × voltage

The following apparatus is available in addition to the apparatus shown in the circuit diagram:

- a lamp connected to a power supply
- a metre rule
- a voltmeter
- an ammeter
- connecting leads.

Other apparatus normally available in a school laboratory can also be used.

You are not required to do this experiment.

In your plan, you should:

- explain how you will vary the brightness of the light falling on the solar cell
- show how the voltmeter and ammeter are used. You may draw on Fig. 4.1 to help your explanation
- state any variable(s) that you will control
- draw a table with column headings to show how to display recorded measurements (you are not required to enter any readings in the table)
- explain how to use your measurements to reach a conclusion.

DO NOT WRITE IN THIS MARGIN
DO NOT WRITE IN THIS MARGIN
DO NOT WRITE IN THIS MARGIN
DO NOT WRITE IN THIS MARGIN
DO NOT WRITE IN THIS MARGIN

www.dynamicpapers.com

DO NOT WRITE IN THIS MARGIN
DO NOT WRITE IN THIS MARGIN
DO NOT WRITE IN THIS MARGIN
DO NOT WRITE IN THIS MARGIN
DO NOT WRITE IN THIS MARGIN

.....

.....

.....

.....

.....

.....

.....

.....

.....

.....

.....

.....

.....

.....

.....

.....

.....

..... [6]

www.dynamicpapers.com

BLANK PAGE

DO NOT WRITE IN THIS MARGIN
DO NOT WRITE IN THIS MARGIN
DO NOT WRITE IN THIS MARGIN
DO NOT WRITE IN THIS MARGIN
DO NOT WRITE IN THIS MARGIN

Permission to reproduce items where third-party owned material protected by copyright is included has been sought and cleared where possible. Every reasonable effort has been made by the publisher (UCLES) to trace copyright holders, but if any items requiring clearance have unwittingly been included, the publisher will be pleased to make amends at the earliest possible opportunity.

To avoid the issue of disclosure of answer-related information to candidates, all copyright acknowledgements are reproduced online in the Cambridge Assessment International Education Copyright Acknowledgements Booklet. This is produced for each series of examinations and is freely available to download at www.cambridgeinternational.org after the live examination series.

Cambridge Assessment International Education is part of Cambridge Assessment. Cambridge Assessment is the brand name of the University of Cambridge Local Examinations Syndicate (UCLES), which is a department of the University of Cambridge.

© UCLES 2025