* 0000800000001 *

www.dynamicpapers.com

Cambridge Assessment International Education

Cambridge O Level

CANDIDATE NAME

CENTRE NUMBER

CANDIDATE NUMBER

8491060808

PHYSICS **5054/41**

Paper 4 Alternative to Practical **October/November 2024**

1 hour

You must answer on the question paper.

No additional materials are needed.

INSTRUCTIONS

- Answer **all** questions.
- Use a black or dark blue pen. You may use an HB pencil for any diagrams or graphs.
- Write your name, centre number and candidate number in the boxes at the top of the page.
- Write your answer to each question in the space provided.
- Do **not** use an erasable pen or correction fluid.
- Do **not** write on any bar codes.
- You may use a calculator.
- You should show all your working and use appropriate units.

INFORMATION

- The total mark for this paper is 40.
- The number of marks for each question or part question is shown in brackets [ ].

This document has **20** pages. Any blank pages are indicated.

© UCLES 2024

[Turn over

www.dynamicpapers.com

1 A student measures the volume of two identical straws by different methods.

(a) method 1

(i) The student takes one straw and:

- cuts it into 5 pieces that are equal in length
- lines up the pieces of straw as shown in Fig. 1.1
- ensures the pieces of straw are touching.

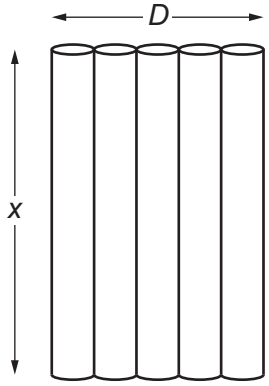

Fig. 1.1

Fig. 1.1 is drawn actual size.

Measure and record lengths x and D to the nearest 0.1 cm.

x = ... cm

D = ... cm
[1]

(ii) Use your value of x in **(a)(i)** to calculate the length l of the straw before it was cut into pieces.

l = ... cm [1]

(iii) Use your value for D in **(a)(i)** to calculate the diameter d of **one** straw. Give your answer to the nearest 0.01 cm.

d = ... cm [1]

DO NOT WRITE IN THIS MARGIN
DO NOT WRITE IN THIS MARGIN
DO NOT WRITE IN THIS MARGIN
DO NOT WRITE IN THIS MARGIN
DO NOT WRITE IN THIS MARGIN

© UCLES 2024

www.dynamicpapers.com

(iv) Explain how the student uses a ruler and two set squares to make sure that the measurement of D is as accurate as possible.

You may draw a diagram to help your explanation.

.....

.....

.....

..... [1]

(v) The volume V_1 of the straw is given by the equation:

$$V_1 = \frac{3.14\, d^2 l}{4}$$

Use your answers from **(a)(ii)** and **(a)(iii)** to calculate V_1. Give your answer to two significant figures.

V_1 = ... cm^3 [2]

DO NOT WRITE IN THIS MARGIN

DO NOT WRITE IN THIS MARGIN

DO NOT WRITE IN THIS MARGIN

DO NOT WRITE IN THIS MARGIN

DO NOT WRITE IN THIS MARGIN

(b) method 2

The student:

- takes the second straw
- immerses the straw fully in a container of water as shown in Fig. 1.2

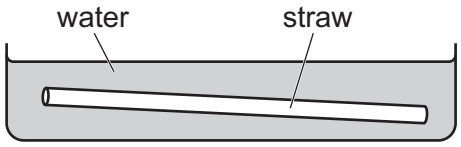

Fig. 1.2

- moves the straw backwards and forwards in the water several times so that the water enters the straw
- puts a finger firmly over one end of the straw, and removes the straw from the water
- puts the straw above the open end of a 50 cm^3 measuring cylinder, and then removes the finger so that the water is transferred into the measuring cylinder.

The student repeats the process 4 more times for a total of 5 transfers.

(i) Fig. 1.3 shows the total volume of water V_T in the measuring cylinder.

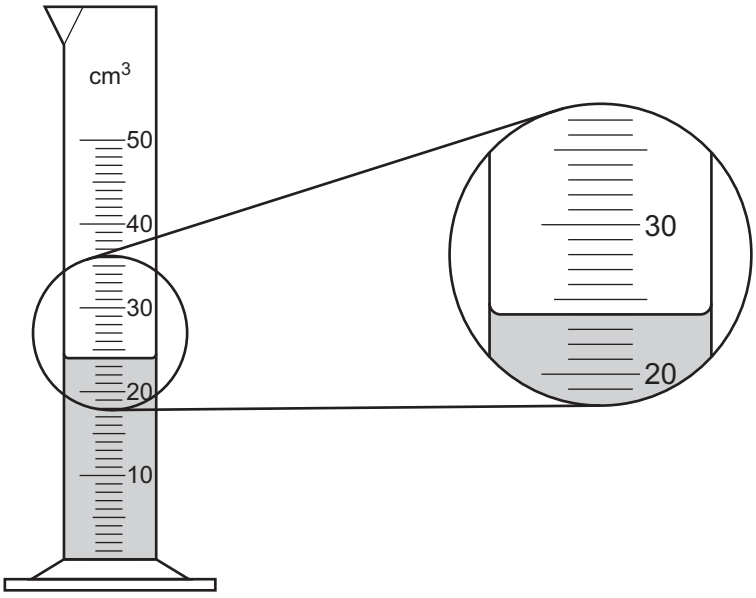

Fig. 1.3

Write down the reading V_T.

V_T = ... cm^3 [1]

(ii) Calculate the average volume of water V_2 in **one** straw.

V_2 = ... cm^3 [1]

DO NOT WRITE IN THIS MARGIN
DO NOT WRITE IN THIS MARGIN
DO NOT WRITE IN THIS MARGIN
DO NOT WRITE IN THIS MARGIN
DO NOT WRITE IN THIS MARGIN

www.dynamicpapers.com

(c) Suggest **two** reasons why V_1 and V_2 are different.

1 .....

.....

2 .....

.....

[2]

[Total: 10]

DO NOT WRITE IN THIS MARGIN
DO NOT WRITE IN THIS MARGIN
DO NOT WRITE IN THIS MARGIN
DO NOT WRITE IN THIS MARGIN
DO NOT WRITE IN THIS MARGIN

2 A student investigates series and parallel combinations of resistors.

The student is provided with two resistors, X and Y, connected in the circuit shown in Fig. 2.1. The resistors are not identical.

The electromotive force (e.m.f.) of the power supply is 3.0 V.

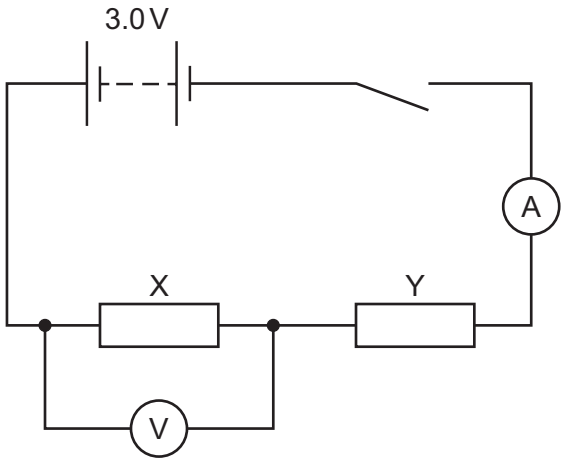

Fig. 2.1

(a) (i) • The student closes the switch.

Fig. 2.2 shows the readings V_X on the voltmeter and I_S on the ammeter.

Record the readings of V_X and I_S.

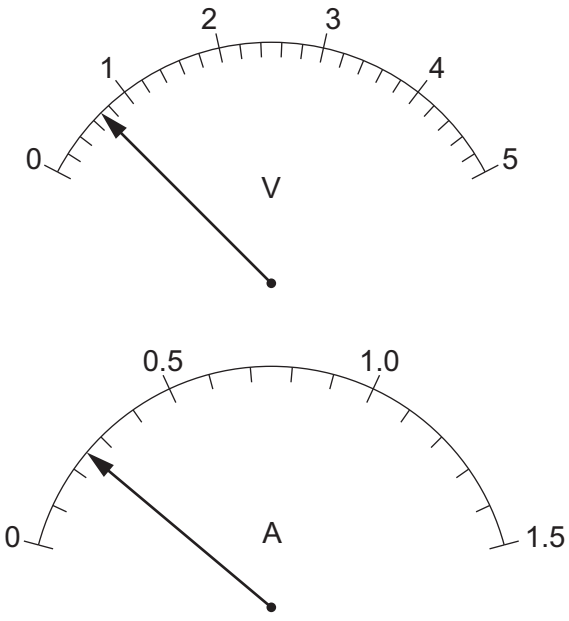

Fig. 2.2

V_X = ... V

I_S = ...A

[2]

• The student opens the switch.

DO NOT WRITE IN THIS MARGIN
DO NOT WRITE IN THIS MARGIN
DO NOT WRITE IN THIS MARGIN
DO NOT WRITE IN THIS MARGIN
DO NOT WRITE IN THIS MARGIN

(ii) The resistance of a resistor can be found using the equation:

$$\text{resistance} = \frac{\text{voltage across the resistor}}{\text{current in the resistor}}$$

Calculate R_X, the resistance of resistor X.

R_X = ... Ω [1]

(iii) Suggest why the switch is opened after the readings of potential difference and current are recorded.

.....

..... [1]

(iv) • The student disconnects the voltmeter and reconnects it across resistor Y.

The potential difference V_Y across Y is given by the equation:

$$V_Y = 3.0 - V_X$$

Using this equation and your value of V_X from **(a)(i)**, calculate V_Y.

Calculate the resistance R_Y of Y.

V_Y = ... V

R_Y = ... Ω
[1]

DO NOT WRITE IN THIS MARGIN
DO NOT WRITE IN THIS MARGIN
DO NOT WRITE IN THIS MARGIN
DO NOT WRITE IN THIS MARGIN
DO NOT WRITE IN THIS MARGIN

(b) (i) • The student now connects X and Y in parallel.

Complete the circuit diagram in Fig. 2.3 to show the two resistors connected in **parallel** between points W and Z.

Draw the voltmeter connected to measure the potential difference V_P across **both** resistors.

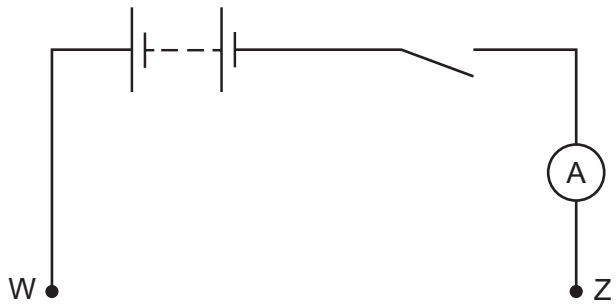

Fig. 2.3

[2]

(ii) Theory suggests that, if the two resistors are arranged in parallel, the combined resistance R_T is given by:

$$R_T = \frac{R_X R_Y}{R_X + R_Y}$$

Use the equation and your values of R_X and R_Y from **(a)(ii)** and **(a)(iv)** to calculate R_T.

R_T = ... Ω [1]

DO NOT WRITE IN THIS MARGIN
DO NOT WRITE IN THIS MARGIN
DO NOT WRITE IN THIS MARGIN
DO NOT WRITE IN THIS MARGIN
DO NOT WRITE IN THIS MARGIN

www.dynamicpapers.com

(iii) The manufacturer suggests that the combined resistance of resistors X and Y when placed in parallel is 2.5 Ω.

Two quantities can be considered to be equal within the limits of experimental accuracy if their values are within 10% of each other.

State whether your value of R_T calculated in **(b)(ii)** has the same value as that suggested by the manufacturer. Support your statement with a calculation.

calculation

statement .....

.....

..... [2]

[Total: 10]

DO NOT WRITE IN THIS MARGIN
DO NOT WRITE IN THIS MARGIN
DO NOT WRITE IN THIS MARGIN
DO NOT WRITE IN THIS MARGIN
DO NOT WRITE IN THIS MARGIN

www.dynamicpapers.com

BLANK PAGE

DO NOT WRITE IN THIS MARGIN
DO NOT WRITE IN THIS MARGIN
DO NOT WRITE IN THIS MARGIN
DO NOT WRITE IN THIS MARGIN
DO NOT WRITE IN THIS MARGIN

DO NOT WRITE IN THIS MARGIN
DO NOT WRITE IN THIS MARGIN
DO NOT WRITE IN THIS MARGIN
DO NOT WRITE IN THIS MARGIN
DO NOT WRITE IN THIS MARGIN

3 A student does an experiment to find the mass of a metre rule.

(a) A fixed mass is placed on the metre rule at the 5.0 cm mark as shown in Fig. 3.1.

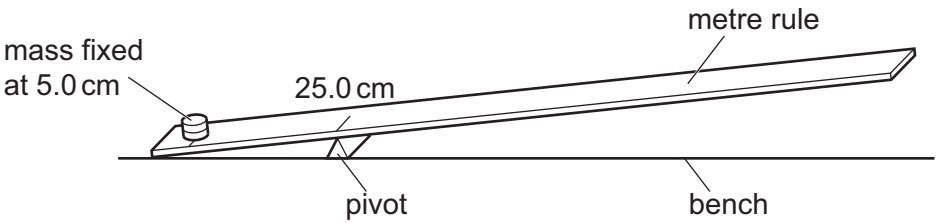

Fig. 3.1

The student:

- places the pivot below the 25.0 cm mark on the metre rule
- places a mass of mass m = 20 g on the metre rule
- adjusts the position of the 20 g mass until the rule is as close to balance as possible.

(i) The position of the 20 g mass when the rule is as close to balance as possible is shown in Fig. 3.2.

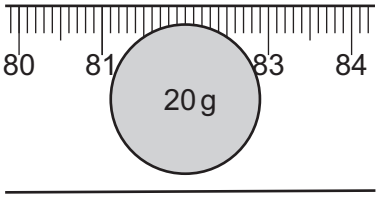

Fig. 3.2

Using Fig. 3.2, determine the distance d of the centre of the 20 g mass **from the pivot** when the metre rule is as close to balance as possible.

d = ... cm [1]

(ii) Describe the technique the student uses to balance the metre rule with the 20 g mass.

.....

.....

..... [1]

(iii) • The student repeats the procedure for values of mass m = 30 g, 40 g, 50 g and 60 g.

Table 3.1 shows the results.

Add your value of d for mass m = 20 g in **(a)(i)** to Table 3.1.

Calculate $1/d$ for each mass m, and record all values in Table 3.1.

Give your answers to an appropriate number of significant figures.

Table 3.1

m / g	d / cm	$\frac{1}{d} \Big/ \frac{1}{\text{cm}}$
20	.....	.....
30	37	.....
40	28	.....
50	22	.....
60	18	.....

[2]

(iv) Suggest why a value of d cannot be found for mass m = 10 g.

.....

..... [1]

(b) (i) Using the grid provided in Fig. 3.3 on page 13, plot a graph of $1/d$ on the y-axis against m on the x-axis.

Start your axes from the origin (0, 0).

Draw the straight line of best fit. [4]

(ii) Calculate the gradient G of your line.

Show all your working, and indicate on the graph the values you use.

G = ... [2]

© UCLES 2024

DO NOT WRITE IN THIS MARGIN
DO NOT WRITE IN THIS MARGIN
DO NOT WRITE IN THIS MARGIN
DO NOT WRITE IN THIS MARGIN
DO NOT WRITE IN THIS MARGIN

DO NOT WRITE IN THIS MARGIN
DO NOT WRITE IN THIS MARGIN
DO NOT WRITE IN THIS MARGIN
DO NOT WRITE IN THIS MARGIN
DO NOT WRITE IN THIS MARGIN

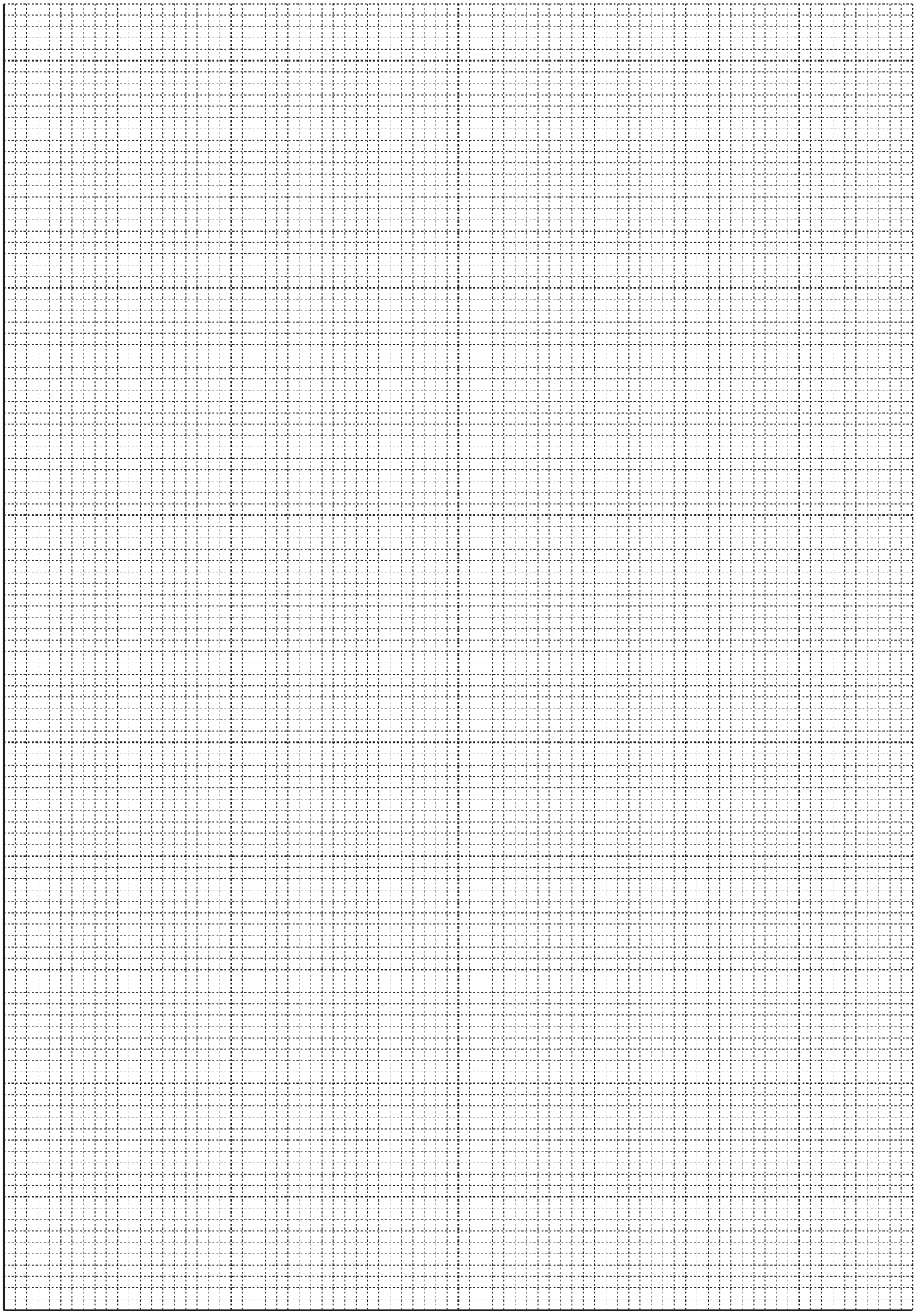

Fig. 3.3

(c) The mass M of the metre rule can be calculated using the equation:

$$M = 160 - \frac{0.040}{G}$$

Use your value of G in **(b)(ii)** to calculate M.

M = ... g [1]

(d)

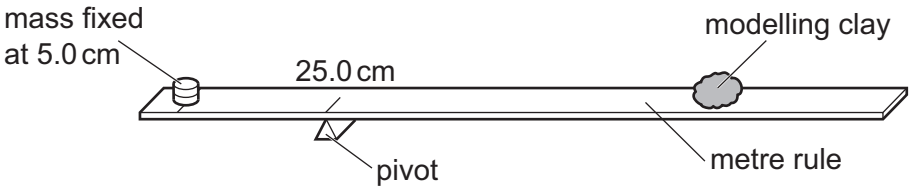

Fig. 3.4

The student is given a piece of modelling clay. He places it on the metre rule as shown in Fig. 3.4. He finds that the metre rule is balanced when the modelling clay is a distance of 40.0 cm from the pivot.

Using your graph in Fig. 3.3 on page 13, find the mass of the piece of modelling clay. Show your working.

mass of piece of modelling clay = ... g [2]

[Total: 14]

DO NOT WRITE IN THIS MARGIN
DO NOT WRITE IN THIS MARGIN
DO NOT WRITE IN THIS MARGIN
DO NOT WRITE IN THIS MARGIN
DO NOT WRITE IN THIS MARGIN

DO NOT WRITE IN THIS MARGIN
DO NOT WRITE IN THIS MARGIN
DO NOT WRITE IN THIS MARGIN
DO NOT WRITE IN THIS MARGIN
DO NOT WRITE IN THIS MARGIN

BLANK PAGE

4 A student uses ice cubes to investigate the time taken for different masses of ice to melt when the ice cubes are placed in water.

Plan an experiment using ice cubes to investigate how the mass of ice affects the time taken for the ice to melt.

The following apparatus is available:

top pan balance
supply of ice cubes
250 cm^3 beaker
supply of cold water
stopwatch

You may also use other apparatus and materials that are usually available in a school laboratory.

In your plan, you should:

- explain briefly how to do the investigation
- state the key variables to keep constant
- draw a table, with column headings, to show how to display readings (you are not required to enter any readings in the table)
- explain how to use these readings to reach a conclusion.

You do **not** have to include a diagram of the apparatus you use but you may do so if it helps your plan.

.....

.....

.....

.....

.....

DO NOT WRITE IN THIS MARGIN
DO NOT WRITE IN THIS MARGIN
DO NOT WRITE IN THIS MARGIN
DO NOT WRITE IN THIS MARGIN
DO NOT WRITE IN THIS MARGIN

DO NOT WRITE IN THIS MARGIN
DO NOT WRITE IN THIS MARGIN
DO NOT WRITE IN THIS MARGIN
DO NOT WRITE IN THIS MARGIN
DO NOT WRITE IN THIS MARGIN

.....

.....

.....

www.dynamicpapers.com

BLANK PAGE

DO NOT WRITE IN THIS MARGIN
DO NOT WRITE IN THIS MARGIN
DO NOT WRITE IN THIS MARGIN
DO NOT WRITE IN THIS MARGIN
DO NOT WRITE IN THIS MARGIN

* 0000800000019 *

www.dynamicpapers.com

BLANK PAGE

DO NOT WRITE IN THIS MARGIN
DO NOT WRITE IN THIS MARGIN
DO NOT WRITE IN THIS MARGIN
DO NOT WRITE IN THIS MARGIN
DO NOT WRITE IN THIS MARGIN

© UCLES 2024

www.dynamicpapers.com

BLANK PAGE

DO NOT WRITE IN THIS MARGIN
DO NOT WRITE IN THIS MARGIN
DO NOT WRITE IN THIS MARGIN
DO NOT WRITE IN THIS MARGIN
DO NOT WRITE IN THIS MARGIN

Permission to reproduce items where third-party owned material protected by copyright is included has been sought and cleared where possible. Every reasonable effort has been made by the publisher (UCLES) to trace copyright holders, but if any items requiring clearance have unwittingly been included, the publisher will be pleased to make amends at the earliest possible opportunity.

To avoid the issue of disclosure of answer-related information to candidates, all copyright acknowledgements are reproduced online in the Cambridge Assessment International Education Copyright Acknowledgements Booklet. This is produced for each series of examinations and is freely available to download at www.cambridgeinternational.org after the live examination series.

Cambridge Assessment International Education is part of Cambridge Assessment. Cambridge Assessment is the brand name of the University of Cambridge Local Examinations Syndicate (UCLES), which is a department of the University of Cambridge.

© UCLES 2024