* 0000800000001 *

www.dynamicpapers.com

Cambridge Assessment International Education

Cambridge O Level

CANDIDATE NAME

CENTRE NUMBER

CANDIDATE NUMBER

6808819631

PHYSICS **5054/32**

Paper 3 Practical Test **October/November 2024**

1 hour 30 minutes

You must answer on the question paper.

You will need: The materials and apparatus listed in the confidential instructions

INSTRUCTIONS

- Answer **all** questions.
- Use a black or dark blue pen. You may use an HB pencil for any diagrams or graphs.
- Write your name, centre number and candidate number in the boxes at the top of the page.
- Write your answer to each question in the space provided.
- Do **not** use an erasable pen or correction fluid.
- Do **not** write on any bar codes.
- You may use a calculator.
- You should show all your working and use appropriate units.

INFORMATION

- The total mark for this paper is 40.
- The number of marks for each question or part question is shown in brackets [ ].

For Examiner's Use	
1	
2	
3	
4	
Total	

This document has **16** pages. Any blank pages are indicated.

© UCLES 2024

[Turn over

1 In this experiment you will determine an approximate value for the density of the glass from which a test-tube is made.

You are provided with:

- a test-tube
- a 250 cm^3 glass beaker containing water
- a 30 cm ruler
- a 100 cm^3 measuring cylinder
- 2 rectangular blocks of wood
- access to a balance.

The height *h* and the external diameter *d* of the test-tube are shown in Fig. 1.1.

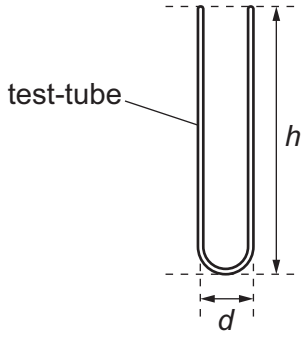

Fig. 1.1 (not to scale)

(a) (i) Use the balance to measure the mass *m* of the test-tube. Record your answer to the nearest **gram**.

m = ... g [1]

(ii) Measure the height *h* of the test-tube. Record your answer to the nearest 0.1 cm.

h = ... cm [1]

(iii) Measure and record the external diameter *d* of the test-tube.

Use the two wooden blocks to help you.

d = ... cm [1]

(iv) Draw a diagram to show how you use the wooden blocks to help you obtain your measurement of *d* in **(iii)**.

[1]

DO NOT WRITE IN THIS MARGIN
DO NOT WRITE IN THIS MARGIN
DO NOT WRITE IN THIS MARGIN
DO NOT WRITE IN THIS MARGIN
DO NOT WRITE IN THIS MARGIN

DO NOT WRITE IN THIS MARGIN
DO NOT WRITE IN THIS MARGIN
DO NOT WRITE IN THIS MARGIN
DO NOT WRITE IN THIS MARGIN
DO NOT WRITE IN THIS MARGIN

(b) The shape of the test-tube is approximately a cylinder.

Calculate the external volume V_E of the test-tube using the equation:

$$V_E = 0.79\, d^2\, h$$

V_E = ... cm^3 [1]

(c) Fill the test-tube to the top with water.

Pour the water carefully from the test-tube into the measuring cylinder.

Read and record the volume of water V_I in the measuring cylinder.

This is the internal volume of the test-tube.

V_I = ... cm^3 [1]

(d) Calculate the volume of the glass V_G in the test-tube using the equation:

$$V_G = V_E - V_I$$

V_G = ... cm^3 [1]

(e) Suggest **one** source of inaccuracy in measuring the internal volume of the test-tube V_I.

.....

..... [1]

(f) Use your results from **(a)(i)** and **(d)** to calculate the density ρ of the glass from which the test-tube is made. Use the equation:

$$\rho = \frac{m}{V_G}$$

Give the unit for your answer.

ρ = ... unit ..... [2]

[Total: 10]

2 In this experiment you will investigate how the resistance of a light-emitting diode (LED) changes with different currents.

You are provided with:

- a power source
- a switch
- a voltmeter with two leads that may be connected between different points in the circuit shown in Fig. 2.1
- a light-emitting diode (LED)
- a 270 Ω resistor, a 470 Ω resistor and a 560 Ω resistor
- sufficient connecting leads to make the circuit shown in Fig. 2.1.

The supervisor has set up the circuit shown in Fig. 2.1. The 270 Ω resistor is connected in the circuit and the 470 Ω resistor and the 560 Ω resistor are placed by the side of the circuit.

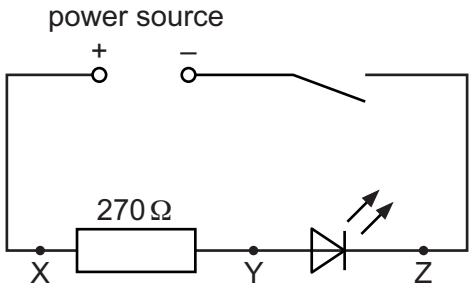

Fig. 2.1

(a) Connect the voltmeter across the 270 Ω resistor between points X and Y.

Ensure that the positive terminal of the voltmeter is connected to X.

Close the switch.

Record the voltmeter reading V_{XY} in the top row of Table 2.1.

Open the switch. [1]

Table 2.1

resistance between X and Y / Ω	V_{XY} / V	V_{YZ} / V	$(V_{XY} + V_{YZ})$ / V	I / A	R_{LED} / Ω
270					
470					
560					

DO NOT WRITE IN THIS MARGIN
DO NOT WRITE IN THIS MARGIN
DO NOT WRITE IN THIS MARGIN
DO NOT WRITE IN THIS MARGIN
DO NOT WRITE IN THIS MARGIN

DO NOT WRITE IN THIS MARGIN
DO NOT WRITE IN THIS MARGIN
DO NOT WRITE IN THIS MARGIN
DO NOT WRITE IN THIS MARGIN
DO NOT WRITE IN THIS MARGIN

(b) Disconnect the voltmeter from points X and Y.

Reconnect the voltmeter across the LED between points Y and Z.

Ensure that the positive terminal of the voltmeter is connected to Y.

Close the switch.

Record the voltmeter reading V_{YZ} in the correct row of Table 2.1.

Open the switch. [1]

(c) Remove the 270 Ω resistor from the circuit and replace it with the 470 Ω resistor.

Repeat the procedures in **(a)** and **(b)** for the 470 Ω resistor.

Remove the 470 Ω resistor from the circuit and replace it with the 560 Ω resistor.

Repeat the procedures in **(a)** and **(b)** for the 560 Ω resistor. [1]

(d) For each value of resistance between X and Y, calculate the value of $(V_{XY} + V_{YZ})$.

Record your answers in Table 2.1. [1]

(e) The current I in the circuit in part **(a)** can be calculated using the equation:

$$I = \frac{V_{XY}}{R}$$

where R is the resistance between X and Y.

Calculate I for R = 270 Ω, 470 Ω and 560 Ω.

Record your answers in Table 2.1.

[2]

(f) The resistance R_{LED} of the LED can be calculated using the equation:

$$R_{LED} = \frac{V_{YZ}}{I}$$

Calculate R_{LED} for each value of resistance between X and Y.

Record your answers in Table 2.1.

[1]

(g) As the resistance between terminals X and Y changes, the current in the circuit changes.

Examine your results in Table 2.1.

Describe how the change in current affects:

(i) (V_{XY} + V_{YZ})

.....

..... [1]

(ii) R_{LED}.

.....

..... [1]

(h) A student assembles a circuit using the circuit diagram shown in Fig. 2.1. The student finds that, when the switch is closed, the LED does not light up.

The student tests the components and finds that the power source is producing an e.m.f. and that none of the other components are broken.

Suggest the error the student has made while assembling the circuit.

.....

..... [1]

[Total: 10]

DO NOT WRITE IN THIS MARGIN
DO NOT WRITE IN THIS MARGIN
DO NOT WRITE IN THIS MARGIN
DO NOT WRITE IN THIS MARGIN
DO NOT WRITE IN THIS MARGIN

BLANK PAGE

DO NOT WRITE IN THIS MARGIN
DO NOT WRITE IN THIS MARGIN
DO NOT WRITE IN THIS MARGIN
DO NOT WRITE IN THIS MARGIN
DO NOT WRITE IN THIS MARGIN

3 In this experiment you will investigate the image formed by a converging lens.

You are provided with:

- a converging lens in a lens holder
- a metre rule
- a 30 cm ruler
- a white screen
- a triangular object in a piece of white card
- a lamp with a power supply, to illuminate the triangular object.

(a) Arrange the apparatus as shown in Fig. 3.1.

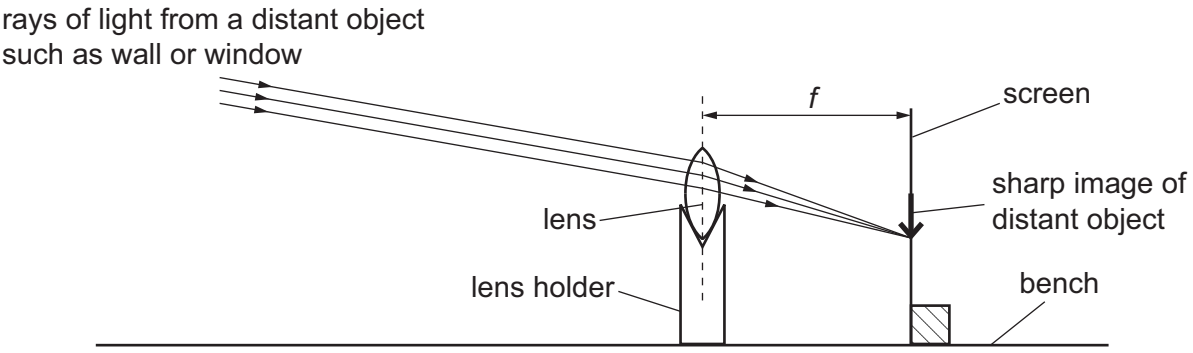

Fig. 3.1 (not to scale)

Place the white screen approximately 30 cm from the lens.

Adjust the position of the screen until a sharp image of the wall or the window of the laboratory, a few metres distant from the lens, is formed on the screen.

Measure and record, in centimetres to the nearest 0.1 cm, the distance from the lens to the screen.

This distance is the focal length *f* of the lens.

f = ... cm [1]

DO NOT WRITE IN THIS MARGIN
DO NOT WRITE IN THIS MARGIN
DO NOT WRITE IN THIS MARGIN
DO NOT WRITE IN THIS MARGIN
DO NOT WRITE IN THIS MARGIN

DO NOT WRITE IN THIS MARGIN
DO NOT WRITE IN THIS MARGIN
DO NOT WRITE IN THIS MARGIN
DO NOT WRITE IN THIS MARGIN
DO NOT WRITE IN THIS MARGIN

(b) Rearrange the apparatus as shown in Fig. 3.2.

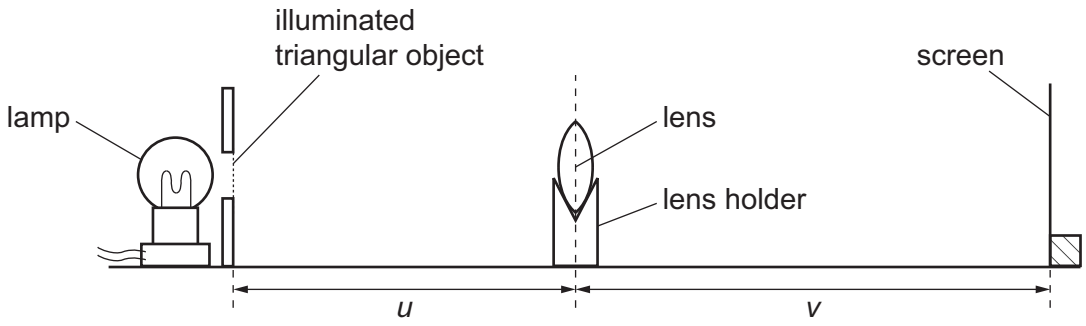

Fig. 3.2 (not to scale)

(i) Switch on the lamp.

Place the lens a distance u = 20.0 cm from the illuminated triangular object.

Adjust the position of the screen until a sharp image of the triangular object is formed on the screen.

Measure, to the nearest 0.1 cm, the image distance v from the lens to the screen.

v = ... cm [1]

(ii) Calculate the values of $(u + v)$ and uv.

$(u + v)$ = ...

uv = ...
[1]

(c) Repeat **(b)(i)** and **(b)(ii)** for values of u between $u = 25.0\,\text{cm}$ and $u = 60.0\,\text{cm}$.

Record all your values in Table 3.1. Include your readings from **(b)**.

Add appropriate units to the headers of the last two columns.

Table 3.1

u / cm	v / cm	$(u + v)$ /	uv / .....

[2]

(d) On the grid provided in Fig. 3.3 on page 11, plot a graph of uv on the y-axis against $(u + v)$ on the x-axis.

You do **not** need to start either axis from the origin (0, 0). Draw the straight line of best fit. [4]

(e) Calculate the gradient of the line.

Indicate on the graph the points you use.

Show all your working.

gradient = ... [2]

DO NOT WRITE IN THIS MARGIN
DO NOT WRITE IN THIS MARGIN
DO NOT WRITE IN THIS MARGIN
DO NOT WRITE IN THIS MARGIN
DO NOT WRITE IN THIS MARGIN

DO NOT WRITE IN THIS MARGIN
DO NOT WRITE IN THIS MARGIN
DO NOT WRITE IN THIS MARGIN
DO NOT WRITE IN THIS MARGIN
DO NOT WRITE IN THIS MARGIN

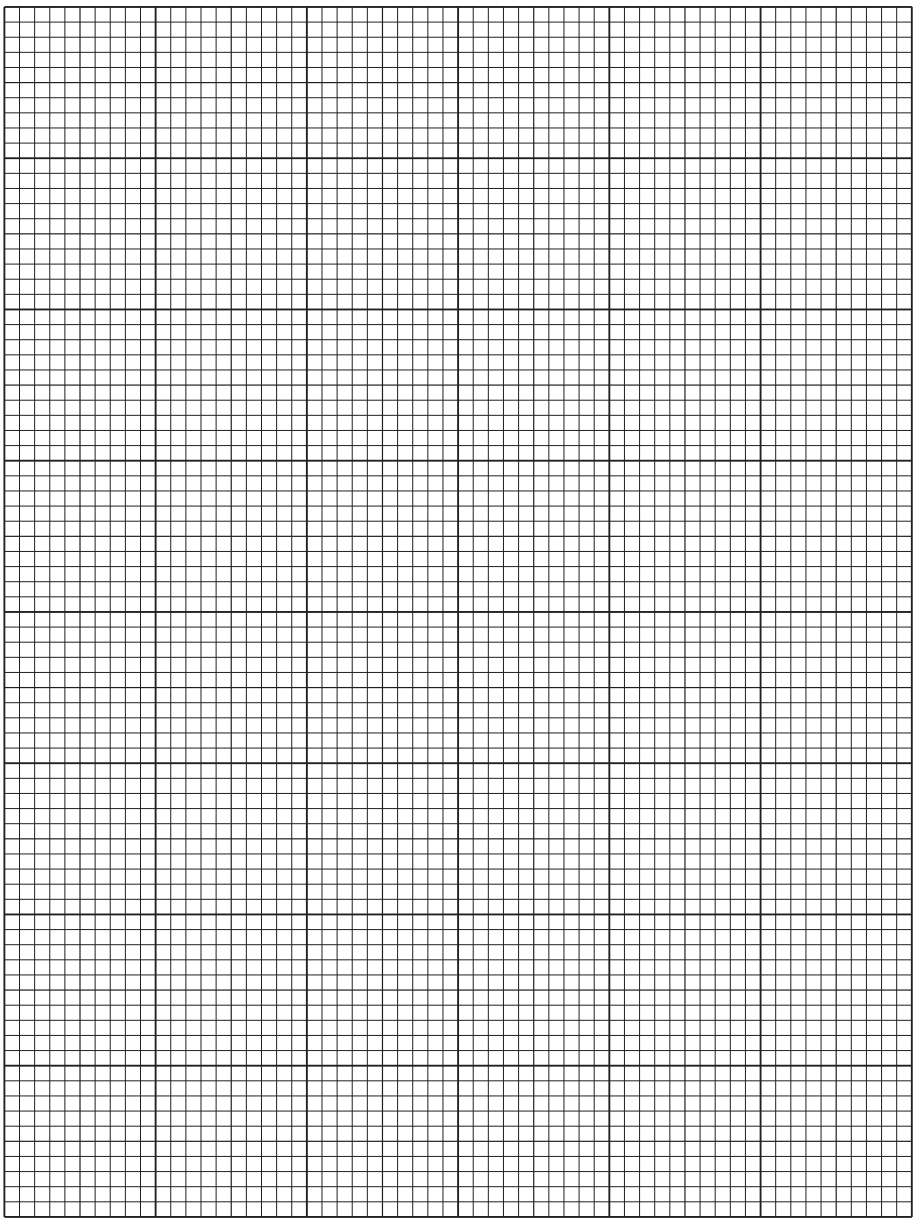

Fig. 3.3

(f) Two quantities can be considered to be the same within the limits of experimental accuracy if their values are within 10% of each other.

The gradient of your line calculated in **(e)** is numerically equal to the focal length *f* of the lens in cm.

Compare your value of *f* obtained in **(a)** with the value of the gradient obtained in **(e)**.

State if your two values can be considered to be the same.

Support your statement with a calculation.

calculation

statement .....

..... [2]

(g) When measuring the object and image distances with the metre rule, it is important to avoid line-of-sight (parallax) errors.

State how you avoid parallax errors when doing this experiment.

.....

..... [1]

[Total: 14]

DO NOT WRITE IN THIS MARGIN
DO NOT WRITE IN THIS MARGIN
DO NOT WRITE IN THIS MARGIN
DO NOT WRITE IN THIS MARGIN
DO NOT WRITE IN THIS MARGIN

BLANK PAGE

DO NOT WRITE IN THIS MARGIN
DO NOT WRITE IN THIS MARGIN
DO NOT WRITE IN THIS MARGIN
DO NOT WRITE IN THIS MARGIN
DO NOT WRITE IN THIS MARGIN

4 Water is heated from room temperature to its boiling temperature in a glass beaker.

Plan an experiment to investigate if the time taken for the water to reach its boiling temperature depends on the diameter of the water surface exposed to the air.

You are provided with:

- a supply of cold water
- a set of glass beakers of different sizes
- a Bunsen burner, tripod and gauze
- a measuring cylinder.

You may use any other common laboratory apparatus.

You are not required to do this investigation.

In your plan include:

- any other apparatus needed
- a brief description of the method, including what you will measure and how you will make sure your measurements are accurate
- the variables you will control
- a results table to record your measurements (you are not required to enter any readings in the table)
- how you will process your results to draw a conclusion.

You may include a labelled diagram if you wish.

DO NOT WRITE IN THIS MARGIN
DO NOT WRITE IN THIS MARGIN
DO NOT WRITE IN THIS MARGIN
DO NOT WRITE IN THIS MARGIN
DO NOT WRITE IN THIS MARGIN

DO NOT WRITE IN THIS MARGIN
DO NOT WRITE IN THIS MARGIN
DO NOT WRITE IN THIS MARGIN
DO NOT WRITE IN THIS MARGIN
DO NOT WRITE IN THIS MARGIN

[6]

BLANK PAGE

DO NOT WRITE IN THIS MARGIN

DO NOT WRITE IN THIS MARGIN

DO NOT WRITE IN THIS MARGIN

DO NOT WRITE IN THIS MARGIN

DO NOT WRITE IN THIS MARGIN

Permission to reproduce items where third-party owned material protected by copyright is included has been sought and cleared where possible. Every reasonable effort has been made by the publisher (UCLES) to trace copyright holders, but if any items requiring clearance have unwittingly been included, the publisher will be pleased to make amends at the earliest possible opportunity.

To avoid the issue of disclosure of answer-related information to candidates, all copyright acknowledgements are reproduced online in the Cambridge Assessment International Education Copyright Acknowledgements Booklet. This is produced for each series of examinations and is freely available to download at www.cambridgeinternational.org after the live examination series.

Cambridge Assessment International Education is part of Cambridge Assessment. Cambridge Assessment is the brand name of the University of Cambridge Local Examinations Syndicate (UCLES), which is a department of the University of Cambridge.

© UCLES 2024