* 0000800000001 *

www.dynamicpapers.com

Cambridge Assessment International Education

Cambridge O Level

CANDIDATE NAME

CENTRE NUMBER

CANDIDATE NUMBER

7691868138

PHYSICS **5054/31**

Paper 3 Practical Test **October/November 2024**

1 hour 30 minutes

You must answer on the question paper.

You will need: The materials and apparatus listed in the confidential instructions

INSTRUCTIONS

- Answer **all** questions.
- Use a black or dark blue pen. You may use an HB pencil for any diagrams or graphs.
- Write your name, centre number and candidate number in the boxes at the top of the page.
- Write your answer to each question in the space provided.
- Do **not** use an erasable pen or correction fluid.
- Do **not** write on any bar codes.
- You may use a calculator.
- You should show all your working and use appropriate units.

INFORMATION

- The total mark for this paper is 40.
- The number of marks for each question or part question is shown in brackets [ ].

For Examiner's Use	
1	
2	
3	
4	
Total	

This document has **16** pages. Any blank pages are indicated.

DC (WW/CGW) 336629/4

© UCLES 2024

[Turn over

www.dynamicpapers.com

1 In this experiment, you will measure the volume of a straw by two different methods.

You are provided with:

- two identical round straws
- two set squares
- a 30 cm ruler
- a 50 cm^3 measuring cylinder
- scissors
- paper towels to mop up any spillage.

A container of water is available for you to use.

(a) Method 1

(i) Measure and record the length l of **one** of the straws. Give your answer to the nearest 0.1 cm.

l = ... cm [1]

(ii) Cut **one** of the straws into 5 pieces that are approximately equal in length.

Line up the pieces of straw as shown in Fig. 1.1.

Ensure the pieces of straw are touching.

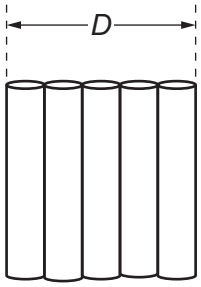

Fig. 1.1

Length D is the width of the 5 pieces of straw placed side by side.

Measure and record the length D for your 5 pieces of straw.

D = ... cm [1]

(iii) Use your answer to **(a)(ii)** to determine the diameter d of **one** straw.

d = ... cm [1]

DO NOT WRITE IN THIS MARGIN

DO NOT WRITE IN THIS MARGIN

DO NOT WRITE IN THIS MARGIN

DO NOT WRITE IN THIS MARGIN

© UCLES 2024

DO NOT WRITE IN THIS MARGIN
DO NOT WRITE IN THIS MARGIN
DO NOT WRITE IN THIS MARGIN
DO NOT WRITE IN THIS MARGIN
DO NOT WRITE IN THIS MARGIN

(iv) Some of the apparatus on your bench is used to ensure that your measurement of *D* is as accurate as possible.

Explain how you use this apparatus to make sure your measurement of *D* is as accurate as possible.

You may draw a diagram to help your explanation.

.....

.....

.....

..... [1]

(v) The volume V_1 of the straw is given by the equation:

$$V_1 = \frac{3.14 d^2 l}{4}$$

Use your answers from **(a)(i)** and **(a)(iii)** to calculate V_1. Give your answer to two significant figures.

V_1 = ... cm^3 [2]

(b) Method 2

Take the second straw.

Immerse the straw fully in the container of water as shown in Fig. 1.2.

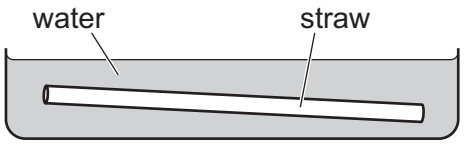

Fig. 1.2

Move the straw backwards and forwards in the water several times so that the water enters the straw.

Put a finger firmly over one end of the straw and remove the straw from the water.

Put the straw above the open end of the measuring cylinder and remove the finger so that the water is transferred into the measuring cylinder.

Repeat this process 5 more times for a total of 6 transfers.

(i) Measure and record the volume of water V_T in the measuring cylinder.

V_T = ... cm^3 [1]

(ii) Calculate the average volume of water V_2 in **one** straw.

V_2 = ... cm^3 [1]

(c) Suggest **two** reasons why V_1 and V_2 are different.

1 .....

.....

2 .....

.....

[2]

[Total: 10]

DO NOT WRITE IN THIS MARGIN
DO NOT WRITE IN THIS MARGIN
DO NOT WRITE IN THIS MARGIN
DO NOT WRITE IN THIS MARGIN
DO NOT WRITE IN THIS MARGIN

BLANK PAGE

DO NOT WRITE IN THIS MARGIN
DO NOT WRITE IN THIS MARGIN
DO NOT WRITE IN THIS MARGIN
DO NOT WRITE IN THIS MARGIN
DO NOT WRITE IN THIS MARGIN

2 In this experiment you will investigate series and parallel combinations of resistors.

You are provided with:

- the circuit shown in Fig. 2.1 which includes two resistors X and Y
- two extra connecting leads.

The resistors are not identical.

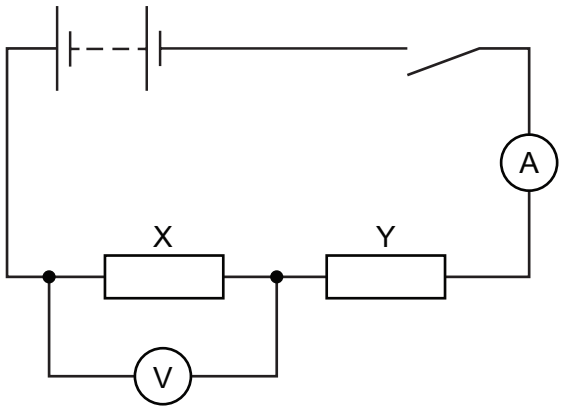

Fig. 2.1

The circuit shown in Fig. 2.1 has been assembled for you.

(a) (i) Close the switch.

Measure and record the potential difference V_X across X and the current I_S in the circuit.

Open the switch.

V_X = ... V

I_S = ... A
[1]

(ii) Calculate the resistance R_X, the resistance of resistor X, using the equation:

$$R_X = \frac{V_X}{I_S}$$

R_X = ... Ω [1]

(iii) Suggest why the switch is opened after the readings of potential difference and current are taken.

.....

..... [1]

DO NOT WRITE IN THIS MARGIN
DO NOT WRITE IN THIS MARGIN
DO NOT WRITE IN THIS MARGIN
DO NOT WRITE IN THIS MARGIN
DO NOT WRITE IN THIS MARGIN

DO NOT WRITE IN THIS MARGIN
DO NOT WRITE IN THIS MARGIN
DO NOT WRITE IN THIS MARGIN
DO NOT WRITE IN THIS MARGIN
DO NOT WRITE IN THIS MARGIN

(iv) Disconnect the voltmeter and reconnect it across Y.

Close the switch.

Measure and record the potential difference V_Y across Y.

Open the switch.

Calculate the resistance R_Y of Y.

V_Y = ... V

R_Y = ... Ω
[1]

(b) (i) Complete the circuit diagram in Fig. 2.2 to show the resistors X and Y connected in **parallel** between W and Z.

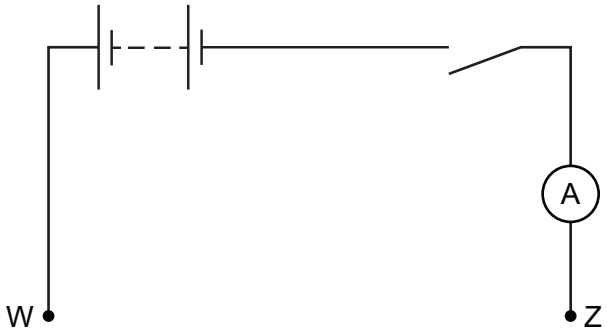

Fig. 2.2

Draw the voltmeter connected to measure the potential difference V_P across **both** resistors. [2]

(ii) Disconnect the resistors and the voltmeter from the circuit on your bench and rearrange them to make the circuit shown in your circuit diagram in **(b)(i)**.

Close the switch.

Measure and record the potential difference V_P across the resistors and the total current through the resistors I_P.

Open the switch.

Calculate the total resistance R_P of the resistors in parallel, using the equation:

$$R_P = \frac{V_P}{I_P}$$

V_P = ... V

I_P = ... A

R_P = ... Ω

[1]

(c) (i) Theory suggests that, if the two resistors are arranged in parallel, the total resistance of the resistors R_T is given by:

$$R_T = \frac{R_X R_Y}{R_X + R_Y}$$

Use the equation and your values of R_X and R_Y from **(a)(ii)** and **(a)(iv)** to calculate R_T.

R_T = ... Ω

[1]

(ii) Two quantities can be considered to be equal within the limits of experimental accuracy if their values are within 10% of each other.

State whether your value of R_P from **(b)(ii)** can be considered equal to R_T calculated in **(c)(i)**.

Support your statement with a calculation.

calculation

statement .....

.....

.....

[2]

[Total: 10]

DO NOT WRITE IN THIS MARGIN
DO NOT WRITE IN THIS MARGIN
DO NOT WRITE IN THIS MARGIN
DO NOT WRITE IN THIS MARGIN
DO NOT WRITE IN THIS MARGIN

* 0000800000009 *

www.dynamicpapers.com

DO NOT WRITE IN THIS MARGIN

DO NOT WRITE IN THIS MARGIN

DO NOT WRITE IN THIS MARGIN

DO NOT WRITE IN THIS MARGIN

DO NOT WRITE IN THIS MARGIN

3 In this experiment you will determine the mass of a metre rule.

You are provided with:

- a metre rule
- a fixed mass taped to the rule at the 5.0 cm mark
- a pivot
- six 10 g slotted masses
- a piece of modelling clay.

The fixed mass has been taped to the metre rule at the 5.0 cm mark. Do not change the position of this mass.

(a) Place the pivot below the 25.0 cm mark on the metre rule, as shown in Fig. 3.1.

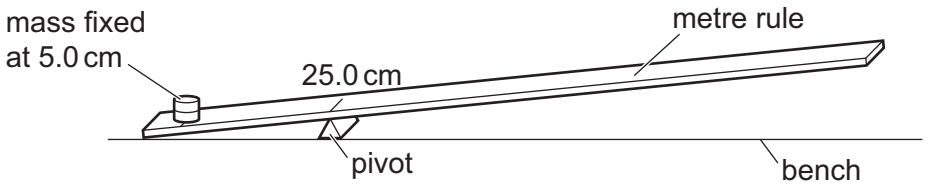

Fig. 3.1

Place two 10 g masses together to make a 20 g mass.

Place the 20 g mass on the metre rule and adjust the position of the mass until the rule is as close to balance as possible.

(i) Determine the distance *d* of the centre of the 20 g mass **from the pivot** when the metre rule is as close to balance as possible.

d = ... cm [1]

(ii) Describe the technique you use to balance the metre rule with the 20 g mass.

.....

.....

..... [1]

(iii) Record in Table 3.1 the distance d of the centre of the mass from the pivot for mass m = 20 g.

Find the distance d of the centre of the mass from the pivot for values of mass m = 30 g, 40 g, 50 g and 60 g, using the 10 g masses provided.

Record all values of d in Table 3.1.

Calculate 1/d for each mass and record all values in Table 3.1.

Give your answers to an appropriate number of significant figures.

Table 3.1

m / g	d / cm	$\frac{1}{d} \Big/ \frac{1}{\text{cm}}$
20		
30		
40		
50		
60		

[2]

(iv) Suggest why a value of d cannot be found for mass m = 10 g.

.....

..... [1]

(b) (i) Using the grid provided in Fig. 3.2 on page 11, plot a graph of 1/d on the y-axis against m on the x-axis.

Start your axes from the origin (0, 0).

Draw the straight line of best fit. [4]

(ii) Calculate the gradient G of your line.

Indicate on the graph the points you use.

Show all your working.

G = ... [2]

© UCLES 2024

DO NOT WRITE IN THIS MARGIN
DO NOT WRITE IN THIS MARGIN
DO NOT WRITE IN THIS MARGIN
DO NOT WRITE IN THIS MARGIN
DO NOT WRITE IN THIS MARGIN

DO NOT WRITE IN THIS MARGIN
DO NOT WRITE IN THIS MARGIN
DO NOT WRITE IN THIS MARGIN
DO NOT WRITE IN THIS MARGIN
DO NOT WRITE IN THIS MARGIN

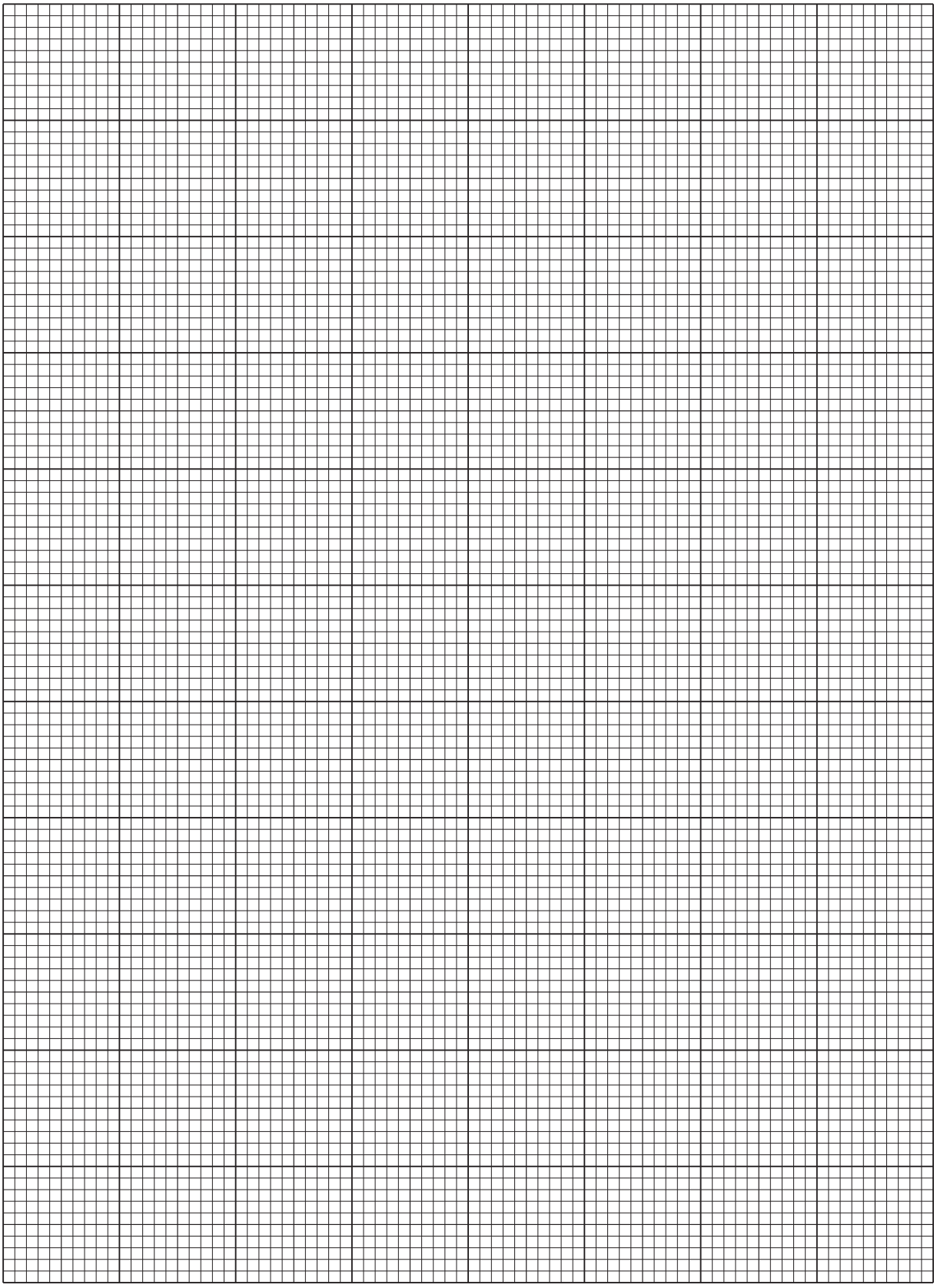

Fig. 3.2

(iii) The mass M of the metre rule can be calculated using the equation:

$$M = 160 - \frac{0.040}{G}$$

Use your value of G in **(b)(ii)** to calculate M.

M = ... g [1]

(c) Remove all the 10 g masses from the metre rule. Do not remove the mass fixed to the rule.

You have been provided with a piece of modelling clay.

Use the apparatus in **(a)** and your graph in **(b)(i)** to find the mass of the piece of modelling clay.

Record any measurements you make and show your working.

mass of piece of modelling clay = ... g [2]

[Total: 14]

DO NOT WRITE IN THIS MARGIN
DO NOT WRITE IN THIS MARGIN
DO NOT WRITE IN THIS MARGIN
DO NOT WRITE IN THIS MARGIN
DO NOT WRITE IN THIS MARGIN

BLANK PAGE

DO NOT WRITE IN THIS MARGIN
DO NOT WRITE IN THIS MARGIN
DO NOT WRITE IN THIS MARGIN
DO NOT WRITE IN THIS MARGIN
DO NOT WRITE IN THIS MARGIN

4 A student uses ice cubes to investigate the time taken for different masses of ice to melt when the ice cubes are placed in water.

Plan an experiment using ice cubes to investigate how the mass of ice affects the time taken for the ice to melt.

You are not required to do this experiment.

The following apparatus is available:

top pan balance
supply of ice cubes
250 cm^3 beaker
supply of cold water
stopwatch.

You may also use other apparatus and materials that are usually available in a school laboratory.

In your plan, you should:

- explain briefly how to do the investigation
- state the key variables to keep constant
- draw a table, with column headings, to show how to display readings (you are not required to enter any readings in the table)
- explain how to use these readings to reach a conclusion.

You do **not** have to include a diagram of the apparatus you use but you may do so if it helps your plan.

.....

.....

.....

DO NOT WRITE IN THIS MARGIN
DO NOT WRITE IN THIS MARGIN
DO NOT WRITE IN THIS MARGIN
DO NOT WRITE IN THIS MARGIN
DO NOT WRITE IN THIS MARGIN

DO NOT WRITE IN THIS MARGIN
DO NOT WRITE IN THIS MARGIN
DO NOT WRITE IN THIS MARGIN
DO NOT WRITE IN THIS MARGIN
DO NOT WRITE IN THIS MARGIN

.....

.....

.....

BLANK PAGE

DO NOT WRITE IN THIS MARGIN

DO NOT WRITE IN THIS MARGIN

DO NOT WRITE IN THIS MARGIN

DO NOT WRITE IN THIS MARGIN

DO NOT WRITE IN THIS MARGIN

Permission to reproduce items where third-party owned material protected by copyright is included has been sought and cleared where possible. Every reasonable effort has been made by the publisher (UCLES) to trace copyright holders, but if any items requiring clearance have unwittingly been included, the publisher will be pleased to make amends at the earliest possible opportunity.

To avoid the issue of disclosure of answer-related information to candidates, all copyright acknowledgements are reproduced online in the Cambridge Assessment International Education Copyright Acknowledgements Booklet. This is produced for each series of examinations and is freely available to download at www.cambridgeinternational.org after the live examination series.

Cambridge Assessment International Education is part of Cambridge Assessment. Cambridge Assessment is the brand name of the University of Cambridge Local Examinations Syndicate (UCLES), which is a department of the University of Cambridge.

© UCLES 2024