www.dynamicpapers.com

Cambridge Assessment International Education

Cambridge O Level

PHYSICS **5054/32**

Paper 3 Practical Test **October/November 2023**

CONFIDENTIAL INSTRUCTIONS

7324533265

This document gives details of how to prepare for and administer the practical exam.

The information in this document and the identity of any materials supplied by Cambridge International are confidential and must NOT reach candidates either directly or indirectly.

The supervisor must complete the report at the end of this document and return it with the scripts.

INSTRUCTIONS

- If you have any queries regarding these confidential instructions, contact Cambridge International stating the centre number, the syllabus and component number and the nature of the query.
  email info@cambridgeinternational.org
  phone +44 1223 553554

DC (CJ/SG) 316717/2
© UCLES 2023

[Turn over

www.dynamicpapers.com

General information about practical exams

Centres must follow the guidance on science practical exams given in the *Cambridge Handbook*.

Safety

Supervisors must follow national and local regulations relating to safety and first aid.

Only those procedures described in the question paper should be attempted.

Supervisors must inform candidates that materials and apparatus used in the exam should be treated with caution. Suitable eye protection should be used where necessary.

The following hazard codes are used in these confidential instructions, where relevant:

C	corrosive	**MH**	moderate hazard
HH	health hazard	**T**	acutely toxic
F	flammable	**O**	oxidising
N	hazardous to the aquatic environment		

Hazard data sheets relating to substances used in this exam should be available from your chemical supplier.

Before the exam

- The packets containing the question papers must **not** be opened before the exam.
- It is assumed that standard school laboratory facilities, as indicated in the *Guide to Planning Practical Science*, will be available.
- Spare materials and apparatus for the tasks set must be available for candidates, if required.

During the exam

- It must be made clear to candidates at the start of the exam that they may request spare materials and apparatus for the tasks set.
- Where specified, the supervisor **must** perform the experiments and record the results as instructed. This must be done **out of sight** of the candidates, using the same materials and apparatus as the candidates.
- Any assistance provided to candidates must be recorded in the supervisor's report.
- If any materials or apparatus need to be replaced, for example, in the event of breakage or loss, this must be recorded in the supervisor's report.

After the exam

- The supervisor must complete a report for each practical session held and each laboratory used.
- Each packet of scripts returned to Cambridge International must contain the following items:
  - the scripts of the candidates specified on the bar code label provided
  - the supervisor's results relevant to these candidates
  - the supervisor's reports relevant to these candidates
  - seating plans for each practical session, referring to each candidate by candidate number
  - the attendance register.

© UCLES 2023

www.dynamicpapers.com

Specific information for this practical exam

During the exam, the supervisor (**not** the invigilator) must do the experiments in Questions 1, 2 and 3 and record the results on a spare copy of the question paper, clearly labelled 'supervisor's results'.

Question 1

Items to be supplied by the centre (per set of apparatus, unless otherwise specified):

- a steel spring (see Note 1)
- a boss, clamp and stand (see Note 2)
- a 30 cm ruler graduated in mm
- a 300 g mass (see Note 3)
- a stop-watch.

Notes

1 An expendable steel spring is suitable, for example a 55 mm long spring of diameter 15 mm. The spring should have a spring constant of around 25 N / m.

The spring must be capable of supporting at least 500 g without overstretching. If new springs are used, they should be conditioned by hand stretching by about 5 cm three times before use.

2 The clamp and stand must be arranged so that the clamp is over the base.

3 A 100 g mass hanger with an extra 2 × 100 g slotted masses is ideal.
If these are not available, a suitable light hook must be provided so that the masses can be suspended from the spring.

Action at changeover

Remove the spring and the masses from the clamp.

Information required by examiners

A sample set of numerical results, clearly marked 'supervisor's results', obtained out of sight of the candidates.

© UCLES 2023

[Turn over

www.dynamicpapers.com

Question 2

Items to be supplied by the centre (per set of apparatus, unless otherwise specified):

- a boss, clamp and stand (see Note 1)
- a 250 cm^3 beaker (see Note 2)
- a thermometer, –10 °C to 110 °C, graduated in 1 °C intervals
- a stop-watch
- a supply of hot water (see Notes 3 and 4)
- a container or sink to collect used hot water
- paper towels to mop up any water spillages.

Notes

1 The boss, clamp and stand must be set up for candidates with the thermometer clamped securely, with its bulb above the beaker, as shown in Fig. 2.1. If possible, clamp the thermometer above the 90 °C mark on the thermometer.

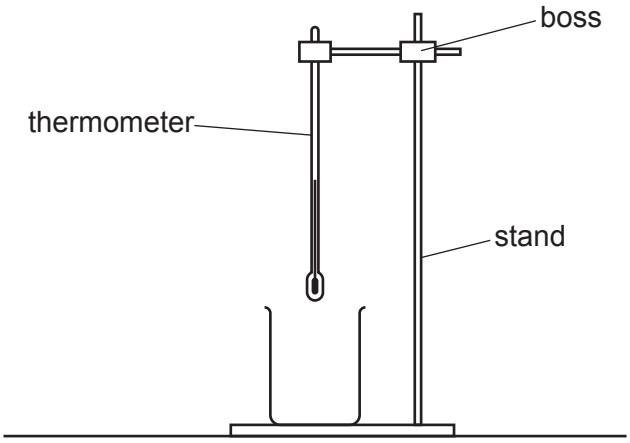

Fig. 2.1

2 If the beaker does not have a graduation at 200 cm^3 on its side, a line should be drawn on the side of the beaker to indicate this volume.

3 The hot water should be maintained at a temperature of approximately 80 ºC and supplied for each candidate by the supervisor. Each candidate will require approximately 200 cm^3 of hot water at two different times during the experiment. The container to collect used hot water should be large enough to hold 500 cm^3 of liquid.

4 Candidates should be warned about the dangers of burns and scalds when using very hot water.

Action at changeover

Empty the water from the beaker and reposition the thermometer as shown in Fig. 2.1.

Information required by examiners

A sample set of numerical results, clearly marked ‘supervisor’s results’, obtained out of sight of the candidates.

© UCLES 2023

www.dynamicpapers.com

Question 3

Items to be supplied by the centre (per set of apparatus, unless otherwise specified):

- a power source of approximately 3 V (see Note 1)
- an ammeter capable of measuring currents up to 1.00 A with a minimum resolution of 0.05 A (see Note 2)
- a voltmeter capable of measuring voltage up to 3 V with a minimum resolution of 0.1 V (see Note 2)
- a resistance wire approximately 110 cm in length (see Note 3)
- a switch (see Note 4)
- a metre rule and insulating tape (see Note 5)
- sufficient connecting leads to set up the circuit shown in Fig. 3.1 (see Note 6)
- a connecting lead attached to a crocodile clip (see Note 6)
- a 1 Ω, 3 W resistor, required **only** if the power supply does **not** consist of dry cells.

Notes

1 The following are suitable power sources:

- two 1.5 V dry cells in suitable holders connected in series
- power supply of 2–3 V.

Where candidates are supplied with a power supply with a variable output voltage, the voltage setting should be set by the supervisor and fixed (e.g. taped).

If the power supply is a power pack instead of dry cells, a 1 Ω, 3 W resistor must be connected in series with the power supply. The resistor must be covered with insulating tape and hidden from the candidates' view.

If cells are used, they must remain adequately charged throughout the examination. Spare cells must be available.

2 Either analogue or digital meters are suitable. Any variable settings must be set by the supervisor and fixed, e.g. taped.

3 30 swg constantan wire is suitable (diameter 0.31 mm, resistance 6.9 Ω/m), or any other wire with a resistance of approximately 7–10 Ω / m.

4 The switch may be an integral part of the power supply.

5 The resistance wire must be fixed to the metre rule with tape between the 5 cm and 10 cm marks and between the 90 cm and 95 cm marks. The resistance wire must also be covered in insulating tape between the 0 cm and 20 cm marks to prevent candidates making electrical contact with the wire in this region.

© UCLES 2023

www.dynamicpapers.com

6 The circuit is to be set up for candidates as shown in Fig. 3.1 with the crocodile clip disconnected from the resistance wire. The end of the wire at the 0 cm mark on the rule must be labelled X.

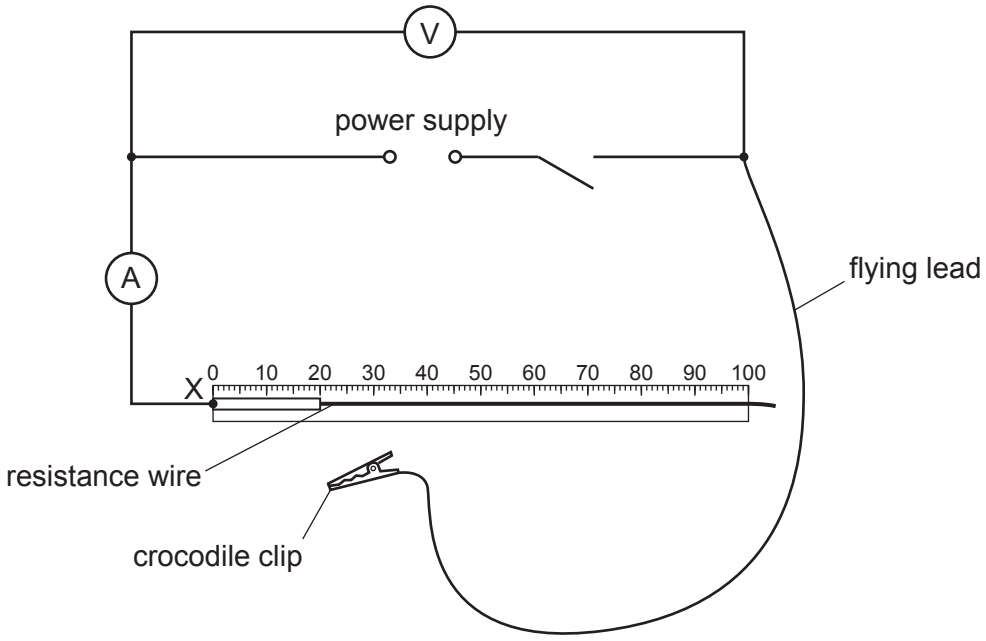

Fig. 3.1

Action at changeover

Ensure that the circuit is connected as shown in Fig. 3.1.

Check that the circuit is working and that an open circuit potential difference of approximately 3 V is obtainable.

Ensure that the switch is open.

Information required by examiners

A sample set of numerical results, clearly marked ‘supervisor’s results’, obtained out of sight of the candidates.

Question 4

Planning question – no apparatus is required for this question.

Permission to reproduce items where third-party owned material protected by copyright is included has been sought and cleared where possible. Every reasonable effort has been made by the publisher (UCLES) to trace copyright holders, but if any items requiring clearance have unwittingly been included, the publisher will be pleased to make amends at the earliest possible opportunity.

To avoid the issue of disclosure of answer-related information to candidates, all copyright acknowledgements are reproduced online in the Cambridge Assessment International Education Copyright Acknowledgements Booklet. This is produced for each series of examinations and is freely available to download at www.cambridgeinternational.org after the live examination series.

Cambridge Assessment International Education is part of Cambridge Assessment. Cambridge Assessment is the brand name of the University of Cambridge Local Examinations Syndicate (UCLES), which is a department of the University of Cambridge.

© UCLES 2023

www.dynamicpapers.com

Supervisor's report

Syllabus and component number | | | | | / | | |

Centre number | | | | | |

Centre name .....

Time of the practical session .....

Laboratory name/number .....

Give details of any difficulties experienced by the centre or by candidates (include the relevant candidate names and candidate numbers).

You must include:
- any difficulties experienced by the centre in the preparation of materials
- any difficulties experienced by candidates, e.g. due to faulty materials or apparatus
- any specific assistance given to candidates.

© UCLES 2023

[Turn over

www.dynamicpapers.com

Declaration

1 Each packet that I am returning to Cambridge International contains all of the following items:
- the scripts of the candidates specified on the bar code label provided
- the supervisor's results relevant to these candidates
- the supervisor's reports relevant to these candidates
- seating plans for each practical session, referring to each candidate by candidate number
- the attendance register.

2 Where the practical exam has taken place in more than one practical session, I have clearly labelled the supervisor's results, supervisor's reports and seating plans with the time and laboratory name/number for each practical session.

3 I have included details of difficulties relating to each practical session experienced by the centre or by candidates.

4 I have reported any other adverse circumstances affecting candidates, e.g. illness, bereavement or temporary injury, directly to Cambridge International on a *special consideration form*.

Signed ..... (supervisor)

Name (in block capitals) .....

© UCLES 2023