www.dynamicpapers.com

Cambridge Assessment International Education

# Cambridge O Level

**PHYSICS** **5054/32**

Paper 3 Practical Test **October/November 2022**

CONFIDENTIAL INSTRUCTIONS

*2069174295*

**This document gives details of how to prepare for and administer the practical exam.**

**The information in this document and the identity of any materials supplied by Cambridge International are confidential and must NOT reach candidates either directly or indirectly.**

**The supervisor must complete the report at the end of this document and return it with the scripts.**

## INSTRUCTIONS

- If you have any queries regarding these confidential instructions, contact Cambridge International stating the centre number, the syllabus and component number and the nature of the query.
  email info@cambridgeinternational.org
  phone +44 1223 553554



DC (CE/JG) 302276/2
© UCLES 2022

**[Turn over**

www.dynamicpapers.com



# General information about practical exams

Centres must follow the guidance on science practical exams given in the *Cambridge Handbook*.

## Safety

Supervisors must follow national and local regulations relating to safety and first aid.

Only those procedures described in the question paper should be attempted.

Supervisors must inform candidates that materials and apparatus used in the exam should be treated with caution. Suitable eye protection should be used where necessary.

The following hazard codes are used in these confidential instructions, where relevant:

| | | | |
|---|---|---|---|
| **C** | corrosive | **MH** | moderate hazard |
| **HH** | health hazard | **T** | acutely toxic |
| **F** | flammable | **O** | oxidising |
| **N** | hazardous to the aquatic environment | | |

Hazard data sheets relating to substances used in this exam should be available from your chemical supplier.

## Before the exam

- The packets containing the question papers must **not** be opened before the exam.
- It is assumed that standard school laboratory facilities, as indicated in the *Guide to Planning Practical Science*, will be available.
- Spare materials and apparatus for the tasks set must be available for candidates, if required.

## During the exam

- It must be made clear to candidates at the start of the exam that they may request spare materials and apparatus for the tasks set.
- Where specified, the supervisor **must** perform the experiments and record the results as instructed. This must be done **out of sight** of the candidates, using the same materials and apparatus as the candidates.
- Any assistance provided to candidates must be recorded in the supervisor's report.
- If any materials or apparatus need to be replaced, for example, in the event of breakage or loss, this must be recorded in the supervisor's report.

## After the exam

- The supervisor must complete a report for each practical session held and each laboratory used.
- Each packet of scripts returned to Cambridge International must contain the following items:
  - the scripts of the candidates specified on the bar code label provided
  - the supervisor's results relevant to these candidates
  - the supervisor's reports relevant to these candidates
  - seating plans for each practical session, referring to each candidate by candidate number
  - the attendance register.

© UCLES 2022

www.dynamicpapers.com



## Specific information for this practical exam

**Number of sets of apparatus**

In addition to a few spare sets, the minimum number of sets of apparatus to be provided should be sufficient to enable candidates to spend 20 minutes with the apparatus for each of Questions 1, 2 and 3, and one hour with the apparatus for Question 4. The order in which candidates answer the questions will be determined by the supervisor. Candidates may spend one hour circulating around Questions 1, 2 and 3, followed by an hour on Question 4, or vice versa.

It is assumed that candidates will supply their own calculator. Candidates should be advised in advance that they may, if they wish, use wrist-watches with stop-watch facilities, providing that such wrist-watches afford the required precision.

© UCLES 2022



[Turn over

www.dynamicpapers.com



**Question 1**

**Items to be supplied by the centre (per set of apparatus, unless otherwise specified):**

- block of wood with nail or screw attached (see Note 1)
- one steel spring (see Note 2)
- thread (see Note 2)
- 30 cm ruler with millimetre divisions
- a small piece of adhesive putty to fix the ruler to the bench
- four 100 g masses.

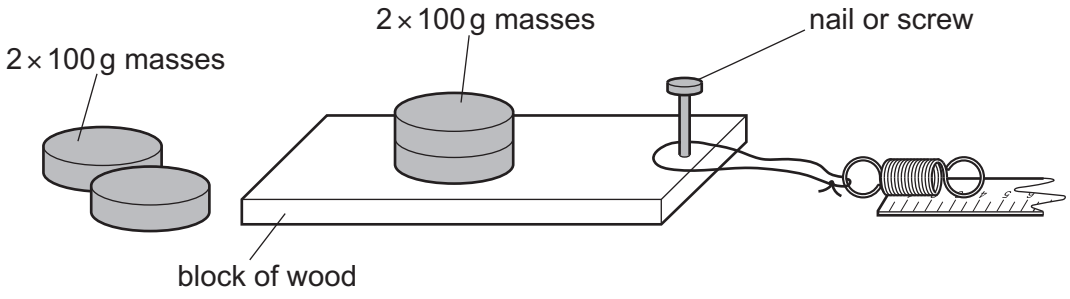


**Fig. 1.1**

**Notes**

**1.** A flat piece of wood with approximate dimensions 15 cm × 4 cm and a thickness of between 1 cm and 2 cm is suitable. A small nail or screw must be fastened at one end as shown in Fig. 1.1. The screw should be approximately 1 cm in from the middle of one narrow end. The loop must be placed over the nail or screw.

**2.** One expendable steel spring, with an unstretched length of approximately 21 mm and a spring constant of approximately 25 N / m, e.g. Philip Harris catalogue number B8G87194. The thread must be made into a loop of approximate length 10 cm and tied to the spring as shown in Fig. 1.1.

**3.** The ruler should be fixed to the bench with the adhesive putty and the apparatus arranged as shown in Fig. 1.1.

**Action at changeover**

The supervisor should ensure that all the apparatus is in the arrangement shown in Fig. 1.1.

**Information required by examiners**

None.

© UCLES 2022

www.dynamicpapers.com



**Question 2**

**Items to be supplied by the centre (per set of apparatus, unless otherwise specified):**

- 250 $cm^3$ **glass** beaker (see Note 1)
- labelled card (see Note 2)
- supply of hot water at approximately 70–80 °C (see Note 3)
- a second beaker to use to fill the first beaker (need not be glass)
- paper towels to mop up any spilled water
- thermometer measuring from –10 °C to 110 °C to a precision of at least 1 °C
- stand, boss and clamp (see Note 4)
- stop-watch reading to 0.1 s or better.

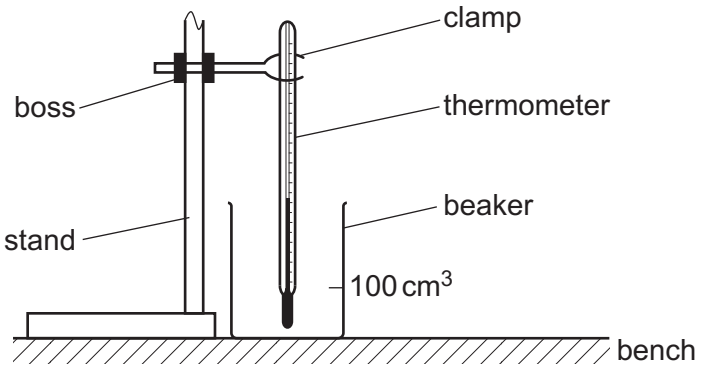


**Fig. 2.1**

**Notes**

**1.** If the beaker is ungraduated, then a line must be drawn at the 100 $cm^3$ level.

**2.** The card must be labelled 'mass *m* of beaker = …… g' and completed by writing in the mass in grams of the beaker.

**3.** This should be supplied by the supervisor, from a pre-heated kettle or water bath, as the candidate requests it. For a large group, more than one kettle of water will be needed.

**4.** The thermometer must be placed in the clamp and the height of the boss on the stand must be adjusted so that the bulb of the thermometer is approximately 1 cm above the bottom of the beaker as shown in Fig. 2.1.

**Action at changeover**

The supervisor must remove any hot water from the beaker and ensure the apparatus is in the configuration shown in Fig. 2.1.

© UCLES 2022

**[Turn over**

www.dynamicpapers.com



**Information required by examiners**

Sample set of numerical results, clearly marked ‘supervisor’s results’, obtained out of sight of the candidates.

www.dynamicpapers.com



**Question 3**

**Items to be supplied by the centre (per set of apparatus, unless otherwise specified):**

- biconvex lens with 15 cm focal length
- graph paper with 2 mm × 2 mm small squares
- stand, boss and clamp to support the lens (see Note 1)
- G-clamp or weight (see Note 2)
- metre rule.

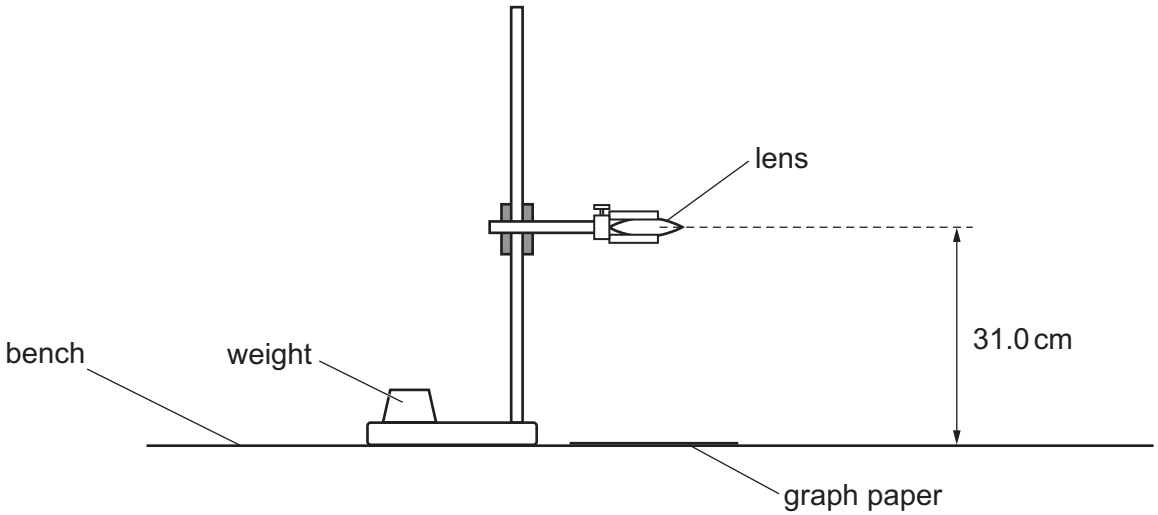


**Fig. 3.1**

**Notes**

**1.** The lens must be held in the jaws of the clamp and the position of the boss on the stand must be adjusted so that the centre of the lens is 31.0 cm above the graph paper and rotated so that the plane of the lens is parallel to the bench.

**2.** To prevent the stand toppling over it should be secured to the bench by fastening it with a G-clamp or by placing a heavy weight on the base.

**Action at changeover**

The supervisor must ensure that the apparatus is in the configuration shown in Fig. 3.1 with the lens as described in Note 1.

**Information required by examiners**

None.

© UCLES 2022

www.dynamicpapers.com



**Question 4**

**Items to be supplied by the centre (per set of apparatus, unless otherwise specified):**

- power supply (see Note 1)
- light-emitting diode (LED) (see Note 2)
- five identical resistors each of resistance 150 Ω, of at least 0.25 W (see Note 3)
- voltmeter, with connecting leads attached and capable of measuring a potential difference of up to 5.0 V to a precision of 0.1 V or better. An analogue or digital meter is suitable (see Note 4)
- switch
- connecting wires and at least 8 crocodile clips (see Note 5).

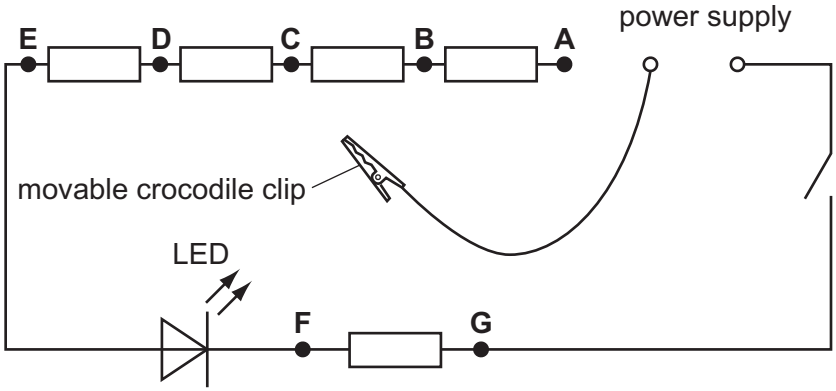


**Fig. 4.1**

**Notes**

**1.** The following are suitable power sources:

- three 1.5 V dry cells in suitable holders connected in series
- four 1.2 V rechargeable cells in suitable holders connected in series
- d.c. power supply of 4.5 V. Where candidates are provided with a power supply with a variable output p.d., the p.d. must be set by the supervisor and fixed (e.g. taped).

**2.** A suitable LED is the Kingbright L-793SRD-D 8 mm Super Bright Red LED 400 mcd. The RS Components stock number is 229-2368. The supervisor should check that the LED lights up when the switch is closed and the movable crocodile clip is attached at point A in the circuit. The crocodile clip should be left unattached for first sight by the candidate.

© UCLES 2022

www.dynamicpapers.com



**3.** Four of the 150 Ω resistors must be connected in series using crocodile clips labelled A to E as shown in Figs. 4.1 and 4.2. There must be room left to attach the movable clip to the wires between each labelled clip and the adjacent resistors.

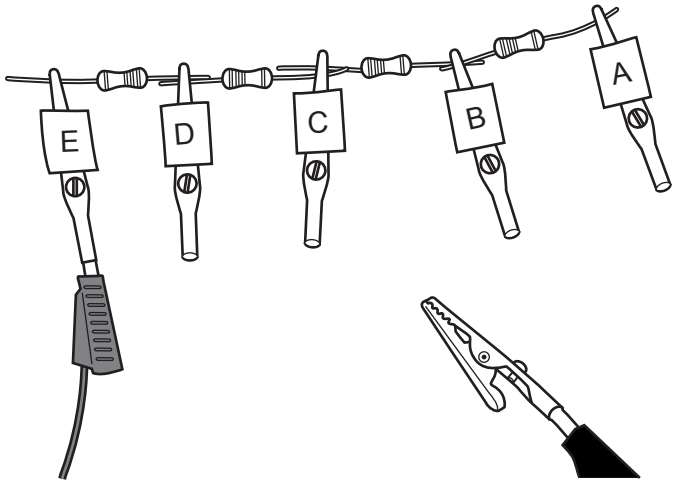


**Fig. 4.2**

The fifth 150 Ω resistor must be connected in series with the other four and the LED, as shown in Fig. 4.1, using crocodile clips labelled F and G.

**4.** The voltmeter must have leads attached so that it may be connected in different parts of the circuit.

**5.** These will be used to construct the circuit shown in Fig. 4.1.

**Action at changeover**

The supervisor must ensure that the circuit is in the configuration shown in Fig. 4.1, that the LED still lights up when the switch is closed, and that the movable crocodile clip is not attached to any point in the circuit. If cells are used, they must be checked and replaced if necessary. The voltmeter and its connecting leads must be detached from the circuit and placed nearby.

**Information required by examiners**

Sample set of numerical results, clearly marked ‘supervisor’s results’, obtained out of sight of the candidates. Additionally, supervisors should note what type of power source is used by candidates for this question – power pack, rechargeable cells or dry cells.

© UCLES 2022

**[Turn over**

www.dynamicpapers.com



**BLANK PAGE**

Permission to reproduce items where third-party owned material protected by copyright is included has been sought and cleared where possible. Every reasonable effort has been made by the publisher (UCLES) to trace copyright holders, but if any items requiring clearance have unwittingly been included, the publisher will be pleased to make amends at the earliest possible opportunity.

To avoid the issue of disclosure of answer-related information to candidates, all copyright acknowledgements are reproduced online in the Cambridge Assessment International Education Copyright Acknowledgements Booklet. This is produced for each series of examinations and is freely available to download at www.cambridgeinternational.org after the live examination series.

Cambridge Assessment International Education is part of Cambridge Assessment. Cambridge Assessment is the brand name of the University of Cambridge Local Examinations Syndicate (UCLES), which is a department of the University of Cambridge.

© UCLES 2022

www.dynamicpapers.com



## Supervisor's report

Syllabus and component number | | | | | / | | |

Centre number | | | | | |

Centre name .....

Time of the practical session .....

Laboratory name/number .....

**Give details of any difficulties experienced by the centre or by candidates (include the relevant candidate names and candidate numbers).**

You must include:
- any difficulties experienced by the centre in the preparation of materials
- any difficulties experienced by candidates, e.g. due to faulty materials or apparatus
- any specific assistance given to candidates.

© UCLES 2022



**[Turn over**

www.dynamicpapers.com



*Space for supervisor to record results, if relevant, e.g. temperature of the laboratory; results for Question 1.*

**Declaration**

1 Each packet that I am returning to Cambridge International contains all of the following items:
- the scripts of the candidates specified on the bar code label provided
- the supervisor's results relevant to these candidates
- the supervisor's reports relevant to these candidates
- seating plans for each practical session, referring to each candidate by candidate number
- the attendance register.

2 Where the practical exam has taken place in more than one practical session, I have clearly labelled the supervisor's results, supervisor's reports and seating plans with the time and laboratory name/number for each practical session.

3 I have included details of difficulties relating to each practical session experienced by the centre or by candidates.

4 I have reported any other adverse circumstances affecting candidates, e.g. illness, bereavement or temporary injury, directly to Cambridge International on a *special consideration form*.

Signed ..... (supervisor)

Name (in block capitals) .....

© UCLES 2022