www.dynamicpapers.com

Cambridge
O Level

Cambridge International Examinations
Cambridge Ordinary Level

CANDIDATE NAME

CENTRE NUMBER

CANDIDATE NUMBER

8372743652

PHYSICS **5054/41**

Paper 4 Alternative to Practical **October/November 2015**

1 hour

Candidates answer on the Question Paper.

No Additional Materials are required.

READ THESE INSTRUCTIONS FIRST

Write your Centre number, candidate number and name on all the work you hand in.
Write in dark blue or black pen.
You may use an HB pencil for any diagrams or graphs.
Do not use staples, paper clips, glue or correction fluid.
DO **NOT** WRITE IN ANY BARCODES.

Answer **all** questions.

Electronic calculators may be used.
You may lose marks if you do not show your working or if you do not use appropriate units.

At the end of the examination, fasten all your work securely together.
The number of marks is given in brackets [ ] at the end of each question or part question.

This document consists of **9** printed pages and **3** blank pages.

DC (AC/FD) 104754/3
© UCLES 2015

CAMBRIDGE
International Examinations

[Turn over

www.dynamicpapers.com

1 **(a)** When freely suspended, a bar magnet will come to rest pointing in a north-south direction.

State which pole of the bar magnet points towards the geographic north of the Earth.

..... [1]

(b) In order to find the direction of geographic north, the magnet must be able to rotate freely in a horizontal plane.

(i) Describe a method of supporting the magnet in air so that it can rotate horizontally.
You may use a diagram in your answer.

.....

.....

..... [2]

(ii) One student suggests floating the magnet on water. Describe how the magnet can be supported on water so that it is able to rotate freely.
You may use a diagram in your answer.

.....

..... [1]

(c) State and explain which of the methods in **(b)** allows the magnet to stop rotating in the shortest time.

.....

.....

.....

..... [1]

© UCLES 2015

www.dynamicpapers.com

2 The manufacturer of 'Super Quilted Paper Towels' claims that these white paper towels are more absorbent than another brand of yellow towels.

A student designs an experiment to investigate the absorbency of paper towels.

The student pours 30 cm^3 of water into a small shallow dish. He then cuts one paper towel into sixteen identical small squares. One small square is immersed in the water and then lifted out using tongs, as shown in Fig. 2.1.

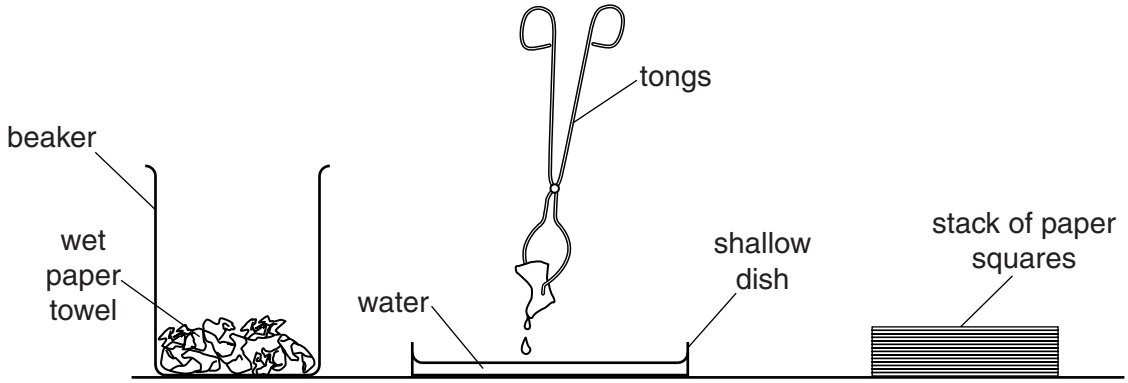

Fig. 2.1 (not to scale)

The student lifts the wet square above the water and gently shakes it twice before placing it in a beaker. He repeats the procedure using more squares until all of the water has been removed from the shallow dish. He records the number of squares needed to remove all of the water.

(a) (i) Suggest a reason why the student shakes each square of towel before placing them in the beaker.

.....

..... [1]

(ii) Explain why the student cuts the towel into small squares rather than using a whole towel.

.....

..... [1]

(iii) Suggest why the student does **not** cut the towel into very small squares.

.....

..... [1]

(b) The student repeats the experiment using different volumes *V* of water and measures the number *N* of squares needed to remove all of the water from the dish.

© UCLES 2015

[Turn over

www.dynamicpapers.com

Fig. 2.2 shows the student's results.

V/cm^3	N
30	15
25	10
20	10
15	7
10	5
5	3

Fig. 2.2

(i) On Fig. 2.3, plot the graph of N on the y-axis against V/cm^3 on the x-axis. Start your axes from the origin. Draw the straight line of best fit.

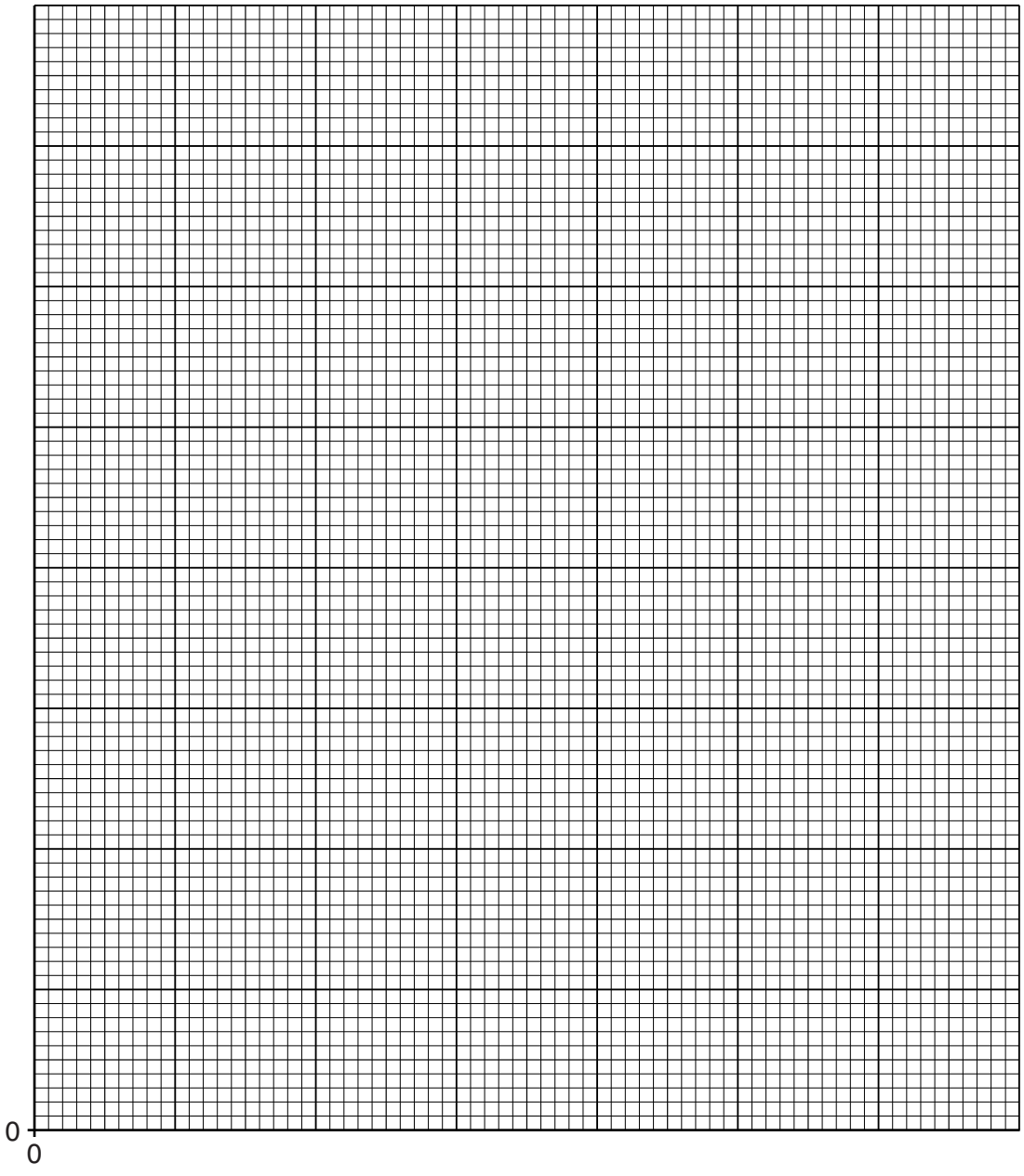

Fig. 2.3

[4]

© UCLES 2015

www.dynamicpapers.com

(ii) Determine the gradient of your line. Show your working.

gradient = ... [1]

(iii) Suggest a reason why the student decides to repeat the reading for $V = 25\,cm^3$.

.....

..... [1]

(iv) The paper towel was cut into 16 identical small squares.
Use your graph to find the volume of water that can be absorbed by a whole paper towel.

volume of water = ... [1]

(c) The student repeats the experiment using the other brand of yellow towels. The graph of N against V/cm^3 for the yellow towels is steeper than the graph for white towels.

State and explain whether the white or yellow paper towels are more absorbent.

.....

..... [1]

(d) The yellow paper towels are smaller than the white paper towels. Explain whether the student should either:

A cut each yellow towel into 16 small squares, **or**

B cut the yellow towel into squares the same size as the squares of the white towel.

.....

.....

..... [1]

© UCLES 2015

[Turn over

www.dynamicpapers.com

3 A student uses a pin-hole camera to produce an image.

The pin-hole camera consists of a light-proof box with a small hole (pin-hole) on one side and a very thin paper screen on the opposite side, as shown in Fig. 3.1.

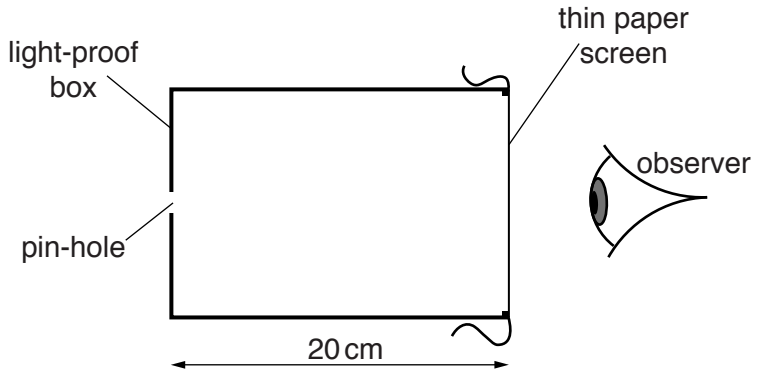

Fig. 3.1 (not to scale)

The student points the pin-hole of the camera towards a bright window, as shown in Fig. 3.2.



Fig. 3.2

Light enters the camera through the pin-hole and produces an image on the thin paper screen.
The student can see the image through the thin paper.
The student observes the image of the window on the screen.

(a) (i) On Fig. 3.2,

1. draw a ray of light from the top **A** of the window, through the pin-hole to the screen, [1]

2. draw a ray of light from the bottom **B** of the window, through the pin-hole to the screen, [1]

3. measure the angle between the two rays of light.

angle = ... [1]

© UCLES 2015

www.dynamicpapers.com

(ii) Explain how you measured the angle as accurately as possible.

.....

..... [1]

(iii) Explain why the image of the window on the screen is inverted.

.....

.....

..... [1]

(b) The pin-hole allows only a small amount of light into the camera, so that the image of the window is not very bright. The student decides to make the pin-hole larger to allow more light into the camera, as shown in Fig. 3.3.



Fig. 3.3

The image formed on the paper screen is now blurred.
On Fig. 3.3, draw two rays from **A** that enter the camera.
Use your diagram to explain why the image is blurred.

.....

.....

..... [1]

www.dynamicpapers.com

4 A student measures the volume of glass used to make a small beaker.

Fig. 4.1 shows a full-size diagram of the beaker.

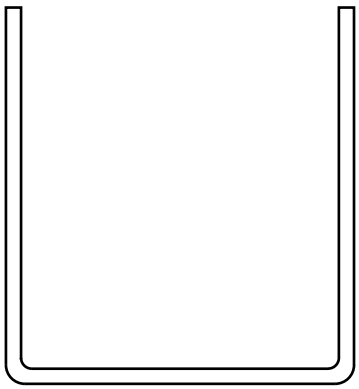

Fig. 4.1 (full size)

(a) (i) On Fig. 4.1, mark and label

1. the external diameter *d* of the beaker,

2. the internal depth *h* of the beaker,

3. the thickness *t* of the glass.

[2]

(ii) By taking measurements from Fig. 4.1, find the values of *d*, *h* and *t*.
Give your answers to the nearest millimetre.

d = ...

h = ...

t = ...

[2]

© UCLES 2015

www.dynamicpapers.com

(iii) An approximate value for the volume V of the glass used to make the beaker is given by the relationship

$$V = \pi dt(h + \frac{d}{4}).$$

Using your values from **a(ii)**, calculate V.
Show your working and give your answer to 2 significant figures.

$V =$ ..... [2]

(b) Suggest suitable measuring instruments to measure t and h accurately on an actual beaker.

measurement of t .....

measurement of h .....

[1]

© UCLES 2015

www.dynamicpapers.com

BLANK PAGE

www.dynamicpapers.com

BLANK PAGE

© UCLES 2015

www.dynamicpapers.com

BLANK PAGE

Permission to reproduce items where third-party owned material protected by copyright is included has been sought and cleared where possible. Every reasonable effort has been made by the publisher (UCLES) to trace copyright holders, but if any items requiring clearance have unwittingly been included, the publisher will be pleased to make amends at the earliest possible opportunity.

To avoid the issue of disclosure of answer-related information to candidates, all copyright acknowledgements are reproduced online in the Cambridge International Examinations Copyright Acknowledgements Booklet. This is produced for each series of examinations and is freely available to download at www.cie.org.uk after the live examination series.

Cambridge International Examinations is part of the Cambridge Assessment Group. Cambridge Assessment is the brand name of University of Cambridge Local Examinations Syndicate (UCLES), which is itself a department of the University of Cambridge.

© UCLES 2015