www.dynamicpapers.com

Cambridge International Examinations
Cambridge Ordinary Level

PHYSICS **5054/31**

Paper 3 Practical Test **October/November 2015**

CONFIDENTIAL INSTRUCTIONS

Great care should be taken to ensure that any confidential information given does not reach the candidates either directly or indirectly.

No access to the Question Paper is permitted in advance of the examination.

4712301368

If you have any problems or queries regarding these Instructions, please contact Cambridge
by e-mail: info@cie.org.uk,
by phone: +44 1223 553554,
by fax: +44 1223 553558,
stating the Centre number, the nature of the query and the syllabus number quoted above.

This document consists of **10** printed pages and **2** blank pages.

© UCLES 2015

www.dynamicpapers.com

Instructions for preparing apparatus

These Instructions detail the apparatus required for each experiment in this paper. No access is permitted to the Question Paper in advance of the examination session.

Number of sets of apparatus

In addition to a few spare sets, the minimum number of sets of apparatus to be provided should be sufficient to enable candidates to spend 20 minutes with the apparatus for each of Questions 1, 2 and 3, and one hour with the apparatus for Question 4. The order in which candidates answer the questions will be determined by the Supervisor. Candidates may spend one hour circulating around Questions 1, 2 and 3, followed by an hour on Question 4, or vice versa.

It is assumed that candidates will supply their own calculator and geometrical instruments, such as a set square, 0° to 180° protractor, pair of compasses and 30 cm rule. Candidates should be advised in advance that they may, if they wish, use quartz wristwatches with stopwatch facilities, providing that such wristwatches afford the required precision.

Instructions for the supervision of the examination

The Supervisor, who may be a Physics teacher, is responsible for the administration of the examination according to the procedures detailed in the Handbook for Centres. In all instances, a Physics teacher should be present. Preferably, this teacher should have been responsible for the preparation of the apparatus. Two invigilators must be present at all times: it is not acceptable for a teacher who has been responsible for preparing the candidates for this paper to be the sole Supervisor or Invigilator.

Supervisors may make the following announcement at the start of the examination.

'The Examiners do not want you to waste time if you are unable to do any experiment. Any candidate who is unable to get results with an experiment may ask for help. The extent of the help given will be reported to the Examiners, who may make a deduction of marks.'

Supervisors should note that a candidate may only be given enough assistance to allow some raw readings or observations to be made. On no account should any assistance be given with the treatment or analysis of these readings and observations.

Supervisors may draw to the attention of the candidates any significant deviation between the apparatus provided and that detailed in the Question Paper, particularly where diagrams are given in the paper.

Candidates should be reminded that all their work should be written on the Question Paper. Rough paper must not be used.

The Supervisor must complete the Report at the back of these Instructions. Details should be given of any significant deviation between the apparatus used and that specified in these Instructions. A sample set of results can often help Examiners. A copy of this Report must be included in **each** packet of scripts.

© UCLES 2015

www.dynamicpapers.com

BLANK PAGE

www.dynamicpapers.com

Question 1

Items to be supplied by the Centre (per set of apparatus, unless otherwise specified).

Two expendable steel springs with spring constants of approximately 25 N/m and with a coil of unstretched length of approximately 2 cm, e.g. Griffin product code 12463080 (legacy number XBV-590-010H) (see Note 1).

Two clamps to act as rods (see Note 2).

Two stands and bosses to support the rods (see Note 3).

G-clamp (see Note 4).

100 g slotted mass hanger.

30 cm ruler with a millimetre scale.

Protractor.

Blu-Tack (see Note 5).

Notes

1. If new springs are used, they should be gently stretched a few times by hand, keeping well within the elastic limit of the springs. The loop at the right hand end of one spring should be tied to the loop at the left hand end of the other spring as shown in Fig. 1.1.

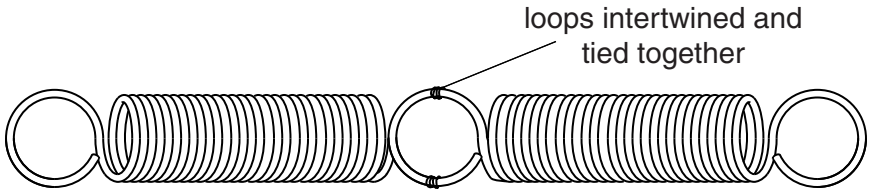

Fig. 1.1

Ideally the two loops should be intertwined before tying since a mass hanger will eventually be suspended from this point. If Griffin springs are not available, alternative springs with similar characteristics may be used, but the springs used at each station should be as identical as possible.

2. The rod end of the clamps should have a minimum length of about 6 cm. The diameter of the rod should be smaller than the diameters of the loops at the end of the springs so that the **candidate** can easily place the loop at the end of a spring onto the rod. The spare loop of one spring will be placed over one rod and the spare loop of the other spring will be placed over the other rod.

3. Each boss and stand will support one rod, as shown in Fig. 1.2. The Supervisor should set the height h_B, shown in Fig. 1.2, so that h_B is 5 cm greater than the length of the mass hanger. Candidates will be told not to adjust this height. The height h_A should be set so that it is 20 cm greater than the length of the mass hanger.

© UCLES 2015

www.dynamicpapers.com

The **candidate** will set up the apparatus as shown in Fig. 1.2. Candidates will need to adjust the height h_A and the separation of the stands by moving stand B along the bench.

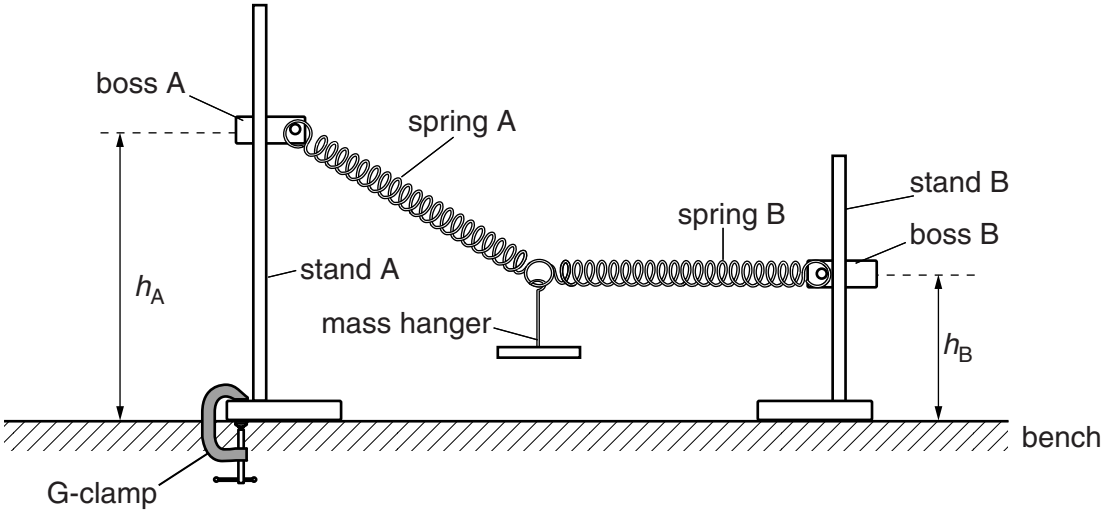

Fig. 1.2

4. The Supervisor should clamp stand A to the bench with the G-clamp. If a G-clamp is not available, a 1 kg mass should be added to the base of stand A to prevent it moving.

5. Two balls of Blu-Tack should be provided, each with an approximate diameter of 1 cm.

6. At the changeover, the Supervisor should
- remove the mass hanger,
- remove the springs and Blu-Tack from the rods,
- ensure that h_A and h_B are as described in Note 3,
- ensure that the protractor and 30 cm ruler are still in place.

Information required by Examiners

Sample set of numerical results, clearly labelled “Supervisor’s Results”, obtained out of sight of the candidates.

© UCLES 2015

www.dynamicpapers.com

Question 2

Items to be supplied by the Centre (per set of apparatus, unless otherwise specified).

250 cm^3 beaker labelled I (see Note 1).

250 cm^3 beaker labelled R (see Note 2).

Filter funnel with glass wool (see Note 3).

100 cm^3 measuring cylinder (see Note 4).

Thermometer with range –10 °C to 110 °C.

Long stirrer (see Note 5).

Paper towels or cloths to mop up spillages.

Notes

1. This beaker should contain an ice / water mixture. The ice / water mixture should be prepared some time before the examination and possibly kept in a refrigerator before the examination. When the mixture is given to the candidates, there should be a minimum of 60 cm^3 of water and at least 20 g of melting ice. Each candidate will therefore require approximately 80 cm^3 of the mixture.

2. This beaker should contain water at room temperature. The water at room temperature should have been left in a container in the laboratory overnight so that it is in thermal equilibrium with its surroundings. Each candidate will require approximately 60 cm^3 of this water.

3. This will be used by the **candidate** to transfer water from the ice/water mixture to the measuring cylinder. The glass wool should be placed in the filter funnel to form a loose plug and prevent ice from falling through.

4. If the measuring cylinder is marked in ml, candidates should be advised that 1 ml ≡ 1 cm^3.

5. Candidates will need to stir the water in the measuring cylinder. The stirrer should therefore be longer than the height of the measuring cylinder.

6. At the changeover, the Supervisor should
- discard the water from the measuring cylinder,
- discard the water from beaker I if all the ice has melted,
- replenish the supply of water in beaker R if necessary,
- replenish the ice/water mixture in beaker I if necessary.

Information required by Examiners

Sample set of numerical results, clearly labelled “Supervisor’s Results”, obtained out of sight of the candidates.

© UCLES 2015

www.dynamicpapers.com

Question 3

Items to be supplied by the Centre (per set of apparatus, unless otherwise specified).

Metre rule with millimetre divisions (see Note 1).

Thin rod to support the metre rule (see Note 2).

Stand, boss and clamp to support the rod (see Note 3).

Pin in a cork (see Note 4).

Stopwatch, reading to 0.1 s or better.

Notes

1. Holes should be drilled in the metre rule at the 5.0 cm mark and the 27.5 cm mark. The diameter of the holes should be slightly greater than the diameter of the rod.

2. The rod should be sufficiently rigid to support the metre rule when it is suspended from the rod.

3. The rod will need to be supported so that the lower end of the metre rule is approximately 5 cm above the floor. The **candidate** will set up the apparatus as shown in Fig. 3.1 with the metre rule suspended over the edge of the bench. The metre rule must be able to swing freely.

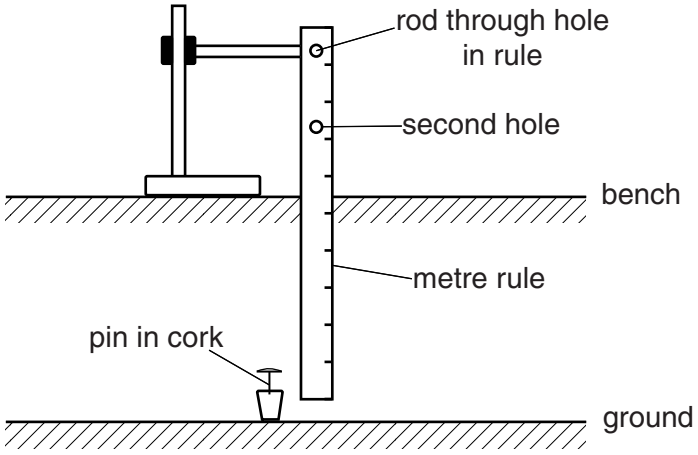

Fig. 3.1

4. This will be used as a fiducial mark by the candidate.

5. At the changeover the Supervisor should dismantle any apparatus left set up by the candidate.

Information required by Examiners

Sample set of numerical results, clearly labelled “Supervisor’s Results”, obtained out of sight of the candidates.

© UCLES 2015

[Turn over

www.dynamicpapers.com

Question 4

Items to be supplied by the Centre (per set of apparatus, unless otherwise specified).

2.5 V to 3.0 V d.c. power supply (see Note 1).

Switch or plug key.

2.5 V filament lamp in a suitable holder (see Note 2).

Sufficient connecting leads to enable the **Supervisor** to set up the circuit shown in Fig. 4.1 (see Note 3).

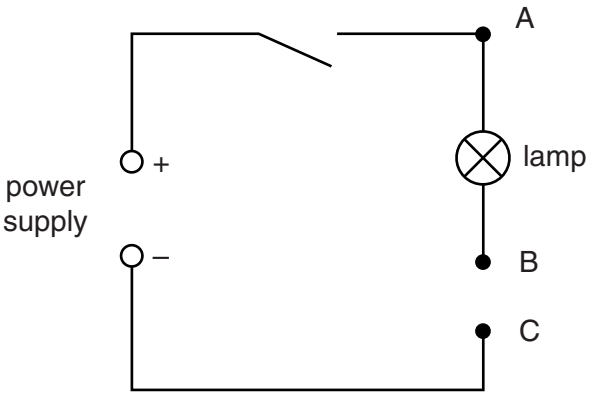

Fig. 4.1

Voltmeter capable of measuring a potential difference of up to 3.0 V to a precision of 0.1 V or better. An analogue or digital meter is suitable (see Note 4).

Three resistors of resistance 4.7 Ω, 10 Ω and 22 Ω (see Note 5).

Six connecting leads to enable the **candidate** to connect the voltmeter and the resistors into the circuit.

Notes

1. Any suitable d.c. power supply may be used. The maximum current in the power supply will be in the region of 0.3 A so, if cells are used, the Supervisor should check them at the changeover to ensure that this current can still be produced. Candidates are instructed to open the switch between readings; this should be announced by the Supervisor at the start of the examination.

2. 2.5 V filament lamps should be used with current ratings of either 200 mA or 250 mA or 300 mA, e.g. RS Components product code 106-329 (200 mA), 106-313 (250 mA) and 655-9312 (300 mA). The filament lamp should be held in a suitable holder with terminals to enable it to be connected to the remainder of the circuit.

3. The points A, B and C in the circuit should be labelled.

4. Supervisors should check that the e.m.f. of the power supply can be measured by the voltmeter. If the voltmeter is off-scale, the power supply voltage should be reduced.

© UCLES 2015

www.dynamicpapers.com

5. The resistors should have a maximum tolerance of ±5% and a power rating of at least 0.5W. Examples of suitable resistors are;

- 4.7Ω RS Components product code 707-8044,
- 10Ω RS Components product code 707-8063,
- 22Ω RS Components product code 707-8097.

The resistors should be labelled with their nominal values. The resistors should have suitable terminals to enable them to be connected into the remainder of the circuit.

6. At the changeover, the Supervisor should

- disconnect the voltmeter and the resistors from the circuit,
- ensure that the circuit is set up as in Fig. 4.1 with the switch open,
- if cells are used, check that the cells can still produce a current of approximately 0.3A with the resistor of resistance 4.7Ω in the circuit between B and C.

Information required by Examiners

Sample set of numerical results, clearly marked “Supervisor’s Results”, obtained out of sight of the candidates.

© UCLES 2015

[Turn over

www.dynamicpapers.com

BLANK PAGE

Permission to reproduce items where third-party owned material protected by copyright is included has been sought and cleared where possible. Every reasonable effort has been made by the publisher (UCLES) to trace copyright holders, but if any items requiring clearance have unwittingly been included, the publisher will be pleased to make amends at the earliest possible opportunity.

To avoid the issue of disclosure of answer-related information to candidates, all copyright acknowledgements are reproduced online in the Cambridge International Examinations Copyright Acknowledgements Booklet. This is produced for each series of examinations and is freely available to download at www.cie.org.uk after the live examination series.

Cambridge International Examinations is part of the Cambridge Assessment Group. Cambridge Assessment is the brand name of University of Cambridge Local Examinations Syndicate (UCLES), which is itself a department of the University of Cambridge.

© UCLES 2015

www.dynamicpapers.com

This form must be completed and returned with the candidates' scripts.

REPORT ON PRACTICAL PHYSICS

The Supervisor is asked to give the following details, using the space provided on page 12.

(a) Information required at the end of the test, as indicated in the Instructions.

(b) Any help given to a candidate.

(c) Any general difficulties encountered in preparing the apparatus.

(d) Any difficulties experienced by particular candidates. These should include reference to difficulties due to faulty apparatus or materials and accidental damage to apparatus or materials. Candidates should be identified by name and candidate number.

Other cases of hardship, such as disability or illness, should be reported to Cambridge in the normal way.

The Supervisor is asked to provide a plan of the work benches, giving details by candidate numbers of the places occupied by the candidates for each session. The plan and report should be enclosed in the envelope containing the candidates' scripts. If more than one envelope is used, a copy of the report must be enclosed in each envelope.

Declaration to be signed by the Principal

The preparation of this practical examination has been carried out so as to maintain fully the security of the examination.

Signed .....

Name (in block capitals) .....

Centre number .....

Centre name .....

© UCLES 2015

www.dynamicpapers.com

Information required

For questions 1, 2, 3 and 4, please enclose a sample set of numerical results, obtained out of sight of the candidates and clearly labelled “Supervisor’s Results”.

Details of difficulties and any help given to candidates

© UCLES 2015