www.dynamicpapers.com

Cambridge O Level

Cambridge International Examinations
Cambridge Ordinary Level

CANDIDATE NAME

CENTRE NUMBER

CANDIDATE NUMBER



PHYSICS **5054/21**

Paper 2 Theory **October/November 2015**

1 hour 45 minutes

Candidates answer on the Question Paper.

No Additional Materials are required.

READ THESE INSTRUCTIONS FIRST

Write your Centre number, candidate number and name on all the work you hand in.
Write in dark blue or black pen.
You may use an HB pencil for any diagrams or graphs.
Do not use staples, paper clips, glue or correction fluid.
DO **NOT** WRITE IN ANY BARCODES.

Section A
Answer **all** questions.
Write your answers in the spaces provided on the Question Paper.

Section B
Answer any **two** questions.
Write your answers in the spaces provided on the Question Paper.

Electronic calculators may be used.
You may lose marks if you do not show your working or if you do not use appropriate units.

At the end of the examination, fasten all your work securely together.
The number of marks is given in brackets [ ] at the end of each question or part question.

This document consists of **19** printed pages and **1** blank page.

© UCLES 2015

CAMBRIDGE International Examinations

www.dynamicpapers.com

Section A

Answer **all** the questions in this section. Answer in the spaces provided.

1 Fig. 1.1 shows an archer firing an arrow at a target during a competition.

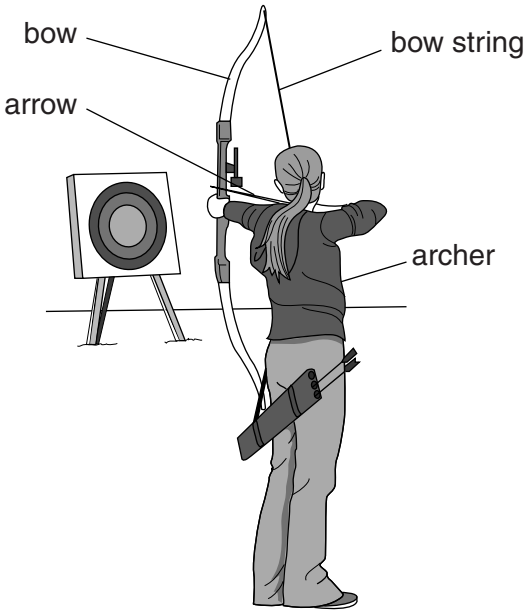

Fig. 1.1

The arrow has a mass of 0.018 kg and is initially at rest. The arrow leaves the bow 0.011 s after the bow string is released. When it leaves the bow, the velocity of the arrow is 95 m/s.

(a) Calculate

(i) the average acceleration of the arrow during the 0.011 s,

average acceleration = ... [2]

(ii) the average force exerted on the arrow during the 0.011 s.

average force = ... [2]

© UCLES 2015

www.dynamicpapers.com

(b) In practice, the force exerted on the arrow gradually decreases to zero during firing.

On Fig. 1.2, sketch a possible speed-time graph for the arrow as it is being fired.

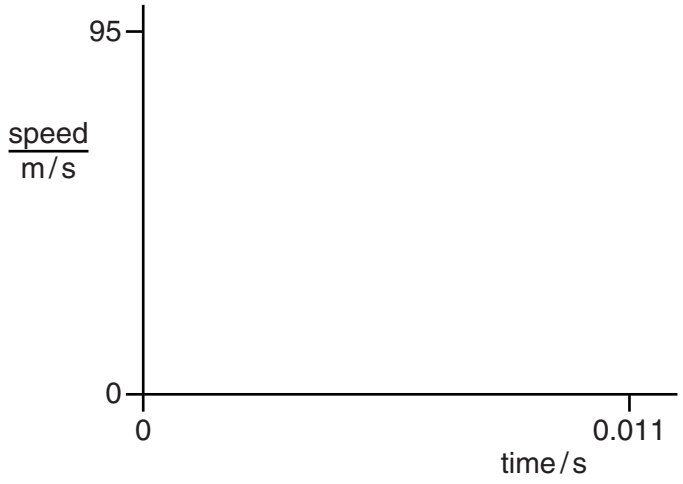

Fig. 1.2

[2]

© UCLES 2015

[Turn over

www.dynamicpapers.com

2 Fig. 2.1 shows a freezer for keeping food frozen.

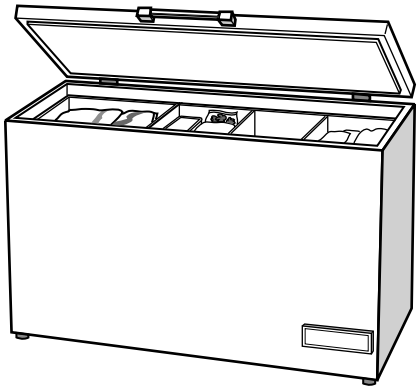

Fig. 2.1

(a) The outside surface of a freezer is painted white.

Explain one advantage of having the outside surface of the freezer painted white.

.....

.....

..... [2]

(b) **(i)** The lid of the freezer is closed and air at room temperature is trapped inside the freezer. The freezer is switched on.

State and explain, using ideas about molecules, what happens to the pressure of the air in the freezer, as it cools.

.....

.....

.....

.....

..... [3]

(ii) When the freezer reaches its operating temperature, it is more difficult to open the lid.

Explain why.

.....

.....

..... [1]

© UCLES 2015

www.dynamicpapers.com

3 A lorry of mass 4.4×10^4 kg travels along a straight, horizontal road at 20 m/s.

(a) Calculate the kinetic energy of the lorry.

kinetic energy = ... [3]

(b) The lorry driver sees an obstruction ahead and applies the brakes. The lorry slows down and stops. The lorry stops a distance of 40 m from where the driver first applies the brakes.

As it slows down, the kinetic energy of the lorry decreases to zero. The kinetic energy decreases as work is done by the braking force exerted on the lorry.

(i) State the formula that relates the work done to the braking force.

.....

.....

..... [1]

(ii) Calculate the braking force exerted on the lorry.

force = ... [2]

www.dynamicpapers.com

4 Fig. 4.1 shows a screwdriver of mass 64 g resting in equilibrium on a pivot.

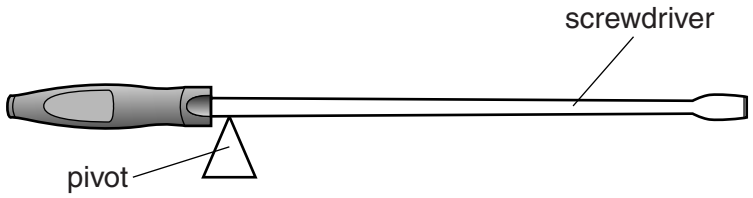

Fig. 4.1

(a) On Fig. 4.1, mark and label with a C, the centre of mass of the screwdriver. [1]

(b) The gravitational field strength is 10 N / kg.

(i) Calculate the weight of the screwdriver.

weight = ... [1]

(ii) On Fig. 4.1, draw an arrow labelled *W* to represent the weight of the screwdriver. [1]

(c) State two conditions that apply when an object is in equilibrium.

1. .....

.....

.....

2. .....

.....

.....

[2]

© UCLES 2015

www.dynamicpapers.com

5 In a steam cleaner, water is heated to its boiling point and is then turned into steam (water in the gas state).

(a) Define *boiling point*.

.....

..... [1]

(b) **(i)** Describe the molecular structure of a liquid.

.....

.....

.....

.....

..... [2]

(ii) Explain, using ideas about molecules, why thermal energy (heat) must be supplied to the water as it boils.

.....

.....

.....

.....

..... [2]

www.dynamicpapers.com

6 A burning candle is placed close to a thin converging lens. The candle acts as the object.

A white, vertical screen is moved to a position on the other side of the lens from the candle.

Fig. 6.1 is a full-scale diagram, on graph paper, of the lens and the screen.

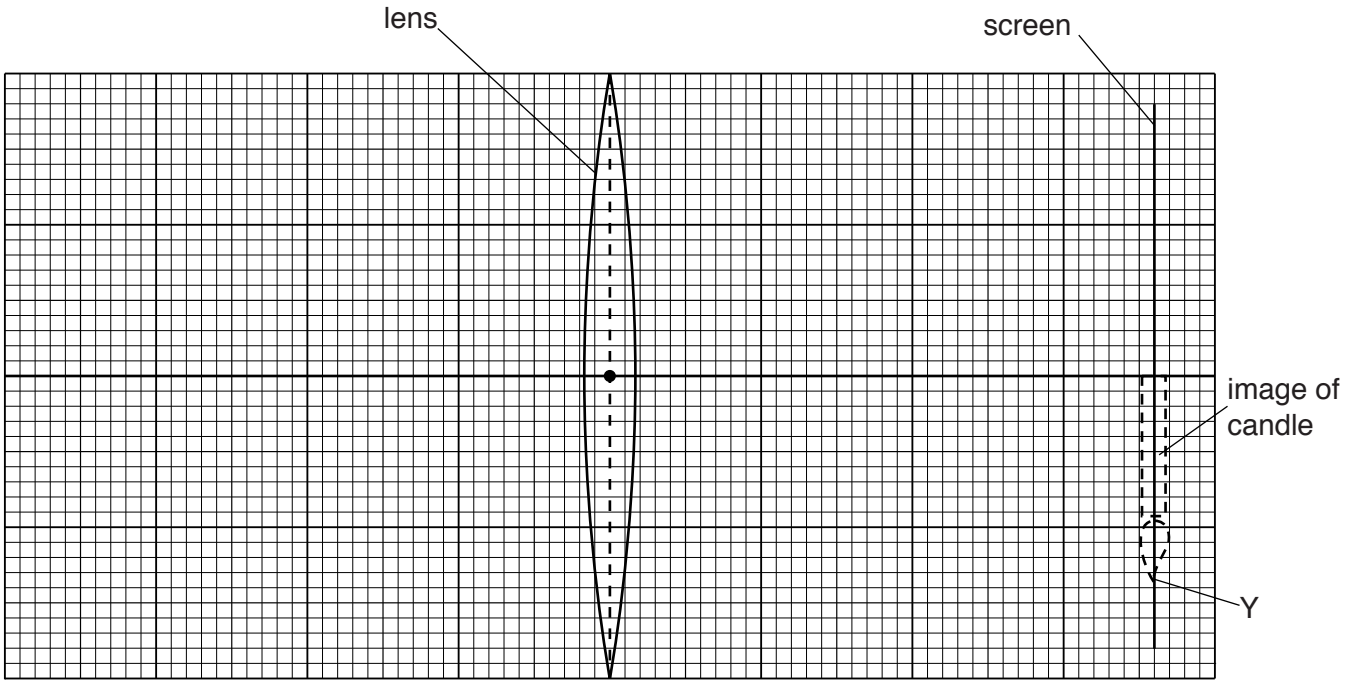

Fig. 6.1

The focal length of the lens is 2.4 cm. The screen is 7.2 cm from the centre of the lens. A sharply focused, inverted image of the candle is produced on the screen, as shown in Fig. 6.1.

(a) Define the term *focal length*.

.....

.....

..... [1]

(b) **(i)** On Fig. 6.1, mark and label with an F, each of the two focal points (principal foci) of the lens. [1]

(ii) The point Y is the tip of the image.

On Fig. 6.1, draw a ray diagram to locate the position of the top of the object. Label this point X. [3]

(iii) Using Fig. 6.1, determine the distance of the candle from the centre of the lens.

distance = ... [1]

© UCLES 2015

www.dynamicpapers.com

7 Audible sound waves and ultrasound waves both consist of compressions and rarefactions.

(a) Describe one difference between a compression and a rarefaction.

.....

.....

..... [1]

(b) In a particular medium, the speed of both audible sound and ultrasound waves is v.

(i) State the equation that relates the wavelength λ of a sound wave to its frequency f.

.....

..... [1]

(ii) Explain how, in this medium, the wavelength of an audible sound wave compares with the wavelength of an ultrasound wave.

.....

.....

.....

..... [1]

(c) Describe one use of ultrasound waves.

.....

.....

.....

.....

..... [2]

© UCLES 2015

[Turn over

www.dynamicpapers.com

8 A potential divider is made from a light-dependent resistor (LDR) and a 6.0 kΩ fixed resistor. The potential divider is connected in series with a 12 V d.c. power supply and a voltmeter is connected across the 6.0 kΩ resistor. Fig. 8.1 is the circuit diagram.

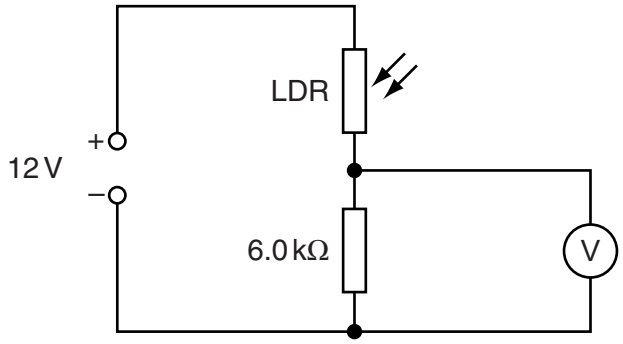

Fig. 8.1

A light shines on the LDR. The resistance of the LDR is 2.0 kΩ.

(a) Calculate

(i) the current in the LDR,

current = ... [2]

(ii) the reading on the voltmeter.

reading = ... [1]

(b) The brightness of the light on the LDR is gradually increased.

State and explain what happens to the reading on the voltmeter.

.....

.....

..... [2]

(c) Suggest a use for a potential divider made from an LDR and a fixed resistor.

.....

..... [1]

© UCLES 2015

www.dynamicpapers.com

Please turn over for Section B

www.dynamicpapers.com

Section B

Answer **two** questions from this section. Answer in the spaces provided.

9 Force is a vector quantity and mass is a scalar quantity.

(a) (i) State how a vector quantity differs from a scalar quantity.

.....

..... [1]

(ii) State one other vector quantity and one other scalar quantity.

vector quantity .....

scalar quantity .....
[2]

(b) An aeroplane flies through the air in a straight line, with its engines at full power. The weight of the aeroplane is 160 kN. There is also a force of 320 kN acting upwards on the aeroplane at 30° to the horizontal.

In the space below, use a graphical method to determine the size and the direction of the resultant of these two forces. Use a scale of 1.0 cm : 40 kN.

size of resultant force = ...

direction of resultant force = ...
[4]

© UCLES 2015

www.dynamicpapers.com

(c) An aeroplane is travelling in a straight line at a constant height. The aeroplane accelerates.

(i) State the energy change that is taking place as the aeroplane accelerates.

.....

.....

..... [2]

(ii) As the aeroplane accelerates, the pilot keeps the engines at constant power. The aeroplane eventually reaches a constant speed.

1. Explain why the aeroplane stops accelerating and reaches a constant speed.

.....

.....

.....

.....

.....

..... [3]

2. When travelling at a constant speed, the pilot directs the aeroplane into a tight turn that follows a circular path.

Explain why the aeroplane is accelerating even though its speed is not changing.

.....

.....

.....

.....

..... [3]

© UCLES 2015

[Turn over

www.dynamicpapers.com

10 (a) Fig. 10.1 shows a solenoid (long coil) X connected in series with a battery, a switch S and a variable resistor (rheostat).

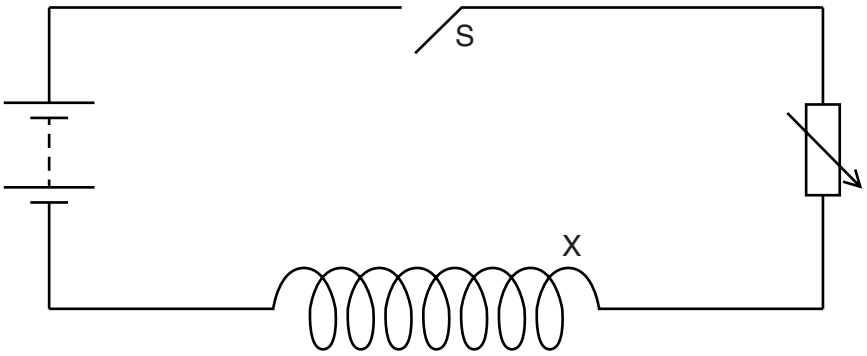

Fig. 10.1

The switch S is closed and there is a magnetic field due to the current in the solenoid.

(i) On Fig. 10.1, draw the pattern of the magnetic field in, above and below the solenoid. [3]

(ii) A second solenoid Y is connected to a sensitive centre-zero ammeter. Solenoid Y is placed in the magnetic field of X.

1. The resistance of the variable resistor is gradually decreased and the pointer of the sensitive ammeter deflects slightly to one side.

Explain why this happens.

.....

.....

.....

.....

.....

.....

..... [3]

© UCLES 2015

www.dynamicpapers.com

2. The switch S is now opened.

Describe and explain what happens to the deflection on the ammeter as the switch is opened.

.....

.....

.....

.....

.....

.....

..... [3]

(b) Fig. 10.2 shows a transformer that consists of two coils wound on an iron core. The transformer is connected to an electricity transmission cable.

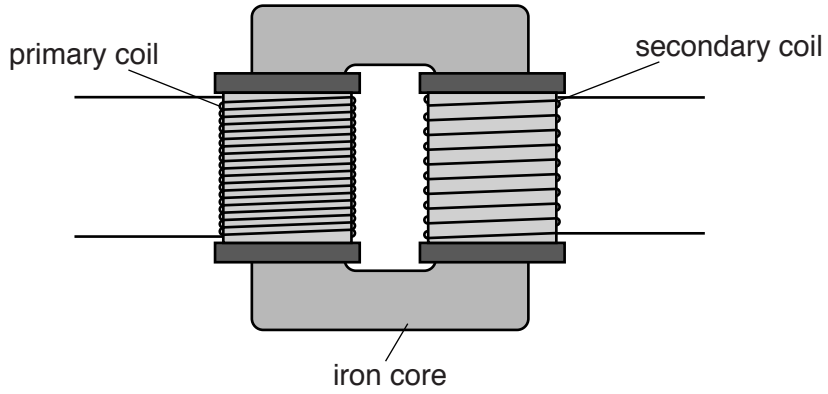

Fig. 10.2

(i) Explain the purpose of the iron core in the transformer.

.....

.....

.....

.....

.....

..... [2]

www.dynamicpapers.com

(ii) The transformer supplies electrical power to a factory at 33 000 V. The current supplied is 85 A.

Calculate

1. the electrical power that the factory is receiving,

power = ... [2]

2. the electrical energy the factory receives in 1.0 hour.

energy = ... [2]

© UCLES 2015

www.dynamicpapers.com

11 Fig. 11.1 shows the proton number and the nucleon number of the nuclei of five neutral atoms.

	neutral atom 1	neutral atom 2	neutral atom 3	neutral atom 4	neutral atom 5
proton number	16	17	18	18	19
nucleon number	35	35	38	40	39

Fig. 11.1

(a) State the two atoms in Fig. 11.1 that

(i) are different isotopes of the same element,

..... [1]

(ii) contain the same number of neutrons,

..... [1]

(iii) contain the same number of electrons.

..... [1]

(b) The nucleus of atom 1 is radioactive and when it decays, it emits a beta-particle.

State, for the nucleus produced by this decay

(i) the proton number,

proton number = ... [1]

(ii) the nucleon number.

nucleon number = ... [1]

© UCLES 2015

[Turn over

www.dynamicpapers.com

(c) A sample contains a large number of radioactive nuclei that emit beta-particles. The sample is placed near to a radiation detector in a laboratory and the count rate is recorded over a long period of time.

Fig. 11.2 shows the count rate recorded by the detector during this period.

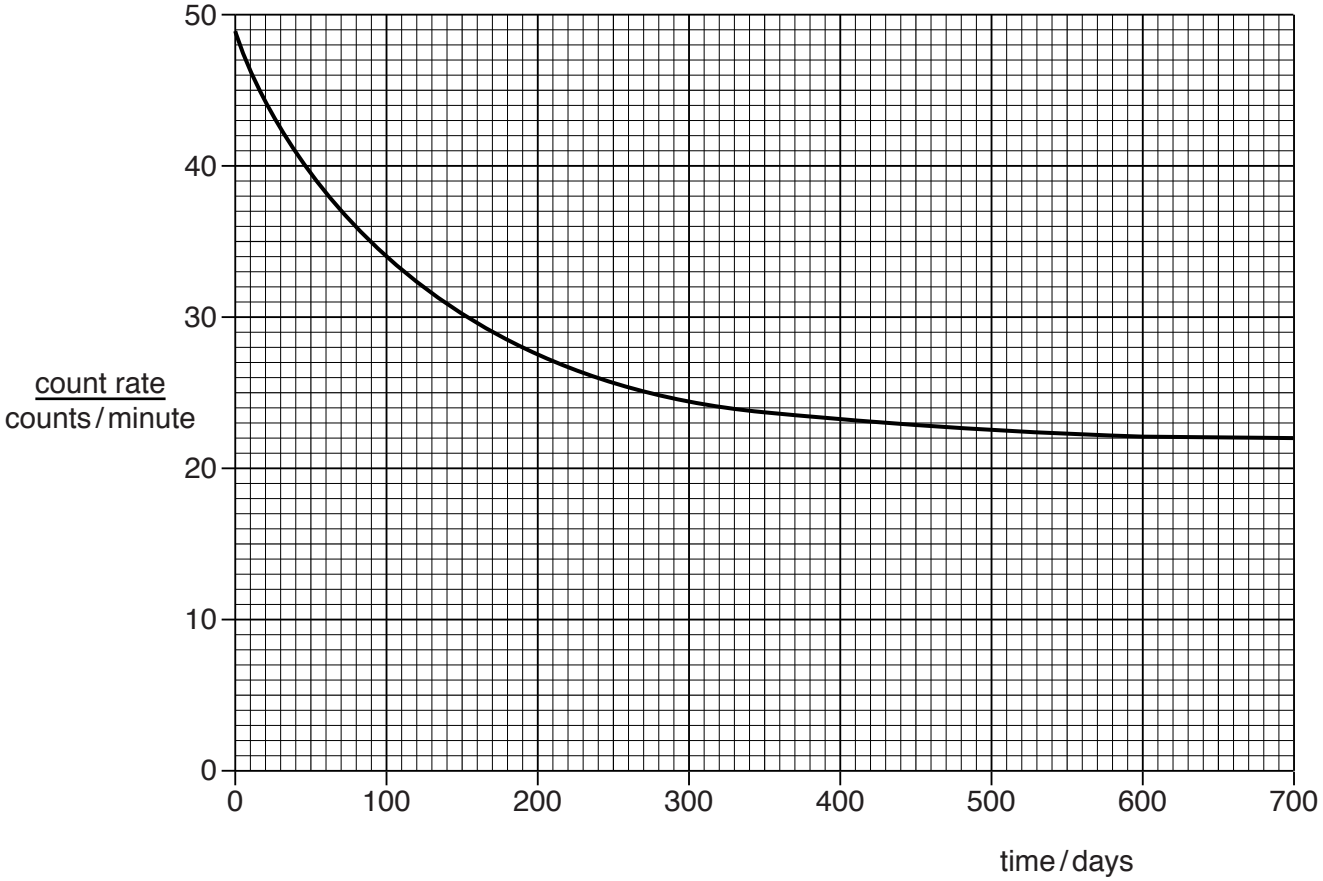

Fig. 11.2

(i) Suggest two major sources of background radiation.

1. .....

2. .....

[2]

© UCLES 2015

www.dynamicpapers.com

(ii) Using Fig. 11.2,

1. determine a value for the background count rate in the laboratory,

background count rate = ... [1]

2. determine the count rate, at time = 0, due to the sample on its own,

count rate due to sample = ... [1]

3. estimate the half-life of the radioactive atoms in the sample.

half-life = ... [2]

(d) A student suggests a change to the experiment in **(c)**. He suggests completely encasing the radiation detector in lead before the sample that emits beta-particles is placed near to it. The effect on the count rate of background radiation may then be ignored.

(i) Describe and explain the effect on the background count rate recorded by the detector of completely encasing the radiation detector in lead.

.....

.....

..... [2]

(ii) State and explain whether the student's suggestion is a sensible one.

.....

.....

..... [2]

© UCLES 2015

www.dynamicpapers.com

BLANK PAGE

Permission to reproduce items where third-party owned material protected by copyright is included has been sought and cleared where possible. Every reasonable effort has been made by the publisher (UCLES) to trace copyright holders, but if any items requiring clearance have unwittingly been included, the publisher will be pleased to make amends at the earliest possible opportunity.

To avoid the issue of disclosure of answer-related information to candidates, all copyright acknowledgements are reproduced online in the Cambridge International Examinations Copyright Acknowledgements Booklet. This is produced for each series of examinations and is freely available to download at www.cie.org.uk after the live examination series.

Cambridge International Examinations is part of the Cambridge Assessment Group. Cambridge Assessment is the brand name of University of Cambridge Local Examinations Syndicate (UCLES), which is itself a department of the University of Cambridge.