www.dynamicpapers.com

Cambridge O Level

Cambridge International Examinations
Cambridge Ordinary Level

PHYSICS **5054/12**

Paper 1 Multiple Choice **October/November 2015**

1 hour

Additional Materials: Multiple Choice Answer Sheet
Soft clean eraser
Soft pencil (type B or HB is recommended)

1808398697

READ THESE INSTRUCTIONS FIRST

Write in soft pencil.
Do not use staples, paper clips, glue or correction fluid.
Write your name, Centre number and candidate number on the Answer Sheet in the spaces provided unless this has been done for you.
DO **NOT** WRITE IN ANY BARCODES.

There are **forty** questions on this paper. Answer **all** questions. For each question there are four possible answers **A**, **B**, **C** and **D**.
Choose the **one** you consider correct and record your choice in **soft pencil** on the separate Answer Sheet.

Read the instructions on the Answer Sheet very carefully.

Each correct answer will score one mark. A mark will not be deducted for a wrong answer.
Any rough working should be done in this booklet.
Electronic calculators may be used.

This document consists of **15** printed pages and **1** blank page.

© UCLES 2015

CAMBRIDGE International Examinations

www.dynamicpapers.com

1 Which is a scalar quantity?

A mass

B force

C velocity

D weight

2 During an experiment to find the density of a stone, the stone is lowered into a measuring cylinder partly filled with water.

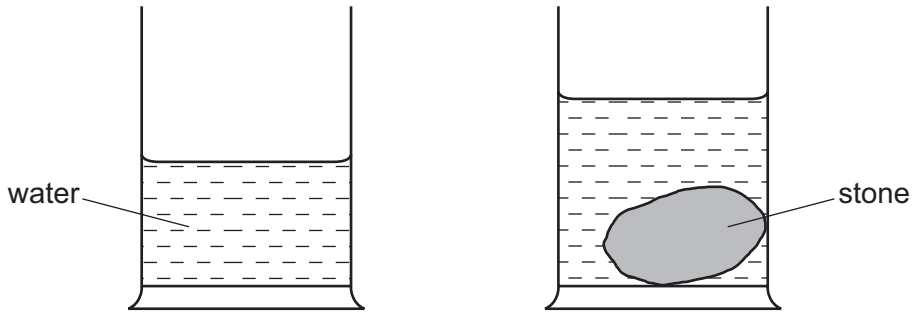

Which statement is correct?

A The difference between the readings gives the density of the stone.

B The difference between the readings gives the volume of the stone.

C The final reading gives the density of the stone.

D The final reading gives the volume of the stone.

3 The diagram shows a micrometer scale.

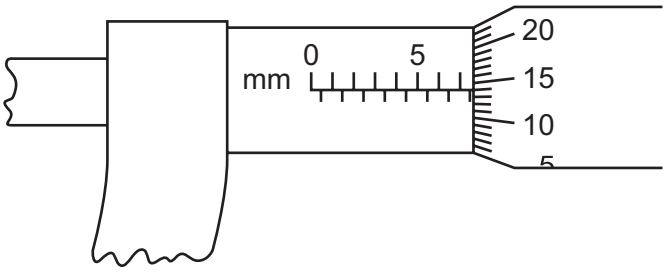

Which reading is shown?

A 5.64 mm **B** 7.14 mm **C** 7.16 mm **D** 7.64 mm

© UCLES 2015

www.dynamicpapers.com

4 A lorry takes 15 minutes to travel along the path PQRS.

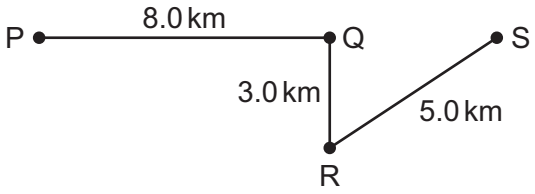

What is the average speed of the lorry?

A 4.0 km/h **B** 22 km/h **C** 48 km/h **D** 64 km/h

5 An apple of mass 0.15 kg and weight 1.5 N falls from a tree. At one point during its fall, the air resistance on the apple is 0.60 N upwards.

What is the acceleration of the apple at this point?

A 4.0 m/s^2 **B** 6.0 m/s^2 **C** 10 m/s^2 **D** 14 m/s^2

6 At time t_1, a stone is dropped from a stationary balloon. The stone reaches terminal velocity at time t_2.

Which row gives the acceleration of the stone at time t_1 and at time t_2?

	acceleration at t_1 / m/s^2	acceleration at t_2 / m/s^2
A	0	0
B	10	0
C	0	10
D	10	10

7 Four of the gravitational forces that act between bodies in the Solar System are described below.

P the force on the Moon due to the Earth

Q the force on the Earth due to the Sun

R the force on the Earth due to the Moon

S the force on the Moon due to the Sun

Which two forces are a Newton's third law pair (action and reaction)?

A P and Q **B** P and R **C** Q and S **D** R and S

© UCLES 2015

[Turn over

www.dynamicpapers.com

8 The diagram represents the Moon in its orbit around the Earth.

Which arrow represents the direction of the resultant force acting on the Moon at the instant shown?

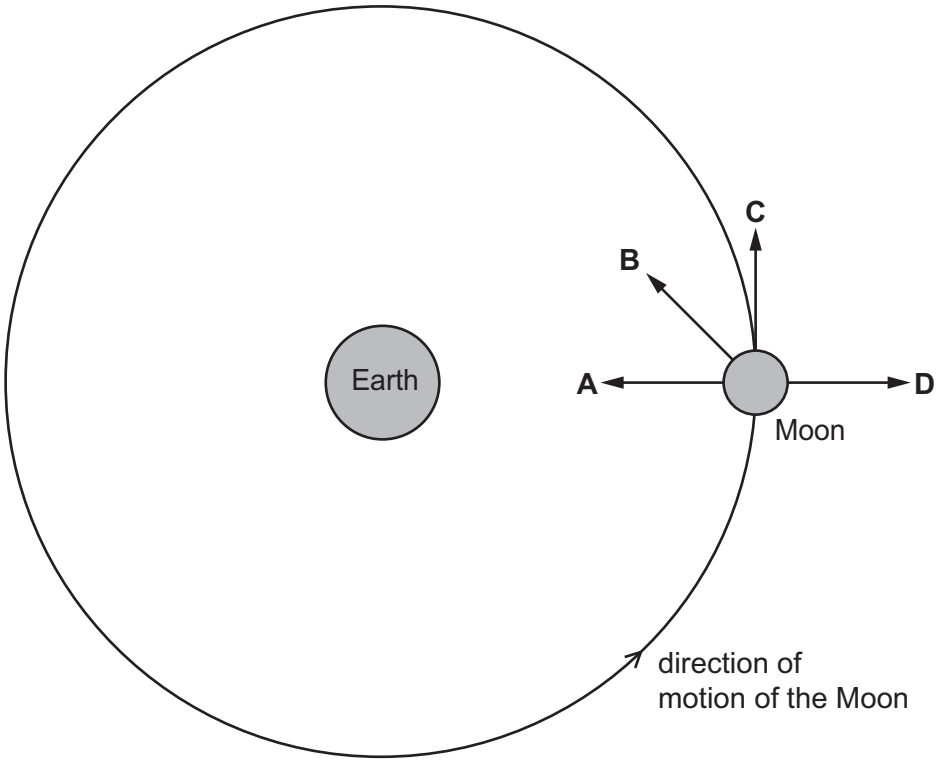

9 A student produces some revision notes on gravity, mass and weight.

Which statement is **not** correct?

A A gravitational field is a region in which a mass experiences a gravitational force.

B Gravitational field strength has the unit of N / kg.

C Mass is a measure of the amount of matter.

D Mass is equal to weight multiplied by gravitational field strength.

© UCLES 2015

www.dynamicpapers.com

10 Two cylinders P and Q are made of copper.

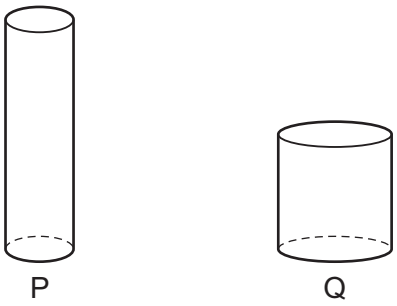

The height of P is twice the height of Q. The diameter of P is half the diameter of Q.

Which statement is correct?

A The density of cylinder P is four times that of cylinder Q.

B The density of cylinder P is twice that of cylinder Q.

C The density of cylinder P is equal to that of cylinder Q.

D The density of cylinder P is half that of cylinder Q.

11 The total weight of the load and the wheelbarrow shown is 600 N.

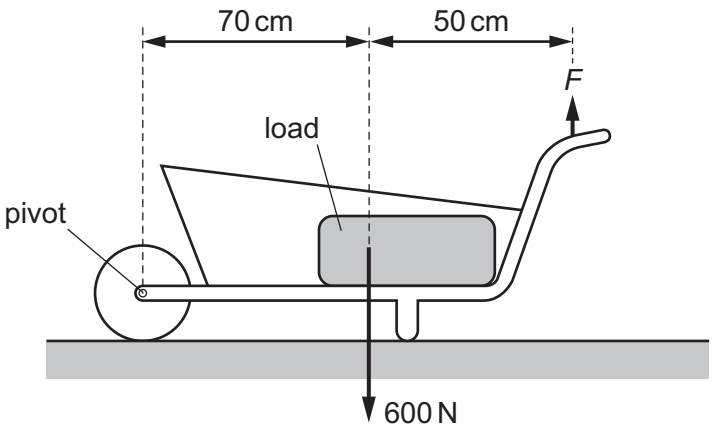

What is the size of force *F* needed just to lift the loaded wheelbarrow?

A 350 N **B** 430 N **C** 600 N **D** 840 N

www.dynamicpapers.com

12 A gas is trapped inside a cylinder by a movable piston. The length of the gas column is 20 cm and the pressure inside the cylinder is p.

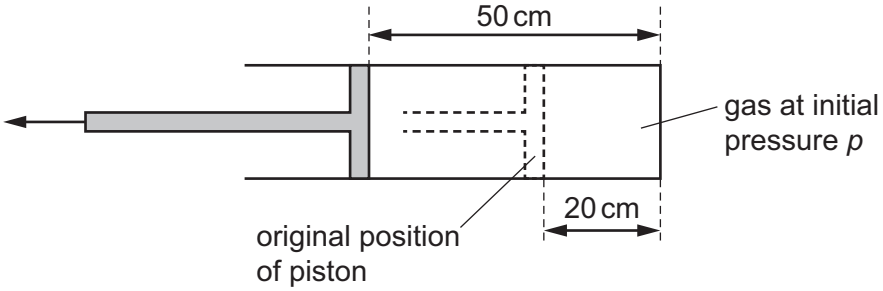

The piston is pulled out a distance of 30 cm, so that the length of the gas column is now 50 cm. The temperature of the gas does not change.

What is the new pressure of the gas?

A 0.40 p **B** 0.60 p **C** 1.5 p **D** 2.5 p

13 The base of a rectangular storage tank is 2.0 m by 3.0 m. The tank is filled with paraffin to a depth of 3.0 m.

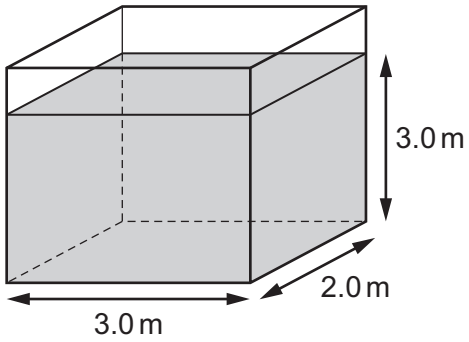

The density of paraffin is 800 kg / m^3 and the gravitational field strength is 10 N / kg.

What is the pressure at the bottom of the tank due to the paraffin?

A 2400 Pa **B** 14 400 Pa **C** 24 000 Pa **D** 144 000 Pa

© UCLES 2015

www.dynamicpapers.com

14 A person throws a stone so that it follows the path shown in the diagram.

In which position does the stone have the most gravitational potential energy?

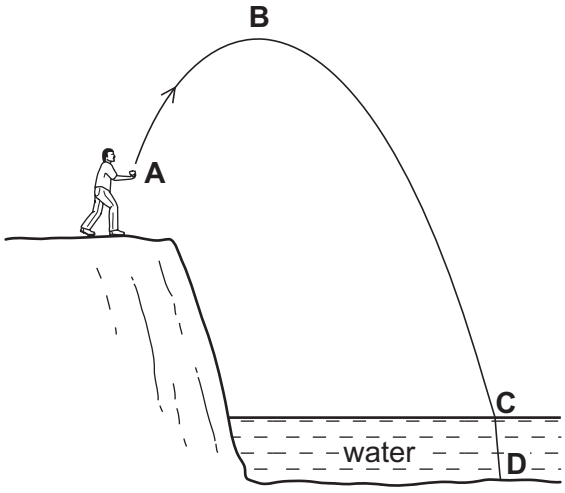

15 A piston of area $10\,cm^2$ is pushed slowly into a very large cylinder containing gas at a pressure of $10\,N/cm^2$. The pressure of the gas remains constant as the piston moves a distance of 0.10 m.

What is the force of the gas on the piston and what is the work done by the piston on the gas?

	force / N	work done / J
A	1.0	0.1
B	1.0	10
C	100	10
D	100	1000

16 A gas is in a sealed container of constant volume. The gas is heated and the pressure of the gas on the walls of the container increases.

How do the particles of the gas cause this increase in pressure?

A They expand.

B They hit each other more frequently.

C They hit the container more frequently.

D They vibrate faster.

© UCLES 2015

[Turn over

www.dynamicpapers.com

17 The diagrams represent four thermometers.

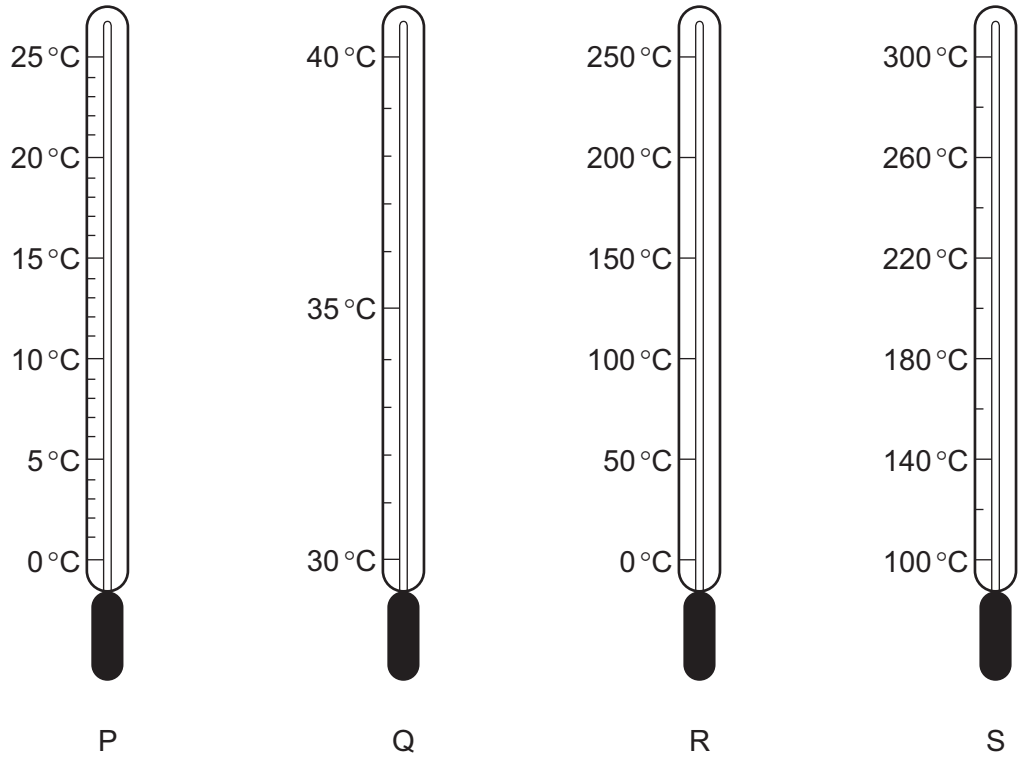

Which thermometer has the greatest sensitivity and which thermometer has the greatest range?

	greatest sensitivity	greatest range
A	P	R
B	P	S
C	Q	R
D	Q	S

© UCLES 2015

www.dynamicpapers.com

18 Some of the liquid in a dish evaporates, as shown in the diagrams.



before evaporation after evaporation

Which molecules leave the liquid and which molecules in the liquid have greater average kinetic energy?

	molecules that leave have	molecules in the liquid have greater average kinetic energy
A	high energy	before evaporation
B	high energy	after evaporation
C	low energy	before evaporation
D	low energy	after evaporation

19 An insulated beaker contains 300 g of water, initially at 30 °C. Water at 100 °C is added until the temperature of the mixture reaches 50 °C.

The specific heat capacity of water is 4.2 J / (g °C).

How much water is added?

A 60 g **B** 120 g **C** 180 g **D** 750 g

20 Which statement is correct?

A Infra-red radiation cannot travel in a vacuum.

B Infra-red radiation cannot travel in solids or in gases.

C Infra-red radiation can only travel in a vacuum.

D Infra-red radiation can travel in a vacuum and in gases.

21 An echo sounder produces ultrasound of frequency 24 kHz. The ultrasound travels in water at a speed of 1.5 km / s.

What is the wavelength in water of ultrasound of this frequency?

A 0.063 m **B** 16 m **C** 36 m **D** 63 m

© UCLES 2015

www.dynamicpapers.com

22 An object is viewed through a converging lens.

The diagram shows the paths of two rays from the top of the object to an eye.

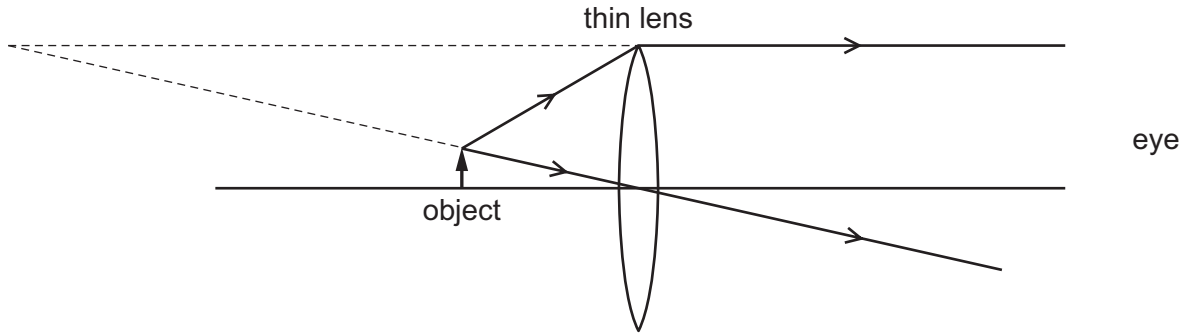

How does the image compare with the object?

A It is larger and inverted.

B It is larger and upright.

C It is smaller and inverted.

D It is smaller and upright.

23 In an experiment using a ripple tank, plane wavefronts arrive at a plane surface.

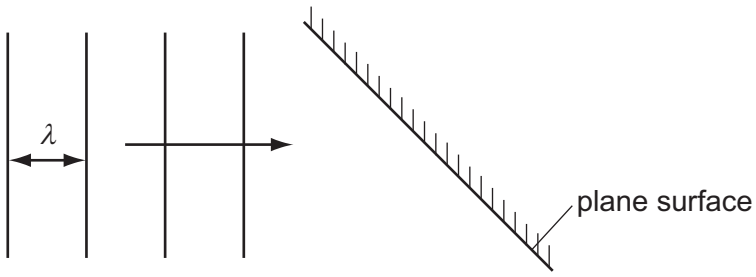

Which row correctly describes the waves after they are reflected from the surface?

	speed of waves	wavelength λ
A	larger	shorter
B	smaller	shorter
C	the same	longer
D	the same	the same

24 Which statement about red light and blue light is correct?

A Red light has a higher frequency than blue light.

B Red light has a longer wavelength than blue light.

C Red light has the same speed in glass as blue light.

D Red light is refracted by a glass prism more than blue light.

© UCLES 2015

www.dynamicpapers.com

25 A loudspeaker produces a sound wave of frequency 50 Hz.
The amplitude of the sound wave is increased.

What is heard?

A a louder sound of a higher pitch

B a louder sound of the same pitch

C a sound of higher pitch but the same loudness

D a sound of the same pitch and loudness as before

26 An ultrasound scanner produces an image of an unborn baby.

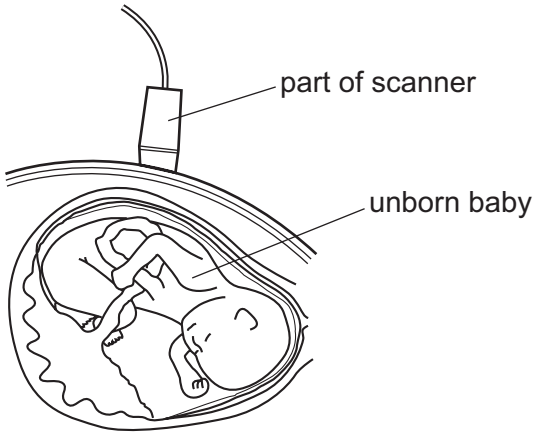

How does the scanner form an image?

A from ultrasound absorbed by the baby

B from ultrasound emitted by the baby

C from ultrasound reflected by the baby

D from ultrasound refracted by the baby

27 The sound from the siren of a ship is reflected by a cliff. An echo is heard by a sailor on the deck of the ship, 4.0 s after the siren is sounded. The speed of sound in air is 320 m / s.

How far from the cliff is the ship?

A 80 m **B** 160 m **C** 640 m **D** 1280 m

28 Which material can be picked up by a magnet?

A aluminium

B copper

C iron

D plastic

© UCLES 2015

[Turn over

www.dynamicpapers.com

29 Which row correctly names an electrical conductor and an insulator?

	electrical conductor	insulator
A	aluminium	iron
B	iron	rubber
C	plastic	aluminium
D	rubber	plastic

30 A positively charged insulated metal sphere is brought close to an uncharged insulated metal sphere.

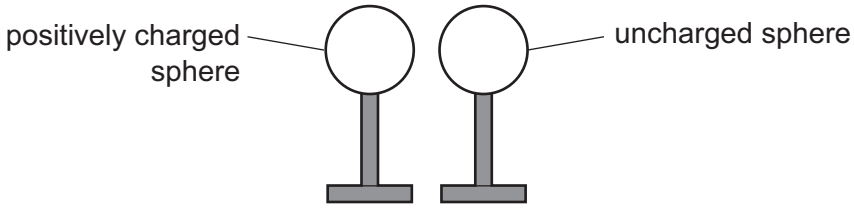

Which diagram shows the charge distribution on the spheres?

A



B

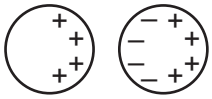

C

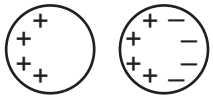

D

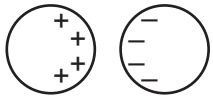

31 The diagram shows the magnetic field around wire X which carries a current into the paper.

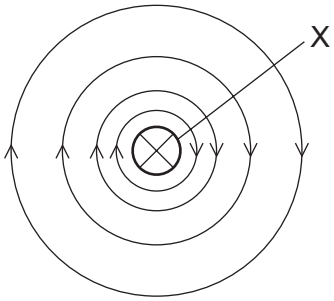

The arrows on the field lines show the direction of the force on

A a N-pole.

B a S-pole.

C a small negative charge.

D a small positive charge.

© UCLES 2015

www.dynamicpapers.com

32 P and Q represent two, parallel, straight wires carrying currents into the plane of the paper. P and Q exert a force on each other.

Which arrow shows the force on Q?

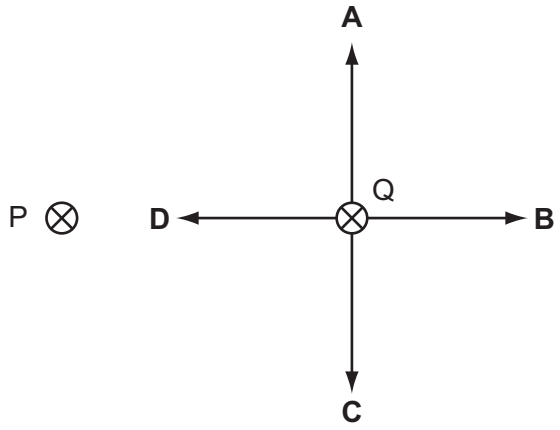

33 A power supply of 18 V is connected to three resistors, as shown.

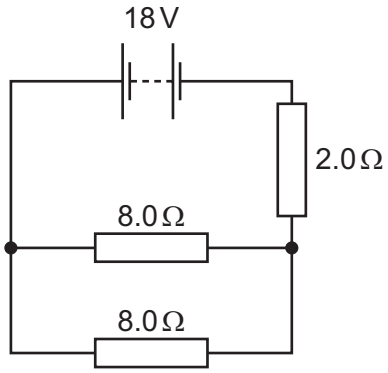

What is the potential difference across the 2.0 Ω resistor?

A 2.0 V **B** 3.6 V **C** 6.0 V **D** 12 V

34 An immersion heater is labelled 24 V, 120 W.

What is the current in the heater when it is connected to a 24 V supply?

A 0.20 A **B** 5.0 A **C** 24 A **D** 120 A

© UCLES 2015

[Turn over

www.dynamicpapers.com

35 Electric power cables transmit electrical energy over large distances using high-voltage, alternating current.

What are the advantages of using a high voltage and of using an alternating current?

	advantage of using a high voltage	advantage of using an alternating current
A	high current is produced in the cable	the resistance of the cable is reduced
B	high current is produced in the cable	the voltage can be changed using a transformer
C	less energy is wasted in the cable	the resistance of the cable is reduced
D	less energy is wasted in the cable	the voltage can be changed using a transformer

36 Which particles are emitted by the hot filament of a cathode-ray oscilloscope (c.r.o.) and which type of field is used to accelerate them?

	particles	type of field
A	electrons	electric
B	electrons	magnetic
C	protons	electric
D	protons	magnetic

37 The diagram shows an electrical device X connected between a 6 V a.c. supply and a 12 V lamp

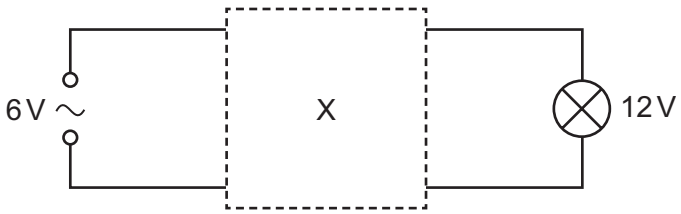

The lamp is seen to glow with normal brightness.

What is X?

A a capacitor

B a potential divider

C a relay

D a transformer

© UCLES 2015

www.dynamicpapers.com

38 In the circuit shown, all lamps are identical. Lamp P lights with normal brightness.

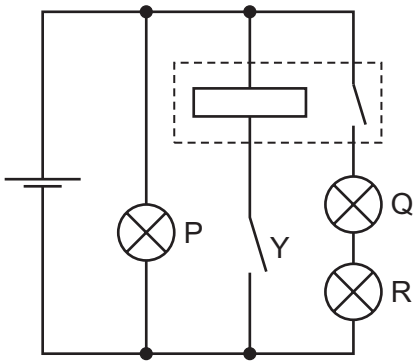

Switch Y is closed and lamps come on.

Which row indicates the brightness of the lamps?

	P	Q	R
A	dim	dim	dim
B	normal	dim	dim
C	normal	off	off
D	off	normal	normal

39 A radioactive isotope ^{14}C emits beta-particles.

A sample of this isotope is left for a period of time that is equal to its half-life.

Which two quantities decrease to **half** of their initial value during this time?

A the decay rate and the number of protons

B the mass of the sample and the number of ^{14}C nuclei

C the number of ^{14}C nuclei and the decay rate

D the number of protons and the mass of the sample

40 In the Geiger-Marsden experiment, a beam of alpha-particles is fired at a very thin sheet of gold foil, in a vacuum.

What is deduced from this experiment?

A Alpha-particles are repelled by electrons.

B Atoms contain air.

C Electrons are found in atomic nuclei.

D Nuclei are much smaller than atoms.

© UCLES 2015

www.dynamicpapers.com

BLANK PAGE

Permission to reproduce items where third-party owned material protected by copyright is included has been sought and cleared where possible. Every reasonable effort has been made by the publisher (UCLES) to trace copyright holders, but if any items requiring clearance have unwittingly been included, the publisher will be pleased to make amends at the earliest possible opportunity.

To avoid the issue of disclosure of answer-related information to candidates, all copyright acknowledgements are reproduced online in the Cambridge International Examinations Copyright Acknowledgements Booklet. This is produced for each series of examinations and is freely available to download at www.cie.org.uk after the live examination series.

Cambridge International Examinations is part of the Cambridge Assessment Group. Cambridge Assessment is the brand name of University of Cambridge Local Examinations Syndicate (UCLES), which is itself a department of the University of Cambridge.