www.dynamicpapers.com

UNIVERSITY OF CAMBRIDGE INTERNATIONAL EXAMINATIONS
General Certificate of Education Ordinary Level

CANDIDATE NAME

CENTRE NUMBER | | | | | |

CANDIDATE NUMBER | | | | |

8977418129

PHYSICS **5054/32**

Paper 3 Practical Test **October/November 2012**

2 hours

Candidates answer on the Question Paper.

Additional Materials: As listed in the Confidential Instructions.

READ THESE INSTRUCTIONS FIRST

Write your Centre number, candidate number and name on all the work you hand in.
Write in dark blue or black pen.
You may use a pencil for any diagrams, graphs or rough working.
Do not use staples, paper clips, highlighters, glue or correction fluid.
DO **NOT** WRITE IN ANY BARCODES.

Answer **all** questions.
For each of the questions in Section A, you will be allowed to work with the apparatus for a maximum of 20 minutes. For the question in Section B, you will be allowed to work with the apparatus for a maximum of 1 hour.

You are expected to record all your observations as soon as these observations are made.
You may lose marks if you do not show your working or if you do not use appropriate units.
An account of the method of carrying out the experiments is **not** required.

At the end of the examination, fasten all your work securely together.
The number of marks is given in brackets [ ] at the end of each question or part question.

For Examiner's Use	
1	
2	
3	
4	
Total	

This document consists of **11** printed pages and **1** blank page.

© UCLES 2012

www.dynamicpapers.com

Section A

Answer **all** questions in this section.

For Examiner's Use

1 *In this experiment, you will investigate the motion of a wooden block on a ramp.*

You have been provided with

- a wooden block with a face labelled A,
- a length of wood that can be used to form a ramp,
- a stand and boss holding a rod that can be used to support the ramp,
- a metre rule,
- a mass of 200 g,
- a piece of Blu-Tack,
- a set square.

(a) Set up the apparatus as shown in Fig. 1.1.

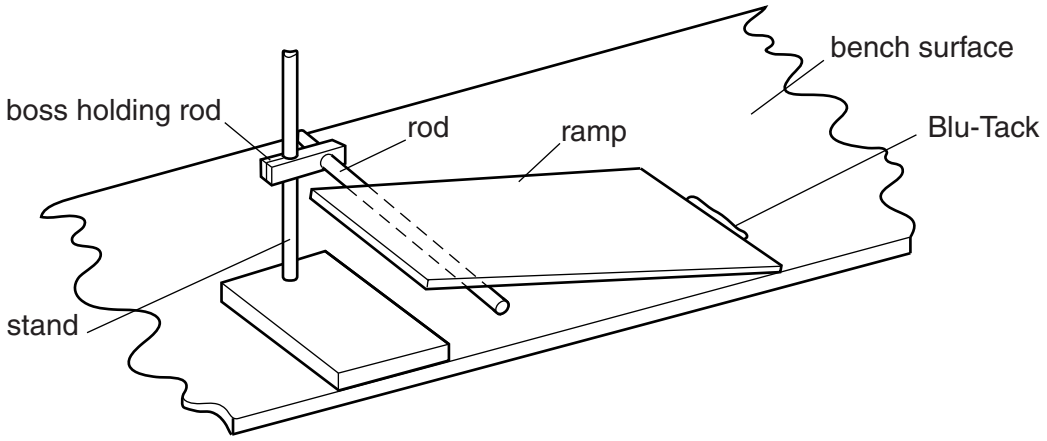

Fig. 1.1

(b) **(i)** Lower the boss holding the rod so that it is as low as possible on the stand. Use some of the Blu-Tack to prevent the end of the ramp sliding across the bench.

Place the wooden block at the top of the ramp with face A downwards. Raise the boss to slowly raise one end of the ramp. As you slowly raise the ramp, keep giving the wooden block small pushes until it moves down the ramp at approximately constant speed. When this happens tighten the boss to the stand so that the ramp is fixed in position. This is shown Fig. 1.2.

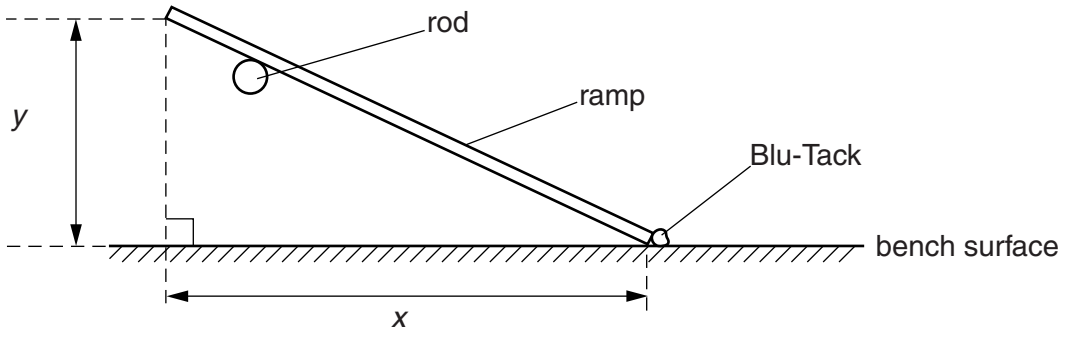

Fig. 1.2

© UCLES 2012

www.dynamicpapers.com

(ii) The distances x and y are the horizontal and vertical distances between the ends of the ramp, as shown in Fig. 1.2. Measure x and y.

For Examiner's Use

x = ...

y = ...

(iii) Calculate the value of y/x.

y/x = ...
[1]

(c) (i) Repeat **(b)** and obtain a new set of values for x, y and y/x.

x = ...

y = ...

y/x = ...
[1]

(ii) Using your two values for y/x, calculate the average value for y/x.

average value for y/x = ...[1]

(d) Use a piece of Blu-Tack to secure the 200 g mass to the wooden block. Repeat **(b)** and **(c)** to obtain a second average value for y/x.

average value for y/x = ...[1]

(e) Theory suggests that the value of y/x does not depend on the total mass of the block. Comment on your results, taking account of this suggestion.

.....

.....

.....[1]

[Total: 5]

© UCLES 2012

[Turn over

www.dynamicpapers.com

2 *In this experiment, you will investigate a light-emitting diode (LED).*

For Examiner's Use

You have been provided with

- a power supply,
- a switch,
- a light-emitting diode (LED),
- a voltmeter,
- a 100 Ω resistor,
- a 330 Ω resistor.

The Supervisor has set up the circuit as shown in Fig. 2.1, with the 100 Ω resistor connected.

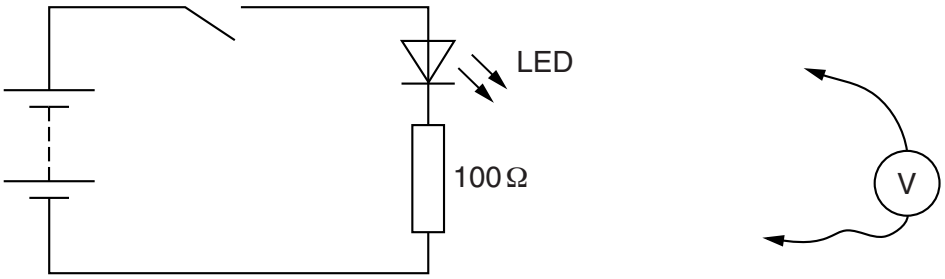

Fig. 2.1

(a) (i) Connect the voltmeter in parallel with the LED. Close the switch and measure the potential difference (p.d.) V_d across the LED.

V_d = ...[1]

(ii) Open the switch and disconnect the voltmeter.

Connect the voltmeter in parallel with the resistor. Close the switch and measure the p.d. V_r across the resistor.

V_r = ...[1]

(iii) Open the switch and disconnect the voltmeter.

Calculate the current I in the circuit using the relationship

$$I = \frac{V_r}{R},$$

where R is the resistance of the resistor that is in the circuit, in this case 100 Ω.

I = ...[1]

© UCLES 2012

www.dynamicpapers.com

(b) Disconnect the 100 Ω resistor from the circuit and replace it with the 330 Ω resistor. Repeat **(a)** to obtain new values for V_d, V_r and I.

For Examiner's Use

V_d = ...

V_r = ...

I = ...

[1]

(c) Comment on the results that you have obtained in **(a)** and **(b)**.

.....

.....

.....[1]

[Total: 5]

www.dynamicpapers.com

3 *In this experiment, you will investigate the extension of a spring when different loads are added.*

For Examiner's Use

You have been provided with

- a spring,
- a stand, two bosses and two clamps,
- a 100 g mass hanger and a 100 g slotted mass,
- a metre rule,
- a set square,
- a piece of modelling clay formed around a hook.

(a) (i) Set up the apparatus as shown in Fig. 3.1.

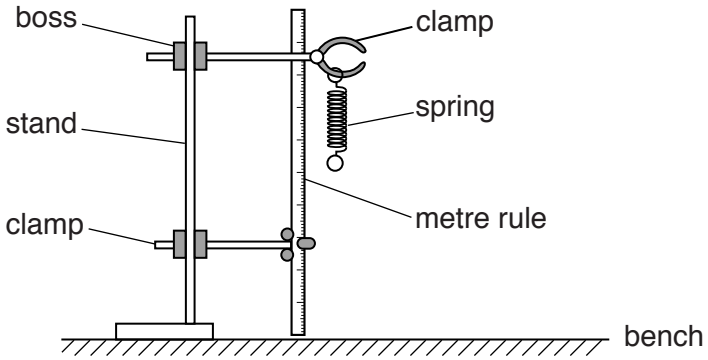

Fig. 3.1

(ii) Explain how you ensured that the metre rule was vertical. You may add to Fig. 3.1 if you wish.

.....

.....

.....[1]

(b) Suspend a 200 g mass from the spring and determine the extension e of the spring.

e = ...[1]

(c) The extension e of the spring is directly proportional to the mass m suspended from it according to the relationship $e = Cm$, where C is a constant. Use your result from **(b)** to determine a value for C.

C = ...[1]

© UCLES 2012

www.dynamicpapers.com

(d) (i) Remove the mass from the spring and suspend the hook with the modelling clay from the spring. Determine the new extension e of the spring.

For Examiner's Use

new e = ...[1]

(ii) Using your answers to **(c)** and **(d)(i)**, calculate the total mass of the modelling clay and the hook.

total mass = ...[1]

[Total: 5]

www.dynamicpapers.com

Section B

For Examiner's Use

4 *In this experiment, you will investigate the motion of a tennis ball rolling down a ramp.*

You have been provided with

- a tennis ball,
- a stopwatch,
- a ramp,
- two metre rules that are attached to the ramp,
- a stop at the end of the ramp,
- a half-metre rule,
- a set square.

The apparatus has been set up as shown in Fig. 4.1. The ramp is supported by a wooden block. Do not disturb the position of the ramp or the wooden block.

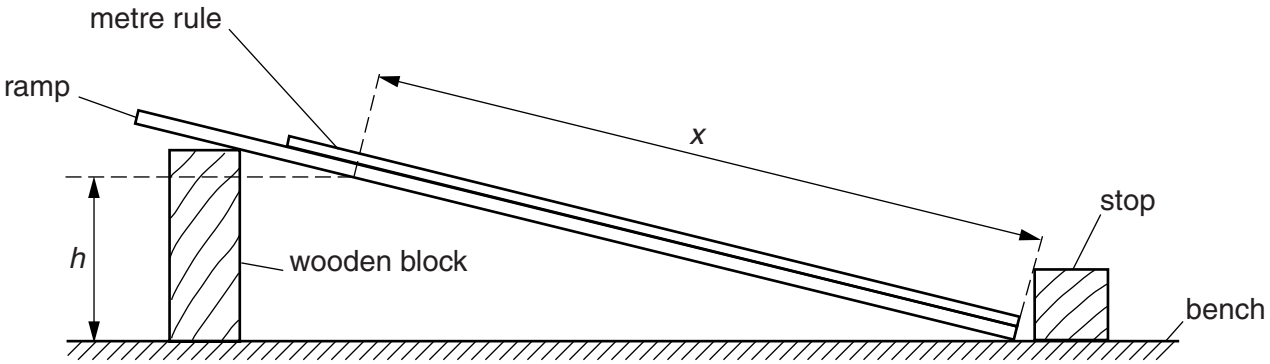

Fig. 4.1

(a) Determine the average time t_{av} for the ball to travel, from rest, a distance x = 90.0 cm to the bottom of the ramp.

t_{av} = ...[2]

(b) Explain how you ensured that the distance travelled by the ball was exactly 90.0 cm.

.....

.....

.....[1]

© UCLES 2012

www.dynamicpapers.com

(c) **(i)** Calculate the final speed v of the ball using the relationship

$$v = \frac{2x}{t_{av}}.$$

For Examiner's Use

v = ... cm/s

(ii) Calculate v^2.

v^2 = ... $(cm/s)^2$
[1]

(d) Measure the height h, above the bench, of the underside of the ramp at the 90.0 cm mark on the metre rule. This height is shown in Fig. 4.1.

h = ...[1]

www.dynamicpapers.com

For Examiner's Use

(e) Release the ball from different positions on the ramp **greater** than 30 cm from the stop. For each position, determine

- the distance x travelled by the ball to the stop,
- the height h of the lower side of the ramp above the bench at the position of release,
- a set of values for the time t for the ball to travel the distance x,
- the average time t_{av} for your set of values of t,
- the final speed v of the ball,
- the value of v^2.

Record your results in Fig. 4.2. Add units to the column headings.
Include your results from **(a)**, **(c)** and **(d)**.

x /	h /	t /	t_{av} /	v / (cm / s)	v^2 / (cm / s)^2

Fig. 4.2

[4]

(f) Using the grid opposite, plot a graph of v^2 / (cm / s)^2 on the y-axis against h / cm on the x-axis. Draw a straight line of best fit through your points. [4]

(g) Determine the gradient of the line of best fit.

gradient = ...[2]

© UCLES 2012

www.dynamicpapers.com

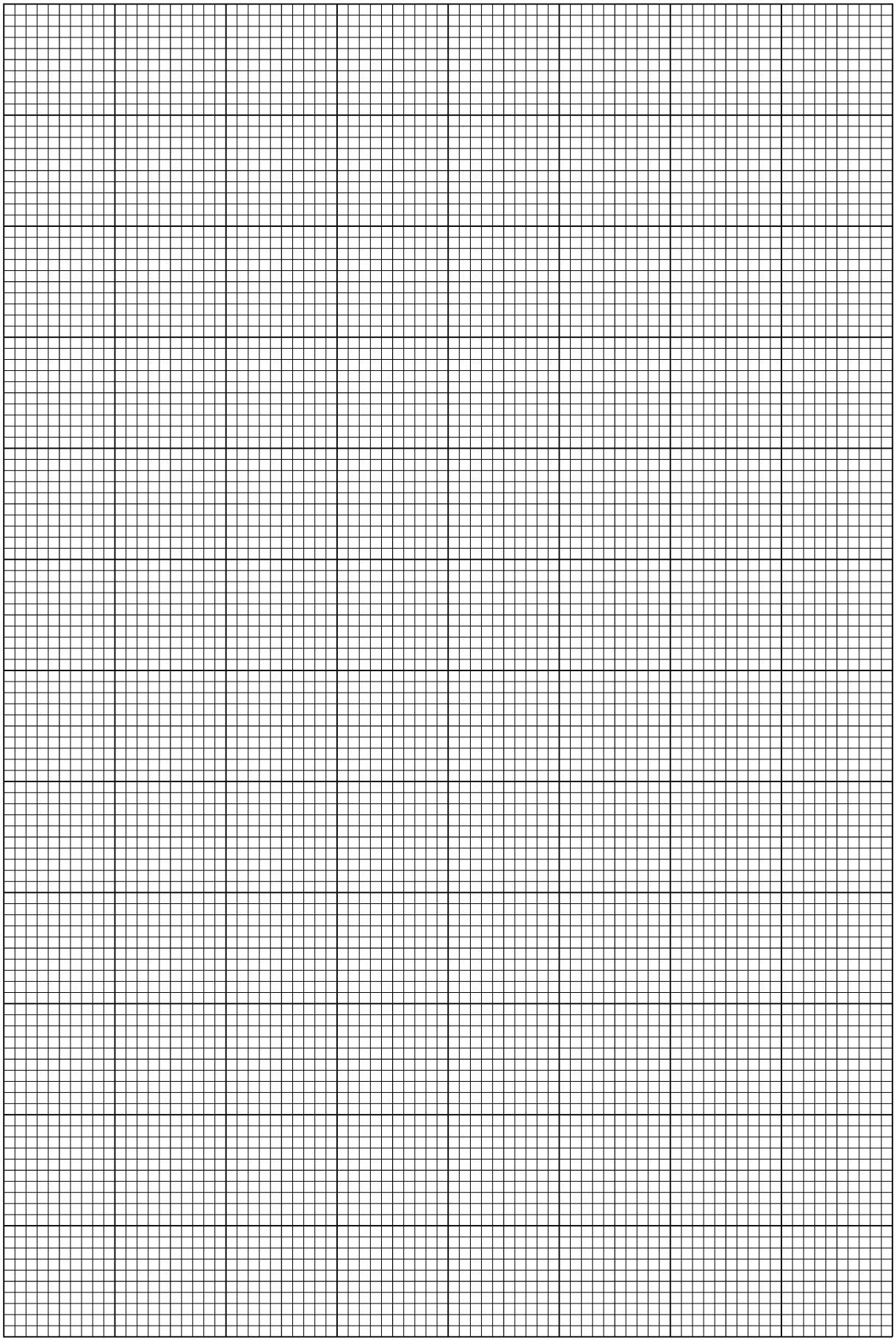

For Examiner's Use

[Total: 15]

© UCLES 2012

www.dynamicpapers.com

BLANK PAGE

Permission to reproduce items where third-party owned material protected by copyright is included has been sought and cleared where possible. Every reasonable effort has been made by the publisher (UCLES) to trace copyright holders, but if any items requiring clearance have unwittingly been included, the publisher will be pleased to make amends at the earliest possible opportunity.

University of Cambridge International Examinations is part of the Cambridge Assessment Group. Cambridge Assessment is the brand name of University of Cambridge Local Examinations Syndicate (UCLES), which is itself a department of the University of Cambridge.

© UCLES 2012