www.dynamicpapers.com

Cambridge Assessment International Education

Cambridge O Level

CANDIDATE NAME									
CENTRE NUMBER						CANDIDATE NUMBER				

5563470231

PHYSICS **5054/42**

Paper 4 Alternative to Practical **May/June 2024**

1 hour

You must answer on the question paper.

No additional materials are needed.

INSTRUCTIONS

- Answer **all** questions.
- Use a black or dark blue pen. You may use an HB pencil for any diagrams or graphs.
- Write your name, centre number and candidate number in the boxes at the top of the page.
- Write your answer to each question in the space provided.
- Do **not** use an erasable pen or correction fluid.
- Do **not** write on any bar codes.
- You may use a calculator.
- You should show all your working and use appropriate units.

INFORMATION

- The total mark for this paper is 40.
- The number of marks for each question or part question is shown in brackets [ ].

This document has **16** pages. Any blank pages are indicated.

DC (PB/SW) 331486/2
© UCLES 2024

[Turn over

www.dynamicpapers.com

1 A student investigates the resistance of a diode when different currents flow through it.

The student sets up the circuit shown in Fig. 1.1.

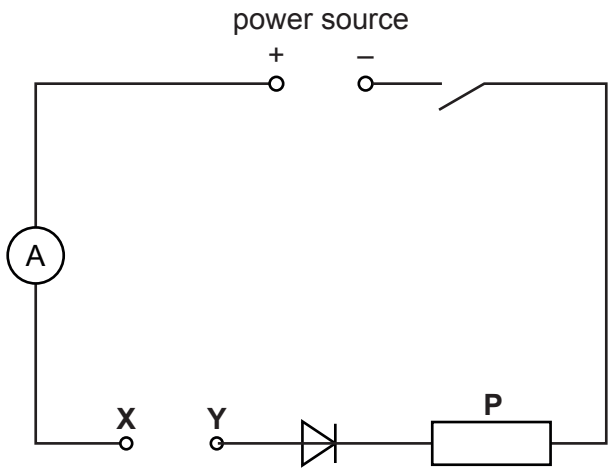

Fig. 1.1

(a) The student connects a voltmeter into the circuit to measure the potential difference (p.d.) across the diode.

On Fig. 1.1, draw the symbol for a voltmeter connected to measure the p.d. across the diode. [1]

© UCLES 2024

www.dynamicpapers.com

(b) The student:

- uses a connecting lead to connect the terminals X and Y together
- closes the switch
- records the voltmeter reading V
- records the ammeter reading I
- opens the switch and removes the connecting lead.

Fig. 1.2 shows the readings on the voltmeter and the ammeter.

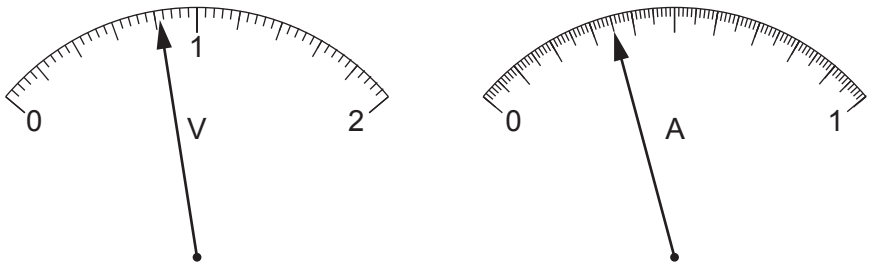

Fig. 1.2

Record the readings shown in Fig. 1.2 in the top row of Table 1.1. [2]

Table 1.1

resistance between X and Y / Ω	voltmeter reading V / V	ammeter reading I / A	resistance of diode R / Ω
0			
3.3	0.82	0.27	3.0
6.8	0.81		3.7
10	0.81	0.19	

(c) Calculate the resistance R of the diode using the equation:

$$R = \frac{V}{I}$$

Record your answer in the top row of Table 1.1 to an appropriate number of significant figures. [2]

(d) The student:

- connects a 3.3 Ω resistor between terminals X and Y
- closes the switch
- records the voltmeter reading V in Table 1.1
- records the ammeter reading I in Table 1.1
- opens the switch and removes the 3.3 Ω resistor
- repeats this procedure for resistors of 6.8 Ω and 10 Ω.

Complete Table 1.1 by inserting the missing values. [2]

© UCLES 2024

[Turn over

www.dynamicpapers.com

(e) As the resistance between terminals X and Y is changed, the current in the circuit changes.

Examine the results shown in Table 1.1.

Describe how the change in **current** affects:

(i) the voltage across the diode .....

..... [1]

(ii) the resistance of the diode. .....

..... [1]

(f) A student sets up a circuit using the diagram shown in Fig. 1.1.

The student finds that, when the connecting lead is connected across the terminals X and Y and the switch is closed, the ammeter does not give a reading.

The ammeter is not broken.

Suggest the error that the student has made while assembling the circuit.

.....

..... [1]

[Total: 10]

© UCLES 2024

www.dynamicpapers.com

BLANK PAGE

www.dynamicpapers.com

2 A student investigates the rate of cooling of hot water in a test-tube under different conditions.

(a) The student:

- arranges a test-tube as shown in Fig. 2.1

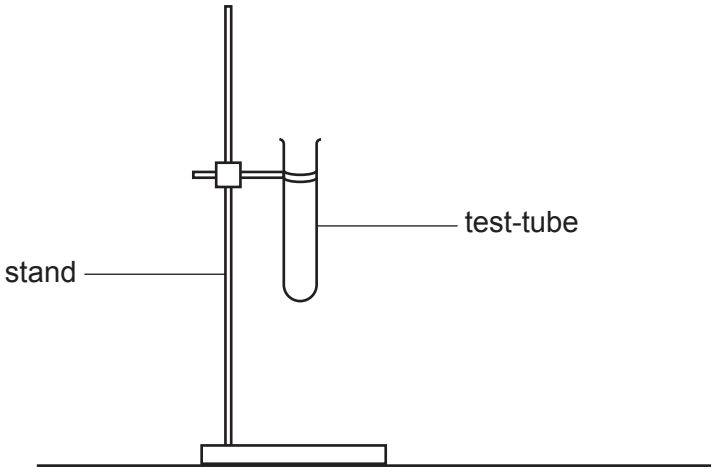

Fig. 2.1

- pours 200 cm^3 of cold water into a beaker
- pours hot water into the test-tube until it is approximately one-third full
- lowers the test-tube into the beaker of cold water until the level of the hot water in the test-tube is below the level of the cold water in the beaker as shown in Fig. 2.2
- places a thermometer into the test-tube
- waits for approximately 30 s before measuring the temperature and starting a stop-watch.

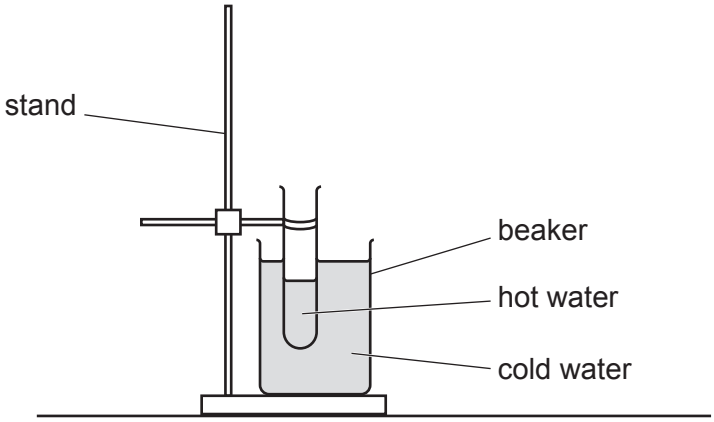

Fig. 2.2

© UCLES 2024

www.dynamicpapers.com

The student measures the temperature θ of the hot water in the test-tube.

The thermometer reading is shown in Fig. 2.3

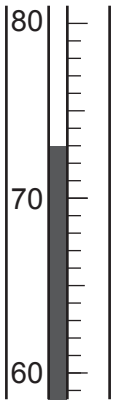

Fig. 2.3

Read the thermometer and record the temperature in Table 2.1 at time t = 0. [1]

Table 2.1

time t /	test-tube cooling in cold water temperature θ /	test-tube cooling in warm water temperature θ / .....
0		75
	54	68
	45	63
	41	58
	38	55
	36	35
	34	52

(b) The student measures the temperature θ of the hot water every 30 s for a further 180 s. The readings are shown in Table 2.1.

(i) Complete the column headings by adding appropriate units. [1]

(ii) Complete the time column. [1]

(c) Describe in detail **one** precaution that the student must take to make sure that the temperature measurements are as accurate as possible.

.....

..... [1]

www.dynamicpapers.com

(d) The student repeats the procedure in **(a)** and **(b)** but with 200 cm^3 of **warm** water instead of cold water in the beaker as shown in Fig. 2.4.

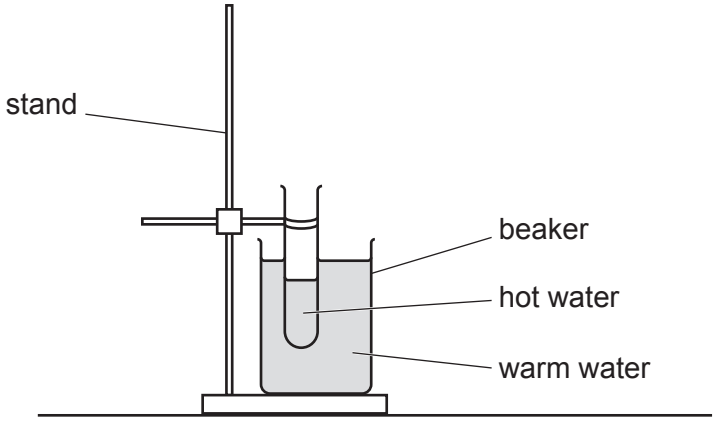

Fig. 2.4

The student's readings with warm water are shown in Table 2.1.

(i) One of the student's readings for warm water recorded in Table 2.1 is anomalous.

Identify the anomalous temperature reading and explain how you decided that the reading is anomalous.

anomalous reading .....

explanation .....

.....

[2]

(ii) Use the temperature readings in Table 2.1 to calculate the temperature decrease of the hot water in the test-tube after cooling for 180 s in both the beaker of cold water and the beaker of warm water.

temperature decrease when cooling in the cold water = ...

temperature decrease when cooling in the hot water = ...

[1]

© UCLES 2024

www.dynamicpapers.com

(e) (i) Use your answers to **(d)(ii)** to decide how the temperature of the water in the beaker affects the **rate** of cooling of hot water in the test-tube.

State your conclusion.

.....

.....

..... [2]

(ii) Suggest **one** improvement to the experimental procedure described in **(a)** and **(b)** that allows a more valid comparison to be made between the two rates of cooling.

.....

..... [1]

[Total: 10]

www.dynamicpapers.com

3 A student investigates the balancing of a metre rule which has a load of mass *M* fixed to it at the 5.0 cm mark.

The student:

- places a pivot under the 50.0 cm mark of the rule
- places another load of mass m = 50 g on the rule
- adjusts the position of the load with mass m = 50 g until the rule is as close to balanced as possible as shown in Fig. 3.1.

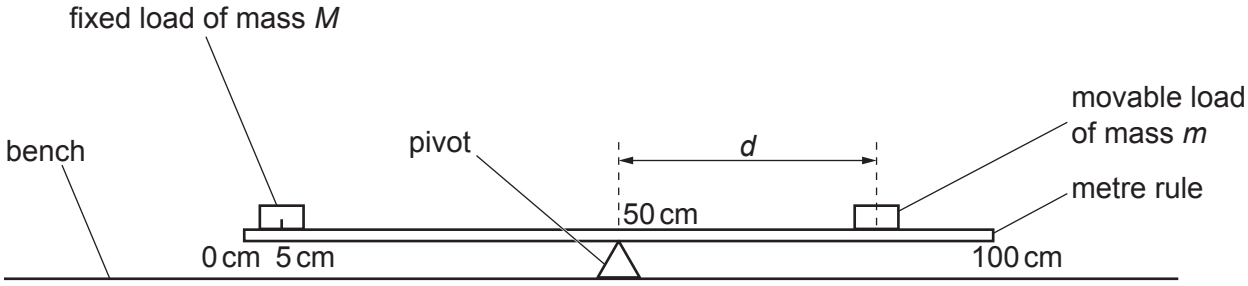

Fig. 3.1

Fig. 3.2 shows the position of the 50 g mass when the rule is balanced.

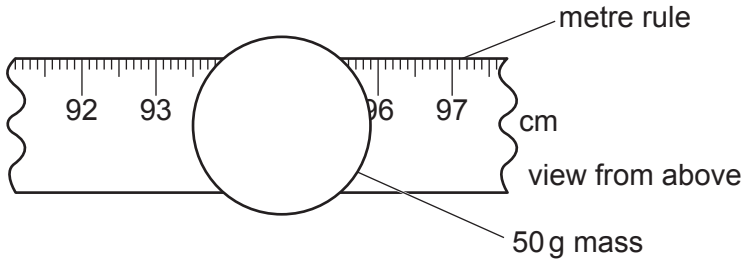

Fig. 3.2 (view from above)

(a) (i) Take readings from the rule and use them to determine the position of the centre of the 50 g mass on the rule.

position of the centre of the 50 g mass = ... cm [2]

(ii) Calculate the distance *d* from the **centre** of the 50 g mass to the 50.0 cm mark on the rule.

Record your answer on the answer line and in Table 3.1 on page 12.

d = ... cm [1]

© UCLES 2024

www.dynamicpapers.com

(iii) Calculate the value of $\frac{1000}{d}$.

Record your answer on the answer line and in Table 3.1 on page 12.

$\frac{1000}{d}$ = ... $\frac{1}{\text{cm}}$ [2]

(b) It is difficult to balance the rule exactly.

Describe a technique that the student uses to make sure that the value of d is as accurate as possible.

.....

.....

..... [1]

Question 3 continues over the page.

www.dynamicpapers.com

(c) The student repeats the procedure in **(a)** for values of mass m from 60 g to 100 g and records all the readings in Table 3.1.

Table 3.1

mass m / g	distance d / cm	$\frac{1000}{d} / \frac{1}{\text{cm}}$
50		
60	37.7	26.5
70	32.3	31.0
80	28.2	35.5
90	25.3	39.5
100	22.2	45.0

On the grid provided in Fig. 3.3 on page 13, plot a graph of m on the y-axis against $\frac{1000}{d}$ on the x-axis. The axes do not need to start from the origin (0, 0).

Draw the straight line of best fit. [4]

(d) **(i)** Calculate the gradient G of your line. Show all working and indicate on the graph the values you use.

G = ... [2]

(ii) The mass M of the load fixed to the rule can be determined using the equation:

$$M = 22.2 \times G$$

Use your value of G from **(d)(i)** to calculate the mass M of the load fixed to the rule.

M = ... g [1]

(e) Suggest why this method of determining the mass M of the fixed load is unsuitable if a movable load of mass m = 40 g is used.

.....

..... [1]

[Total: 14]

© UCLES 2024

www.dynamicpapers.com

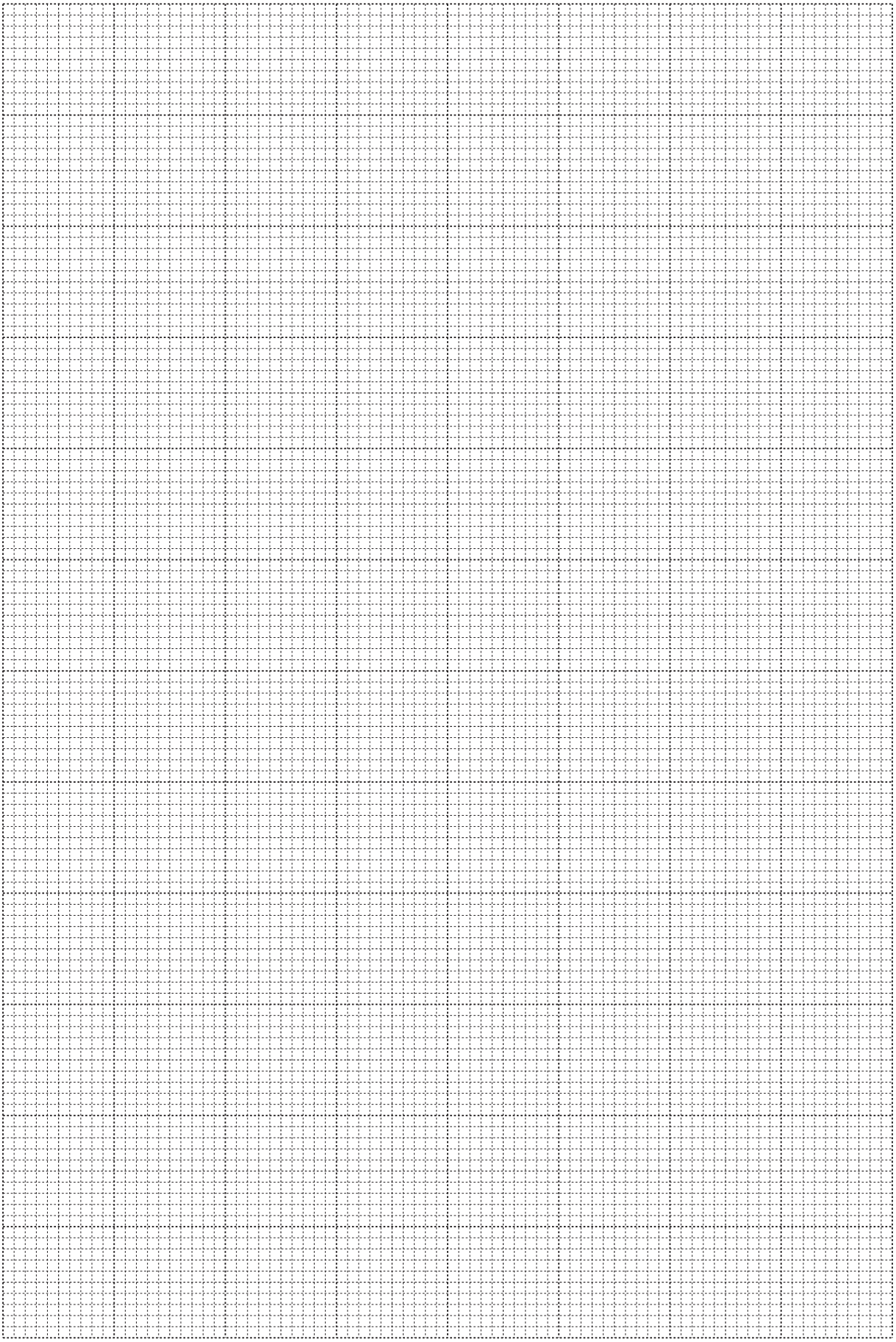

Fig. 3.3

www.dynamicpapers.com

4 A student has a converging (convex) lens and needs to determine its focal length.

Plan an experiment that will enable the student to measure an accurate value for the focal length *f* of the lens.

The focal length *f* of a lens can be calculated using the equation:

$$f = \frac{uv}{u + v}$$

where *u* is the distance between an object and the lens and *v* is the distance between the focussed image of the object and the lens.

Fig. 4.1 shows some of the apparatus available.

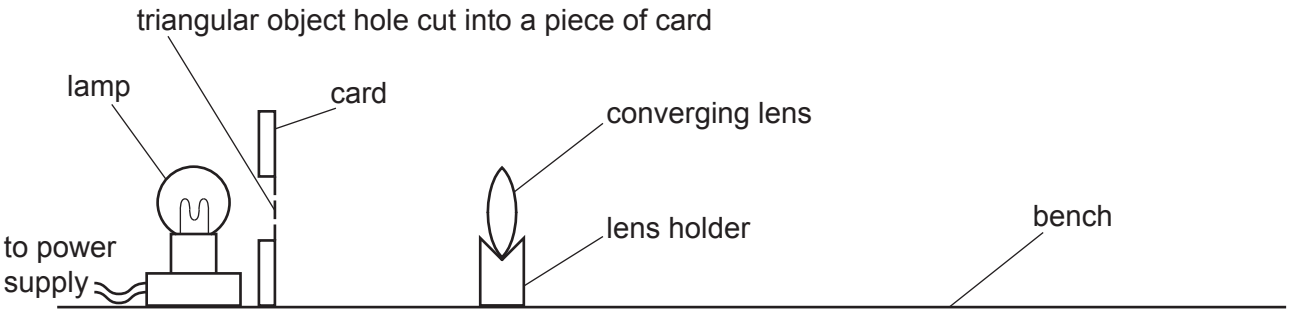

Fig. 4.1

The lamp is connected to a power supply and can be switched on and off as required.

Write a plan for the experiment.

In your plan you should:

- list any additional apparatus needed
- draw a diagram of the arrangement of the apparatus, labelling *u* and *v*
- explain briefly how to do the experiment
- state the steps taken to obtain a sharp, focussed image
- explain how to use your readings to determine *f*.

© UCLES 2024

www.dynamicpapers.com

.....

.....

.....

www.dynamicpapers.com

BLANK PAGE

Permission to reproduce items where third-party owned material protected by copyright is included has been sought and cleared where possible. Every reasonable effort has been made by the publisher (UCLES) to trace copyright holders, but if any items requiring clearance have unwittingly been included, the publisher will be pleased to make amends at the earliest possible opportunity.

To avoid the issue of disclosure of answer-related information to candidates, all copyright acknowledgements are reproduced online in the Cambridge Assessment International Education Copyright Acknowledgements Booklet. This is produced for each series of examinations and is freely available to download at www.cambridgeinternational.org after the live examination series.

Cambridge Assessment International Education is part of Cambridge Assessment. Cambridge Assessment is the brand name of the University of Cambridge Local Examinations Syndicate (UCLES), which is a department of the University of Cambridge.

© UCLES 2024