www.dynamicpapers.com

Cambridge Assessment International Education

Cambridge O Level

CANDIDATE NAME	
CENTRE NUMBER	
CANDIDATE NUMBER	

9572284243

PHYSICS **5054/32**

Paper 3 Practical Test **May/June 2024**

1 hour 30 minutes

You must answer on the question paper.

You will need: The materials and apparatus listed in the confidential instructions

INSTRUCTIONS

- Answer **all** questions.
- Use a black or dark blue pen. You may use an HB pencil for any diagrams or graphs.
- Write your name, centre number and candidate number in the boxes at the top of the page.
- Write your answer to each question in the space provided.
- Do **not** use an erasable pen or correction fluid.
- Do **not** write on any bar codes.
- You may use a calculator.
- You should show all your working and use appropriate units.

INFORMATION

- The total mark for this paper is 40.
- The number of marks for each question or part question is shown in brackets [ ].

For Examiner's Use	
1	
2	
3	
4	
Total	

This document has **16** pages. Any blank pages are indicated.

© UCLES 2024
[Turn over

www.dynamicpapers.com

1 In this experiment you will investigate the resistance of a diode when different currents flow through it.

You are provided with:

- a power source
- an ammeter
- a voltmeter
- a diode
- a 3.3 Ω resistor, a 6.8 Ω resistor and a 10 Ω resistor
- a switch
- a resistor labelled P
- two spare connecting leads.

The supervisor has set up the circuit shown in Fig. 1.1.

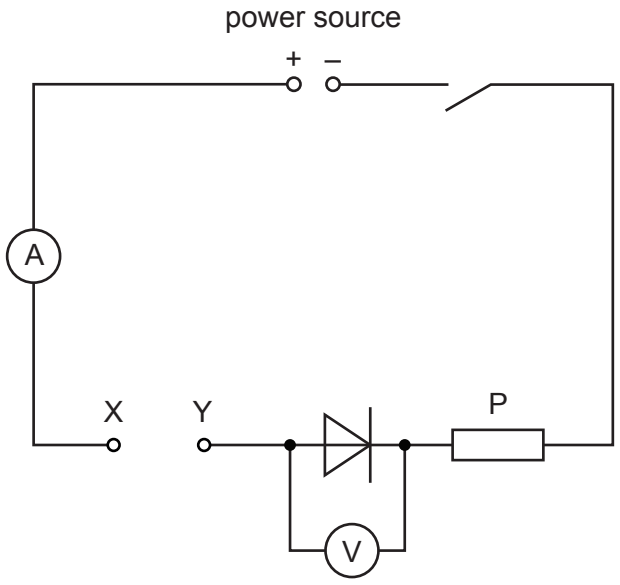

Fig. 1.1

(a)
- Use a spare connecting lead to connect the terminals X and Y together.
- Close the switch.
- Record the voltmeter reading *V* in the top row of Table 1.1.
- Record the ammeter reading *I* in the top row of Table 1.1.
- Open the switch and remove the connecting lead.

[2]

© UCLES 2024

www.dynamicpapers.com

Table 1.1

resistance between X and Y / Ω	voltmeter reading V / V	ammeter reading I / A	resistance R of diode / Ω
0			
3.3			
6.8			
10			

(b)
- Use both spare connecting leads to connect the 3.3 Ω resistor between terminals X and Y.
- Close the switch.
- Record the voltmeter reading V in Table 1.1.
- Record the ammeter reading I in Table 1.1.
- Open the switch and remove the connecting leads and the 3.3 Ω resistor.

[2]

(c) Repeat the procedure in **(b)** for the resistors of 6.8 Ω and 10 Ω. [1]

(d) Calculate the resistance R of the diode for each pair of readings of V and I, using the equation:

$$R = \frac{V}{I}$$

Record your answers in Table 1.1. [2]

(e) As the resistance between terminals X and Y is changed, the current in the circuit changes.

Examine your results in Table 1.1.

Describe how the change in **current** affects:

(i) the voltage across the diode .....

..... [1]

(ii) the resistance of the diode. .....

..... [1]

© UCLES 2024

[Turn over

www.dynamicpapers.com

(f) A student sets up a circuit using the diagram shown in Fig. 1.1.

The student finds that, when the connecting lead is connected across the terminals X and Y and the switch is closed, the ammeter does not give a reading.

The ammeter is not broken.

Suggest the error that the student has made while assembling the circuit.

.....

..... [1]

[Total: 10]

© UCLES 2024

www.dynamicpapers.com

2 In this experiment you will investigate the rate of cooling of hot water in a test-tube under different conditions.

You are provided with:

- a test-tube
- a 250 cm^3 glass beaker
- a thermometer, –10 °C to 110 °C, graduated in 1 °C intervals
- a 100 cm^3 or 250 cm^3 measuring cylinder
- a stop-watch
- a clamp, boss and stand
- a supply of hot water (approximately 80 °C)
- a supply of cold water (at room temperature)
- a supply of warm water (approximately 40 °C).

(a) The test-tube has been arranged as shown in Fig. 2.1.

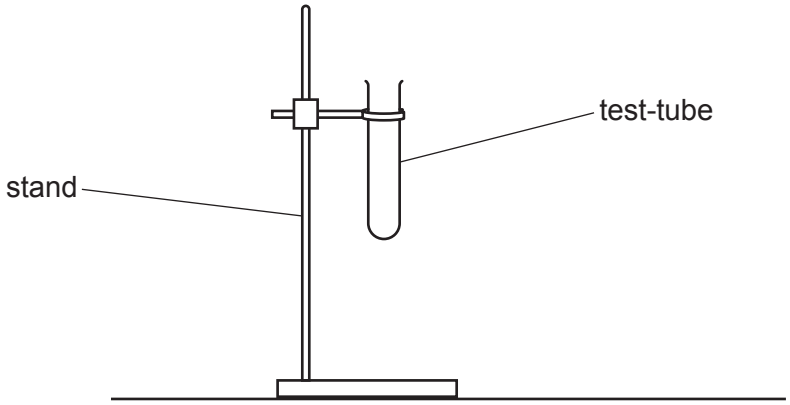

Fig. 2.1

- Pour 200 cm^3 of cold water into the beaker.
- Ask the supervisor to pour hot water into the test-tube until it is approximately one-third full.
- Lower the test-tube into the beaker of cold water until the level of the hot water in the test-tube is below the level of the cold water in the beaker. See Fig. 2.2.

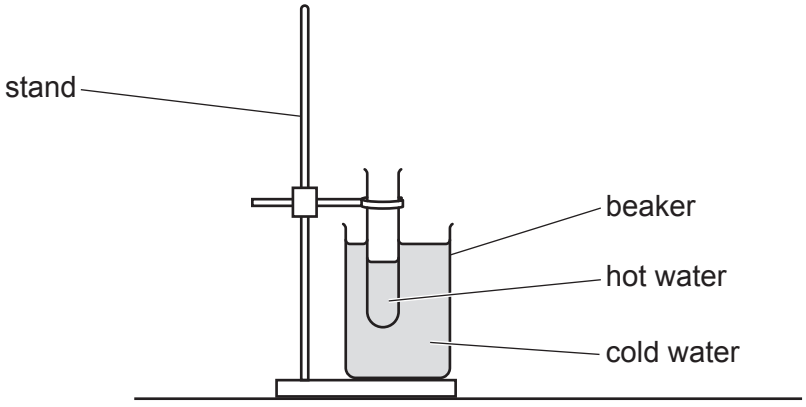

Fig. 2.2

- Place the thermometer into the test-tube.
- Wait for approximately 30 s before measuring the temperature and starting the stop-watch.

© UCLES 2024

[Turn over

www.dynamicpapers.com

(i) Measure the temperature θ of the hot water in the test-tube and start the stop-watch immediately.

Record the temperature at time $t = 0$ in the second column of Table 2.1. [1]

Table 2.1

time t/s	test-tube cooling in cold water temperature θ/°C	test-tube cooling in warm water temperature θ/°C
0		
30		
60		
90		
120		
150		
180		

(ii) Measure the temperature θ of the hot water every 30 s for 180 s. Record your readings in the second column of Table 2.1. [2]

(b) Describe in detail **one** precaution that you take to make sure that the temperature measurements are as accurate as possible.

.....

..... [1]

© UCLES 2024

www.dynamicpapers.com

(c)
- Empty the test-tube.
- Empty the cold water from the beaker.
- Pour 200 cm^3 of **warm** water into the beaker.
- Ask the supervisor to pour hot water into the test-tube until it is approximately one-third full.
- Lower the test-tube into the beaker of warm water until the level of the water in the test-tube is below the level of the warm water in the beaker.
- Place the thermometer into the test-tube.
- Wait for approximately 30 s before measuring the temperature and starting the stop-watch.

Repeat the steps described in **(a)(i)** and **(a)(ii)**, recording your results in the third column of Table 2.1. [2]

(d) Calculate the temperature decrease of the hot water in the test-tube after cooling for 180 s in both the beaker of cold water and the beaker of warm water.

Use your temperature readings in Table 2.1.

temperature decrease when cooling in the cold water = ... °C

temperature decrease when cooling in the warm water = ... °C
[1]

(e) (i) Use your answers to **(d)** to decide how the temperature of the water in the beaker affects the **rate** of cooling of hot water in the test-tube.

State your conclusion.

.....

.....

..... [2]

(ii) Suggest **one** improvement to the experimental procedure described in **(a)** and **(c)** that allows a more valid comparison to be made between the two rates of cooling.

.....

..... [1]

[Total: 10]

www.dynamicpapers.com

BLANK PAGE

© UCLES 2024

www.dynamicpapers.com

3 In this experiment you will investigate the balancing of a loaded metre rule.

You are provided with:

- a metre rule with a load of mass *M* fixed to it
- a pivot
- a set of 10 g slotted masses.

The position of the load has been fixed, with its centre directly above the 5.0 cm mark.

Do **not** attempt to adjust the position of the fixed load during the experiment.

(a)
- Place the pivot under the 50.0 cm mark of the rule.
- Using the 10 g slotted masses, place another load of mass m = 50 g on the rule.
- Adjust the position of the load of mass m = 50 g until the rule is as close to balanced as possible as shown in Fig. 3.1.

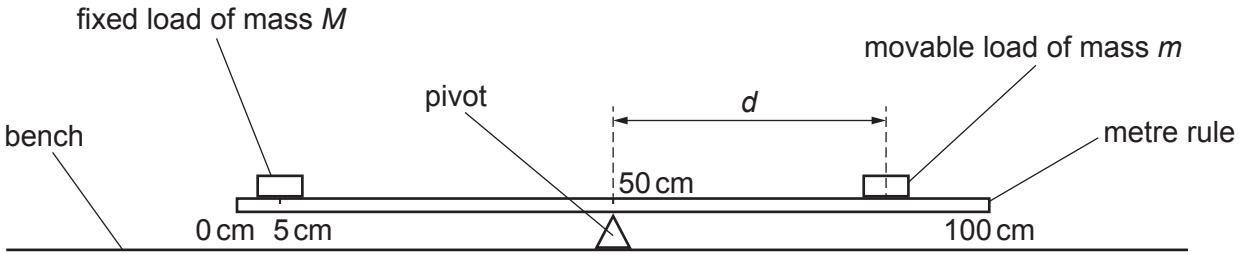

Fig. 3.1

Measure and record, to the nearest 0.1 cm, the distance d from the **centre** of the 50 g mass to the 50.0 cm mark on the rule when the rule is balanced.

d = ... cm [1]

www.dynamicpapers.com

(b) It is difficult to balance the rule exactly.

Describe the technique you use to make sure that your value of d is as accurate as possible.

.....

.....

..... [1]

(c) **(i)** Repeat **(a)** for values of mass m from 60 g to 100 g.

Record all your readings in Table 3.1. Include your readings from **(a)**.

Table 3.1

mass m / g	distance d / cm	$\frac{1000}{d} / \frac{1}{\text{cm}}$

[2]

(ii) Calculate the value of $\frac{1000}{d}$ for each value of d.

Record your values of $\frac{1000}{d}$ in Table 3.1 to an appropriate number of significant figures for this experiment. [2]

(d) On the grid provided in Fig. 3.2 on page 11, plot a graph of m on the y-axis against $\frac{1000}{d}$ on the x-axis. The axes do not need to start from the origin (0, 0).

Draw the straight line of best fit. [4]

(e) Calculate the gradient G of your line. Show all working and indicate on the graph the values you use.

G = ... [2]

© UCLES 2024

www.dynamicpapers.com

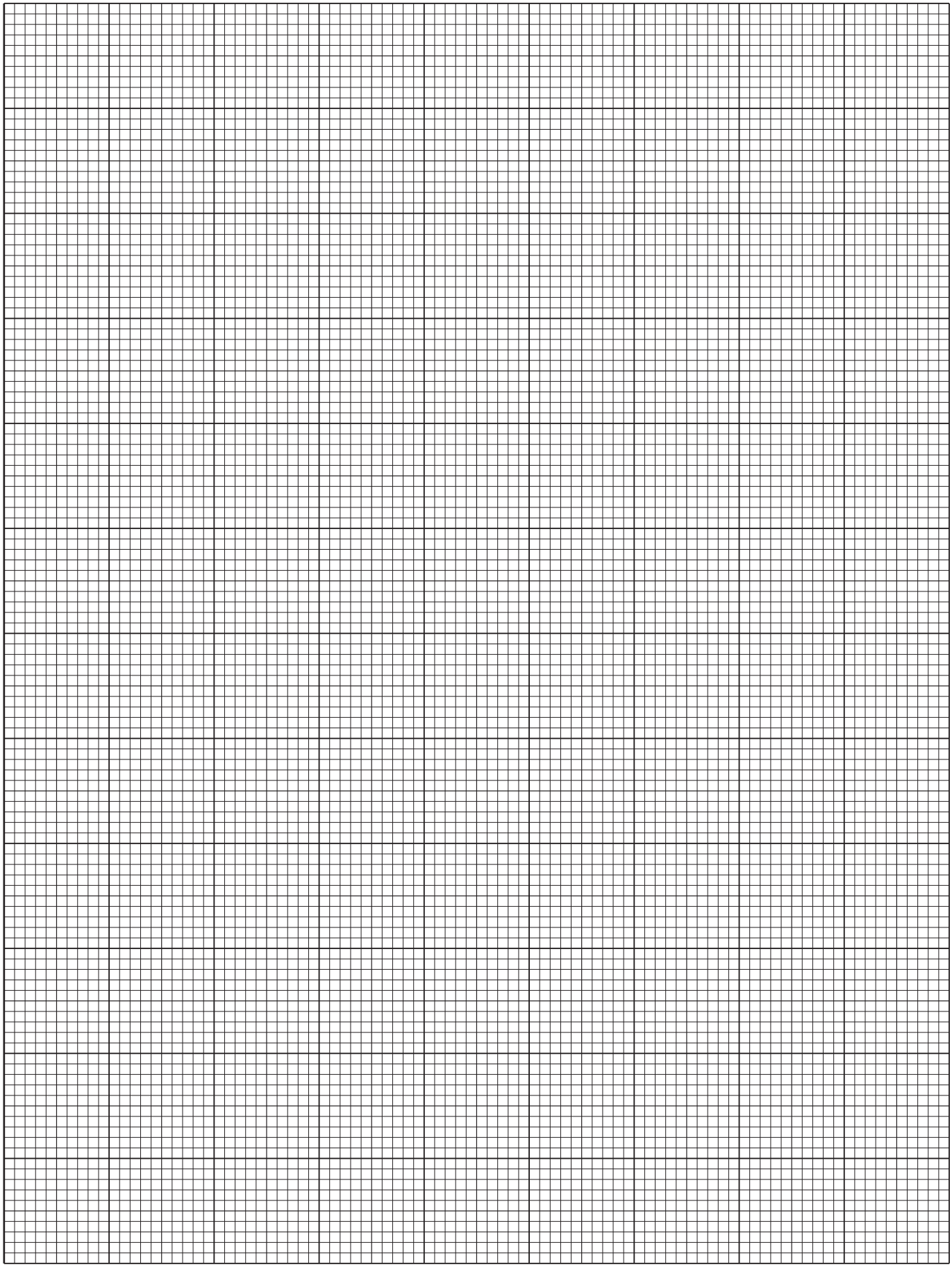

Fig 3.2

www.dynamicpapers.com

(f) The mass M of the load fixed to the rule can be determined using the equation:

$$M = 22.2 \times G$$

Use your value of G from **(e)** to calculate the mass M of the load fixed to the rule.

mass M = ... g [1]

(g) Suggest why this method of determining the mass M of the load fixed to the rule is unsuitable if a movable load of mass m = 40 g is used.

.....

..... [1]

[Total: 14]

© UCLES 2024

www.dynamicpapers.com

BLANK PAGE

www.dynamicpapers.com

4 A student has a converging (convex) lens and needs to determine its focal length.

Plan an experiment that will enable the student to measure an accurate value for the focal length *f* of the lens.

The focal length *f* of a lens can be calculated using the equation:

$$f = \frac{uv}{u + v}$$

where *u* is the distance between an object and the lens and *v* is the distance between the focussed image of the object and the lens.

Fig. 4.1 shows some of the apparatus available.

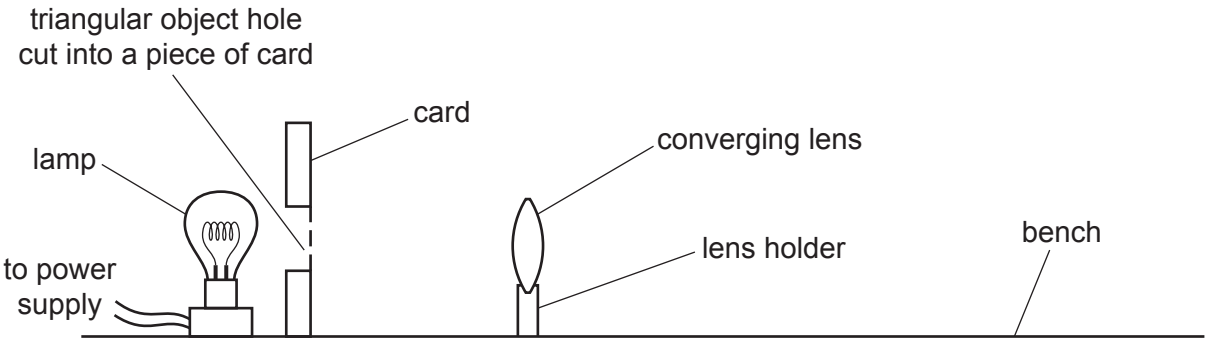

Fig. 4.1

The lamp is connected to a power supply and can be switched on and off as required.

Write a plan for the experiment.

You are not required to do this experiment.

In your plan you should:

- list any additional apparatus needed
- draw a diagram of the arrangement of the apparatus, labelling *u* and *v*
- explain briefly how to do the experiment
- state the steps taken to obtain a sharp, focussed image
- explain how to use your readings to determine *f*.

© UCLES 2024

www.dynamicpapers.com

.....

.....

.....

www.dynamicpapers.com

BLANK PAGE

Permission to reproduce items where third-party owned material protected by copyright is included has been sought and cleared where possible. Every reasonable effort has been made by the publisher (UCLES) to trace copyright holders, but if any items requiring clearance have unwittingly been included, the publisher will be pleased to make amends at the earliest possible opportunity.

To avoid the issue of disclosure of answer-related information to candidates, all copyright acknowledgements are reproduced online in the Cambridge Assessment International Education Copyright Acknowledgements Booklet. This is produced for each series of examinations and is freely available to download at www.cambridgeinternational.org after the live examination series.

Cambridge Assessment International Education is part of Cambridge Assessment. Cambridge Assessment is the brand name of the University of Cambridge Local Examinations Syndicate (UCLES), which is a department of the University of Cambridge.

© UCLES 2024