www.dynamicpapers.com

Cambridge Assessment International Education

Cambridge O Level

CANDIDATE NAME	
CENTRE NUMBER	
CANDIDATE NUMBER	

4466156570

PHYSICS **5054/31**

Paper 3 Practical Test **May/June 2024**

1 hour 30 minutes

You must answer on the question paper.

You will need: The materials and apparatus listed in the confidential instructions

INSTRUCTIONS

- Answer **all** questions.
- Use a black or dark blue pen. You may use an HB pencil for any diagrams or graphs.
- Write your name, centre number and candidate number in the boxes at the top of the page.
- Write your answer to each question in the space provided.
- Do **not** use an erasable pen or correction fluid.
- Do **not** write on any bar codes.
- You may use a calculator.
- You should show all your working and use appropriate units.

INFORMATION

- The total mark for this paper is 40.
- The number of marks for each question or part question is shown in brackets [ ].

For Examiner's Use	
1	
2	
3	
4	
Total	

This document has **16** pages. Any blank pages are indicated.

© UCLES 2024
[Turn over

www.dynamicpapers.com

1 You will find the volume of a small glass ball (marble) by two different methods.

You are provided with:

- six similar small glass balls (marbles)
- a metre rule fixed in place on the bench
- two set squares
- a 50 cm^3 measuring cylinder
- a 100 cm^3 beaker containing water
- access to a top-pan (electronic) balance
- paper towels.

(a) method 1

- Place six small glass balls by the side of the metre rule, as shown in Fig. 1.1.
- Make sure that there are no gaps between the balls.

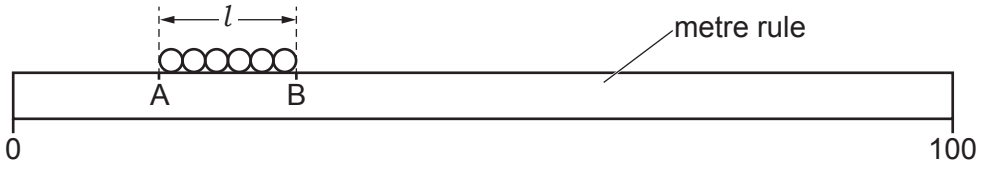

Fig. 1.1

(i) Use the set squares to help you take readings on the metre rule of the positions of points A and B, as shown in Fig. 1.1. Give your readings to the nearest 0.1 cm.

position of point A = ... cm

position of point B = ... cm
[1]

(ii) The length l is the distance between points A and B. The average diameter d of one ball can be found using the equation:

$$l = 6d$$

Use your answers to **(a)(i)** to find length l and diameter d. Give your answers to the nearest 0.1 cm.

l = ... cm

d = ... cm
[2]

© UCLES 2024

www.dynamicpapers.com

(iii) The average volume V of **one** glass ball found using this method is given by the equation:

$$V = \frac{3.14d^3}{6}$$

Calculate V.

V = ... cm^3 [1]

(b) method 2

- Pour water into the measuring cylinder until it is just over half full.

(i) Record the volume V_1 of the water in the measuring cylinder.

V_1 = ... cm^3 [1]

(ii) • **Carefully** add the six glass balls to the water in the measuring cylinder.

Record the new volume V_2 of the water and glass balls in the measuring cylinder.

V_2 = ... cm^3

The volume V_T of the six balls is given by the equation:

$$V_T = V_2 - V_1$$

Calculate V_T.

V_T = ... cm^3 [1]

(iii) • Remove the glass balls from the measuring cylinder and dry them using the paper towel.

Calculate the average volume V of **one** ball found using this method.

V = ... cm^3 [1]

© UCLES 2024

[Turn over

www.dynamicpapers.com

(c) Suggest whether **method 1** or **method 2** gives the more accurate value for the volume of the ball.

Explain your answer.

method giving more accurate value .....

explanation .....

.....

.....

[1]

(d) The average mass of a glass ball can be found using a small beaker and a top-pan balance.

Find the average mass of one glass ball using the small beaker and the top-pan balance supplied.

Describe your method and record the readings you take.

method .....

.....

.....

readings

mass of one glass ball = ... g

[2]

[Total: 10]

© UCLES 2024

www.dynamicpapers.com

2 In this experiment, you will investigate how the temperature of the surroundings affects the rate of cooling of water.

You are provided with:

- stop-watch
- a 250 cm^3 beaker
- a larger beaker (500 cm^3 or 600 cm^3)
- a thermometer
- a supply of hot water
- a supply of mixed ice and water
- paper towels to mop up spillages.

(a) Ask the supervisor to pour approximately 100 cm^3 of hot water into the 250 cm^3 beaker.

(i) Measure the temperature θ of the water and immediately start the stop-watch. Record this temperature in the first row of Table 2.1. [1]

(ii) Record in Table 2.1 the temperature θ of the water every 30 s for 4 minutes.

Table 2.1

t/s	θ/°C
0	
30	
60	
90	
120	
150	
180	
210	
240	

Empty the 250 cm^3 beaker when you have finished taking the temperature of the water in it. [1]

© UCLES 2024

[Turn over

www.dynamicpapers.com

(iii) Calculate the average cooling rate C_1 of the water for the first 90 s of the experiment. Use your readings in Table 2.1 and the equation:

$$C_1 = \frac{\theta_0 - \theta_{90}}{t}$$

where θ_0 is the temperature at 0 s, θ_{90} is the temperature at 90 s and t is the time of 90 s.

Give the unit for C_1.

C_1 = ... unit ..... [2]

(iv) Calculate the average cooling rate C_2 of the water for the final 90 s of the experiment. Use the equation:

$$C_2 = \frac{\theta_{150} - \theta_{240}}{t}$$

where θ_{150} is the temperature of the water at 150 s, θ_{240} is the temperature of the water at 240 s and t is the time of 90 s.

C_2 = ... unit ..... [1]

(v) Compare your values of C_1 and C_2. Explain any difference in these values.

.....

.....

..... [1]

© UCLES 2024

www.dynamicpapers.com

(b) Pour approximately 100 cm^3 of iced water into the larger beaker.

Ask the supervisor to pour approximately 100 cm^3 of hot water into the 250 cm^3 beaker.

Carefully place the 250 cm^3 beaker of hot water into the larger beaker of iced water as shown in Fig. 2.1.

Make sure that the water from the larger beaker does not spill into the smaller beaker.

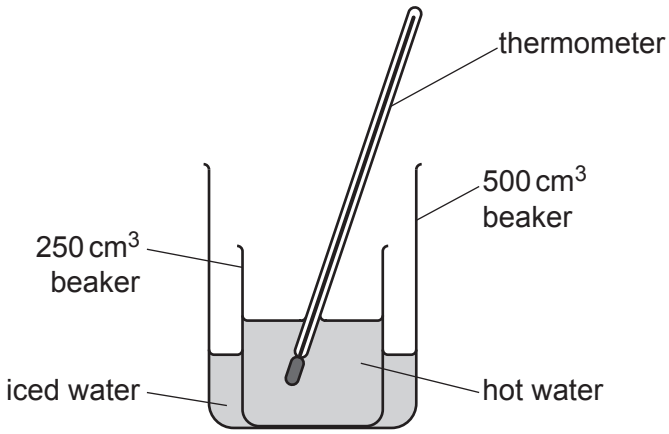

Fig. 2.1

(i) Measure the temperature θ of the hot water and immediately start the stop-watch.

Record, in Table 2.2, the temperature θ at times t = 0 s, 30 s, 60 s, 90 s and 120 s.

Table 2.2

t / s	θ / °C

[1]

www.dynamicpapers.com

(ii) Calculate the average cooling rate C_3 for the first 90 s of the experiment.

Use your readings in Table 2.2 and the equation:

$$C_3 = \frac{\theta_0 - \theta_{90}}{t}$$

C_3 = ... unit ..... [1]

(iii) Describe how C_3 differs from C_1. Explain your answer.

.....

.....

..... [1]

(iv) State **one** variable that you should keep constant to make a valid comparison of C_1 and C_3.

.....

..... [1]

[Total: 10]

© UCLES 2024

www.dynamicpapers.com

3 In this experiment, you will find the focal length of a convex lens.

You are provided with:

- a lamp
- a piece of card with a shape cut out to be the illuminated object
- a screen
- a convex lens
- a metre rule.

Fig. 3.1 shows the apparatus. The apparatus is set up for you to use.

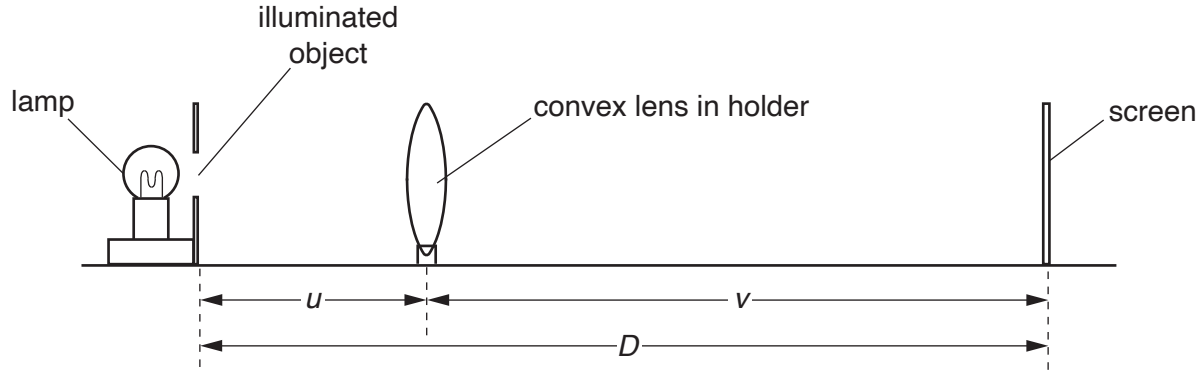

Fig. 3.1

Fig. 3.2 shows the shape of the illuminated object.

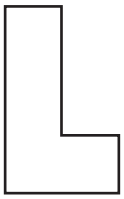

Fig. 3.2

(a)
- Switch on the lamp.
- Place the screen a distance D = 60.0 cm from the illuminated object.
- Place the lens between the object and the screen so that the lens is about 10 cm away from the illuminated object.
- Move the lens slowly away from the illuminated object until a clearly focused image is formed on the screen.

(i) Describe **two** differences between the illuminated object and its image on the screen.

1 .....

.....

2 .....

.....

[2]

www.dynamicpapers.com

(ii) Measure the distance u between the centre of the lens and the illuminated object for $D = 60.0\,\text{cm}$.

Record your value for u to the nearest 0.1 cm in Table 3.1.

Table 3.1

D / cm	u / cm	v / cm	$(u \times v)$ / cm^2
60.0			
70.0			
80.0			
90.0			
100.0			

[1]

(iii) Deduce the distance v between the centre of the lens and the screen for $D = 60.0\,\text{cm}$. Record your value for v to the nearest 0.1 cm in Table 3.1. [1]

(iv) Repeat the procedure in the stem of **(a)**, **(a)(ii)** and **(a)(iii)** using values of $D = 70.0\,\text{cm}$, 80.0 cm, 90.0 cm and 100.0 cm. Record all your values for u and v in Table 3.1. [1]

(v) Calculate $(u \times v)$ for each value of D and record your answers in Table 3.1. Give your values to 3 significant figures. [2]

(b) Use the grid provided in Fig. 3.3 on page 11 to plot a graph of $(u \times v)$ / cm^2 on the y-axis against D / cm on the x-axis.

You do not need to start your axes at the origin (0,0).

Draw the straight line of best fit. [4]

(c) The focal length f of the lens is numerically equal to the gradient of the line.

Calculate the gradient of the line. Show all working and indicate on your graph in Fig. 3.3 the values you use.

$f =$ ..... cm [2]

© UCLES 2024

www.dynamicpapers.com

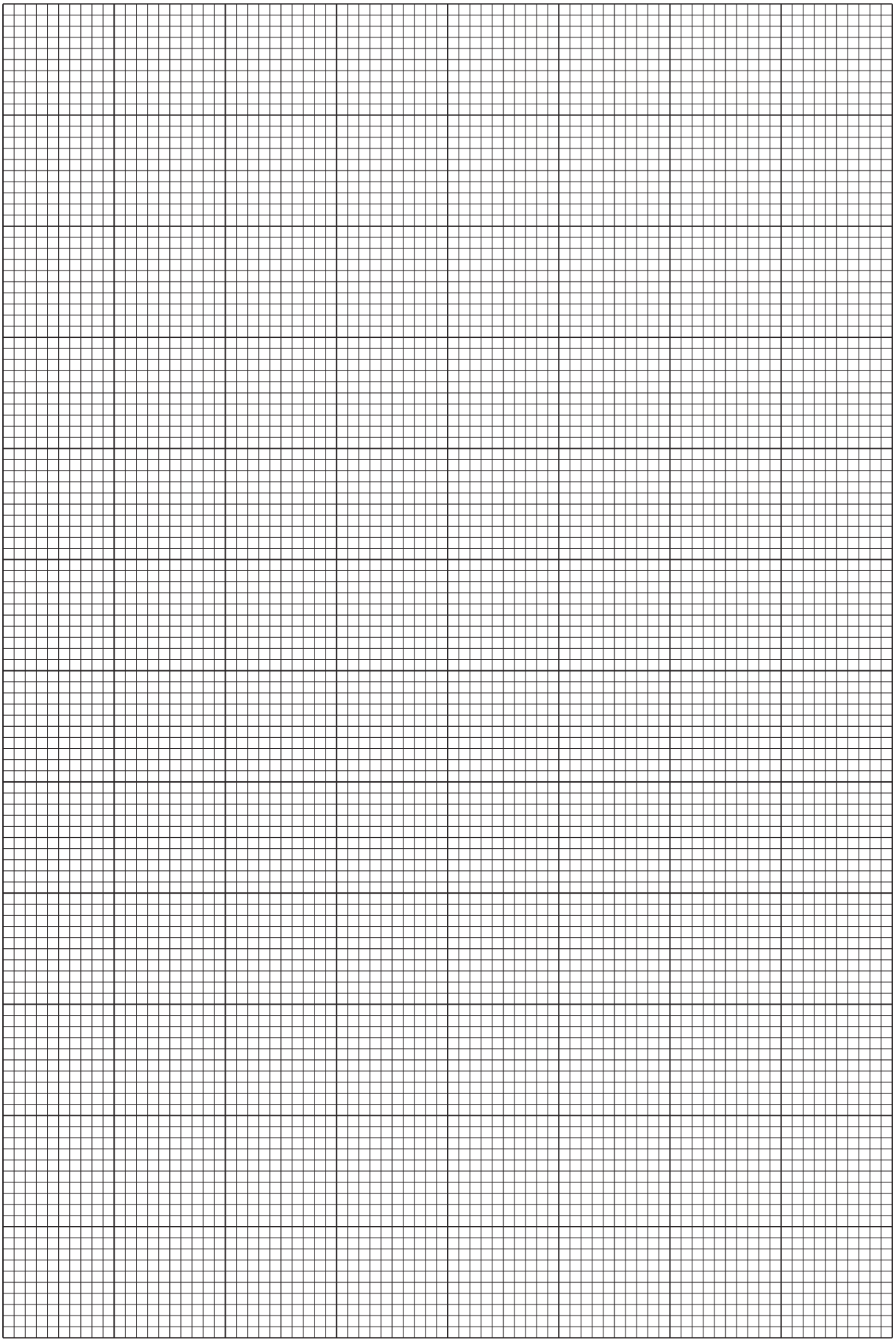

Fig. 3.3

www.dynamicpapers.com

(d) The lens manufacturer states that the focal length of the lens is 15.0 cm ± 10%.

Decide, with a calculation, whether your value of *f* agrees with this statement and tick the box that shows your answer.

calculation:

☐ my value for *f* **agrees** with the manufacturer's statement

☐ my value for *f* **does not agree** with the manufacturer's statement. [1]

[Total: 14]

© UCLES 2024

www.dynamicpapers.com

BLANK PAGE

www.dynamicpapers.com

4 Plan an experiment to investigate how the thickness of a metal wire affects its resistance.

The resistance of a wire can be found using the equation:

$$\text{resistance of wire} = \frac{\text{potential difference (p.d.) across wire}}{\text{current in the wire}}$$

The following apparatus is available:

- six lengths of metal wire, each of different thickness
- an ammeter
- a voltmeter
- a power supply
- several connecting leads
- a micrometer.

Other apparatus normally available in a school laboratory can also be used.

You are not required to do this experiment.

In your plan, you should:

- draw a circuit diagram to show how you will use the apparatus
- explain briefly how to carry out the investigation
- state the key variables to keep constant
- draw a table, with column headings, to show how to display readings (you are not required to enter any readings in the table)
- explain how to use these readings to reach a conclusion.

.....

.....

.....

.....

© UCLES 2024

www.dynamicpapers.com

.....

.....

.....

www.dynamicpapers.com

BLANK PAGE

Permission to reproduce items where third-party owned material protected by copyright is included has been sought and cleared where possible. Every reasonable effort has been made by the publisher (UCLES) to trace copyright holders, but if any items requiring clearance have unwittingly been included, the publisher will be pleased to make amends at the earliest possible opportunity.

To avoid the issue of disclosure of answer-related information to candidates, all copyright acknowledgements are reproduced online in the Cambridge Assessment International Education Copyright Acknowledgements Booklet. This is produced for each series of examinations and is freely available to download at www.cambridgeinternational.org after the live examination series.

Cambridge Assessment International Education is part of Cambridge Assessment. Cambridge Assessment is the brand name of the University of Cambridge Local Examinations Syndicate (UCLES), which is a department of the University of Cambridge.

© UCLES 2024