www.dynamicpapers.com

Cambridge Assessment International Education

Cambridge O Level

PHYSICS **5054/32**

Paper 3 Practical Test **May/June 2023**

CONFIDENTIAL INSTRUCTIONS

7030544496

This document gives details of how to prepare for and administer the practical exam.

The information in this document and the identity of any materials supplied by Cambridge International are confidential and must NOT reach candidates either directly or indirectly.

The supervisor must complete the report at the end of this document and return it with the scripts.

INSTRUCTIONS

- If you have any queries regarding these confidential instructions, contact Cambridge International stating the centre number, the syllabus and component number and the nature of the query.
  email info@cambridgeinternational.org
  phone +44 1223 553554

DC (CJ/SG) 316508/2
© UCLES 2023

[Turn over

www.dynamicpapers.com

General information about practical exams

Centres must follow the guidance on science practical exams given in the *Cambridge Handbook*.

Safety

Supervisors must follow national and local regulations relating to safety and first aid.

Only those procedures described in the question paper should be attempted.

Supervisors must inform candidates that materials and apparatus used in the exam should be treated with caution. Suitable eye protection should be used where necessary.

The following hazard codes are used in these confidential instructions, where relevant:

C	corrosive	**MH**	moderate hazard
HH	health hazard	**T**	acutely toxic
F	flammable	**O**	oxidising
N	hazardous to the aquatic environment		

Hazard data sheets relating to substances used in this exam should be available from your chemical supplier.

Before the exam

- The packets containing the question papers must **not** be opened before the exam.
- It is assumed that standard school laboratory facilities, as indicated in the *Guide to Planning Practical Science*, will be available.
- Spare materials and apparatus for the tasks set must be available for candidates, if required.

During the exam

- It must be made clear to candidates at the start of the exam that they may request spare materials and apparatus for the tasks set.
- Where specified, the supervisor **must** perform the experiments and record the results as instructed. This must be done **out of sight** of the candidates, using the same materials and apparatus as the candidates.
- Any assistance provided to candidates must be recorded in the supervisor's report.
- If any materials or apparatus need to be replaced, for example, in the event of breakage or loss, this must be recorded in the supervisor's report.

After the exam

- The supervisor must complete a report for each practical session held and each laboratory used.
- Each packet of scripts returned to Cambridge International must contain the following items:
  - the scripts of the candidates specified on the bar code label provided
  - the supervisor's results relevant to these candidates
  - the supervisor's reports relevant to these candidates
  - seating plans for each practical session, referring to each candidate by candidate number
  - the attendance register.

© UCLES 2023

www.dynamicpapers.com

Specific information for this practical exam

During the exam, the supervisor (**not** the invigilator) must do the experiments in Questions 1, 2 and 3 and record the results on a spare copy of the question paper, clearly labelled 'supervisor's results'.

Question 1

Items to be supplied by the centre (per set of apparatus, unless otherwise specified):

- a disposable drinks cup with a total capacity of approximately 200 cm^3 (see Note 1)
- a 30 cm ruler with a millimetre scale
- a metre rule with a millimetre scale
- approximately 80 cm of thin string or thread
- a 250 cm^3 measuring cylinder
- a supply of water (see Note 2).

Notes

1 Identical cups with slanted sides must be supplied for all candidates.

2 Approximately 300 cm^3 of water is required by each candidate.

Action at Changeover

The measuring cylinder must be emptied. The supply of water must be replenished.

Information required by Examiners

A sample set of numerical results, clearly marked 'supervisor's results', obtained out of sight of the candidates. Please provide us with a photograph of the cups used along with the supervisor's results.

© UCLES 2023

[Turn over

www.dynamicpapers.com

Question 2

Items to be supplied by the centre (per set of apparatus, unless otherwise specified):

- a power source of approximately 3 V (see Note 1)
- ammeter capable of measuring current with a minimum resolution of 0.05 A and a full scale deflection of at least 1.00 A
- voltmeter capable of measuring the supply p.d. with a minimum resolution of 0.1 V and a full scale deflection of at least 5.0 V
- three resistors of nominal value 10 Ω with a minimum power rating of 1 W (see Note 2)
- three identical lamps in suitable holders. Any low voltage lamps will suffice, e.g., RS 106-313 (2.5 V, 0.3 A), provided that they glow when connected in parallel with the power source (see Note 2)
- a switch – this can be an integral part of the power supply
- sufficient connecting leads to set up the circuit shown in Fig. 2.1 (see Note 3)
- one additional connecting lead to be placed by the side of the circuit.

Notes

1 The following are suitable power sources:

- two 1.5 V dry cells in suitable holders connected in series
- two 1.2 V rechargeable cells in suitable holders connected in series
- power supply of 2–3 V.

Where candidates are supplied with a power supply with a variable output voltage, the voltage setting should be set by the supervisor and fixed (e.g., taped).

2 The resistors and lamp holders must all have suitable terminals so that candidates can easily and quickly rearrange the circuit.

© UCLES 2023

www.dynamicpapers.com

3 The circuit is to be set up for candidates as shown in Fig. 2.1, using the resistors. The lamps must be placed on the laboratory bench together with the one extra connecting lead, placed close to the circuit.

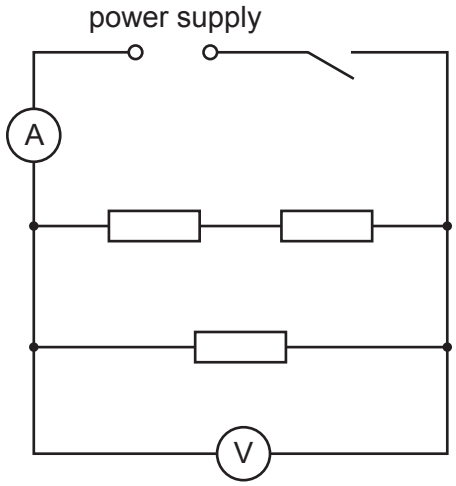

Fig. 2.1

Action at Changeover

Reconnect the circuit as shown in Fig. 2.1.

Information required by Examiners

A sample set of numerical results, clearly marked ‘supervisor’s results’, obtained out of sight of the candidates.

© UCLES 2023

[Turn over

www.dynamicpapers.com

Question 3

Items to be supplied by the centre (per set of apparatus, unless otherwise specified):

- a converging lens with focal length f = 15 cm, with a suitable holder
- a metre rule with a millimetre scale
- a 30 cm ruler with a millimetre scale
- an illuminated object consisting of a piece of white card with a triangular hole cut in it (see Note 1)
- a white screen with support (see Note 2)
- a lamp with a suitable power supply to be used to illuminate the triangular object (see Note 1).

Notes

1 The object is made by cutting a hole in the shape of an equilateral triangle of side 3.0 cm in the card (see Fig. 3.1). The triangular hole must be covered with translucent paper (e.g., tracing paper). The illumination can be provided by a low voltage lamp, approximately 24 W with a suitable power supply.

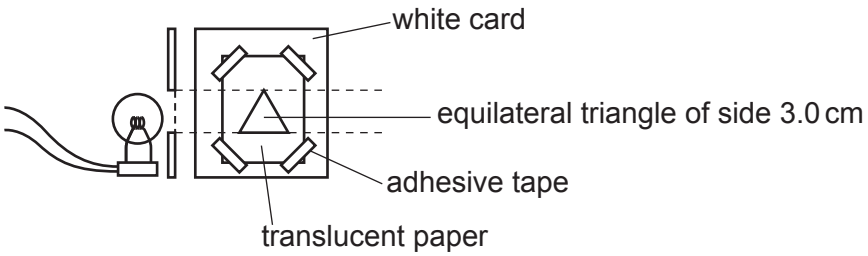

Fig. 3.1

2 The screen can be made from a sheet of white card approximately 15 cm × 15 cm. Some means of supporting the screen vertically must be provided (e.g., fixing the white card to a small block of wood – see Fig. 3.2).

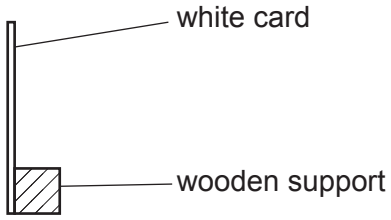

Fig. 3.2

3 The lamp acting as a light source, the centre of the triangular hole in the object card and the centre of the lens in its holder must be arranged to be the same height above the bench.

© UCLES 2023

www.dynamicpapers.com

Action at Changeover

Check that the apparatus is intact and still working.
Replace the screen if it has been marked.
Switch off the lamp.

Information required by Examiners

A sample set of numerical results, clearly marked ‘supervisor’s results’, obtained out of sight of the candidates.

Question 4

Planning question – no apparatus is required for this question.

www.dynamicpapers.com

BLANK PAGE

www.dynamicpapers.com

BLANK PAGE

www.dynamicpapers.com

BLANK PAGE

Permission to reproduce items where third-party owned material protected by copyright is included has been sought and cleared where possible. Every reasonable effort has been made by the publisher (UCLES) to trace copyright holders, but if any items requiring clearance have unwittingly been included, the publisher will be pleased to make amends at the earliest possible opportunity.

To avoid the issue of disclosure of answer-related information to candidates, all copyright acknowledgements are reproduced online in the Cambridge Assessment International Education Copyright Acknowledgements Booklet. This is produced for each series of examinations and is freely available to download at www.cambridgeinternational.org after the live examination series.

Cambridge Assessment International Education is part of Cambridge Assessment. Cambridge Assessment is the brand name of the University of Cambridge Local Examinations Syndicate (UCLES), which is a department of the University of Cambridge.

© UCLES 2023

www.dynamicpapers.com

Supervisor's report

Syllabus and component number | | | | | / | | |

Centre number | | | | | |

Centre name .....

Time of the practical session .....

Laboratory name/number .....

Give details of any difficulties experienced by the centre or by candidates (include the relevant candidate names and candidate numbers).

You must include:

- any difficulties experienced by the centre in the preparation of materials
- any difficulties experienced by candidates, e.g. due to faulty materials or apparatus
- any specific assistance given to candidates.

© UCLES 2023

[Turn over

www.dynamicpapers.com

Declaration

1 Each packet that I am returning to Cambridge International contains all of the following items:
- the scripts of the candidates specified on the bar code label provided
- the supervisor's results relevant to these candidates
- the supervisor's reports relevant to these candidates
- seating plans for each practical session, referring to each candidate by candidate number
- the attendance register.

2 Where the practical exam has taken place in more than one practical session, I have clearly labelled the supervisor's results, supervisor's reports and seating plans with the time and laboratory name/number for each practical session.

3 I have included details of difficulties relating to each practical session experienced by the centre or by candidates.

4 I have reported any other adverse circumstances affecting candidates, e.g. illness, bereavement or temporary injury, directly to Cambridge International on a *special consideration form*.

Signed ..... (supervisor)

Name (in block capitals) .....

© UCLES 2023