www.dynamicpapers.com

Cambridge Assessment International Education

Cambridge O Level

PHYSICS **5054/31**

Paper 3 Practical Test **May/June 2023**

CONFIDENTIAL INSTRUCTIONS

0293468636

This document gives details of how to prepare for and administer the practical exam.

The information in this document and the identity of any materials supplied by Cambridge International are confidential and must NOT reach candidates either directly or indirectly.

The supervisor must complete the report at the end of this document and return it with the scripts.

INSTRUCTIONS

- If you have any queries regarding these confidential instructions, contact Cambridge International stating the centre number, the syllabus and component number and the nature of the query.
  email info@cambridgeinternational.org
  phone +44 1223 553554

DC (CJ/SG) 316502/3
© UCLES 2023

www.dynamicpapers.com

General information about practical exams

Centres must follow the guidance on science practical exams given in the *Cambridge Handbook*.

Safety

Supervisors must follow national and local regulations relating to safety and first aid.

Only those procedures described in the question paper should be attempted.

Supervisors must inform candidates that materials and apparatus used in the exam should be treated with caution. Suitable eye protection should be used where necessary.

The following hazard codes are used in these confidential instructions, where relevant:

C	corrosive	**MH**	moderate hazard
HH	health hazard	**T**	acutely toxic
F	flammable	**O**	oxidising
N	hazardous to the aquatic environment		

Hazard data sheets relating to substances used in this exam should be available from your chemical supplier.

Before the exam

- The packets containing the question papers must **not** be opened before the exam.
- It is assumed that standard school laboratory facilities, as indicated in the *Guide to Planning Practical Science*, will be available.
- Spare materials and apparatus for the tasks set must be available for candidates, if required.

During the exam

- It must be made clear to candidates at the start of the exam that they may request spare materials and apparatus for the tasks set.
- Where specified, the supervisor **must** perform the experiments and record the results as instructed. This must be done **out of sight** of the candidates, using the same materials and apparatus as the candidates.
- Any assistance provided to candidates must be recorded in the supervisor's report.
- If any materials or apparatus need to be replaced, for example, in the event of breakage or loss, this must be recorded in the supervisor's report.

After the exam

- The supervisor must complete a report for each practical session held and each laboratory used.
- Each packet of scripts returned to Cambridge International must contain the following items:
  - the scripts of the candidates specified on the bar code label provided
  - the supervisor's results relevant to these candidates
  - the supervisor's reports relevant to these candidates
  - seating plans for each practical session, referring to each candidate by candidate number
  - the attendance register.

© UCLES 2023

www.dynamicpapers.com

Specific information for this practical exam

During the exam, the supervisor (**not** the invigilator) must do the experiments in Questions 1, 2 and 3 and record the results on a spare copy of the question paper, clearly labelled ‘supervisor’s results’.

© UCLES 2023

www.dynamicpapers.com

Question 1

Items to be supplied by the centre (per set of apparatus, unless otherwise specified):

- 50 g metal mass at 100 °C (see Note 1)
- string
- 100 cm^3 beaker labelled 'A' (see Note 2)
- supply of water in a 250 cm^3 beaker labelled 'B' (see Note 3)
- supply of boiling water (see Note 4)
- thermometer: –10 °C to 110 °C, graduated in 1 °C intervals
- a small piece of adhesive putty (see Note 5)
- supply of paper towels to mop up any spillages.

Notes

1. A length of string must be tied securely at one end to a 50 g mass. A mass that is made from brass is suitable. The mass may be made from, e.g. five 10 g slotted masses tied together. Steel or other alloy may be used but the mass used must fit into beaker A. All candidates at the centre must use masses made from the same type of metal alloy.

2. If the beaker does not have a graduation at 25 cm^3, an indelible mark must be drawn on the side of the beaker at the 25 cm^3 level and labelled **25 cm^3**. The beaker must be made from heat resistant glass (e.g. Pyrex) commonly used in laboratory experiments.

3. Each candidate will need at least 50 cm^3 of water at room temperature in beaker B.

4. This could be a large heat proof beaker (e.g. Pyrex) or pan of boiling water, heated by either a bunsen burner or a hot plate. An electric kettle which switches off when the water inside boils is also suitable.

The supervisor must take care that the beaker (or pan or kettle) does not boil dry.

Each 50 g mass must be placed in a beaker (or pan or kettle) with the string hanging over the side.

Sufficient beakers (or pans or kettles) should be placed around the lab so that each candidate can move to one easily and without disturbing other candidates. Several 50 g masses may be placed in the same beaker (or pan or kettle). The strings must be kept away from the heat sources by, e.g. passing them over a rod that is above and to the side.

Each candidate will lift **one** mass from a beaker (or pan or kettle).

Supervisors should ensure that there is no danger of the beaker (or pan or kettle) tipping when a candidate removes a mass.

Each mass should be heated for approximately (at least) five minutes before the candidate uses it.

5. Use the small piece of adhesive putty to attach the thermometer to the bench and stop it rolling around or falling to the floor.

© UCLES 2023

www.dynamicpapers.com

Action at changeover

The supervisor should ensure that all the masses on strings are returned to the heating station and heated to 100 °C for the next candidates. Water must be emptied out of the 100 cm^3 beaker and the thermometer must be placed on the bench. Cold water must be available in the 250 cm^3 beaker.

Information required by examiners

Sample set of numerical results, clearly marked “supervisor’s results”, obtained out of sight of the candidates. Identify the type of metal from which the mass is made e.g. brass or steel etc. A photograph of the masses used is helpful.

© UCLES 2023

[Turn over

www.dynamicpapers.com

Question 2

Items to be supplied by the centre (per set of apparatus, unless otherwise specified):

- battery of cells (see Note 1)
- switch or plug key
- thermometer: –10 °C to 110 °C, graduated in 1 °C intervals
- small piece of adhesive putty (see Note 2)
- 250 cm^3 beaker, containing ice and water
- fixed resistor of resistance 470 Ω
- thermistor (see Note 3)
- voltmeter capable of measuring a potential difference of up to 5.0 V to a precision of 0.1 V or better – an analogue or digital meter is suitable
- at least six connecting leads (see Note 4)
- paper towels to mop up any spillages.

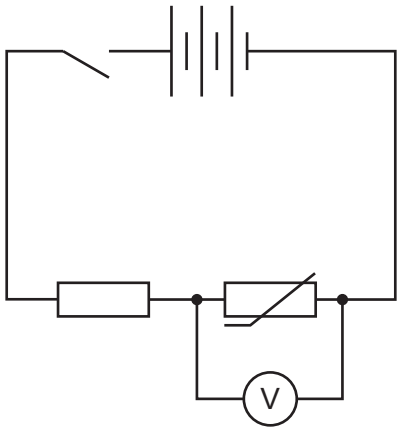

Fig. 2.1

Notes

1. Three 1.5 V dry cells in a suitable holder connected in series.

2. The thermometer should be lying on the bench with scale uppermost and fixed in place using the small piece of adhesive putty. It should be near the circuit but away from the area the candidate will use to write his or her answers.

3. A suitable disc thermistor has a resistance of about 500 Ω at 25 °C. The RS component code of such a thermistor is RS 191-2229. The thermistor needs to be attached by long leads so that the thermistor can be placed in the beaker of ice and water without disturbing the rest of the circuit.

4. The supervisor must use the connecting leads to assemble the circuit shown in Fig. 2.1.

© UCLES 2023

www.dynamicpapers.com

Action at changeover

Restore the circuit to the configuration shown in Fig. 2.1, making sure the thermistor is on the bench. Replenish the ice and water in the beaker.

Information required by examiners

Sample set of numerical results, clearly marked “supervisor’s results”, obtained out of sight of the candidates.

© UCLES 2023

[Turn over

www.dynamicpapers.com

Question 3

Items to be supplied by the centre (per set of apparatus, unless otherwise specified):

- string (see Note 1)
- pulley with a diameter of 50 mm (see Note 2)
- two 100 g mass hangers labelled A and B or one 100 g mass hanger and one 100 g mass (see Note 2)
- stand, boss and clamp
- one piece of adhesive putty of approximate mass 5 g, labelled '5.0 g' (see Note 3)
- four pieces of adhesive putty each of mass 2.0 g (see Note 4)
- metre rule
- stop-watch reading to 0.1 s or better
- a heavy weight or G-Clamp (see Note 5).

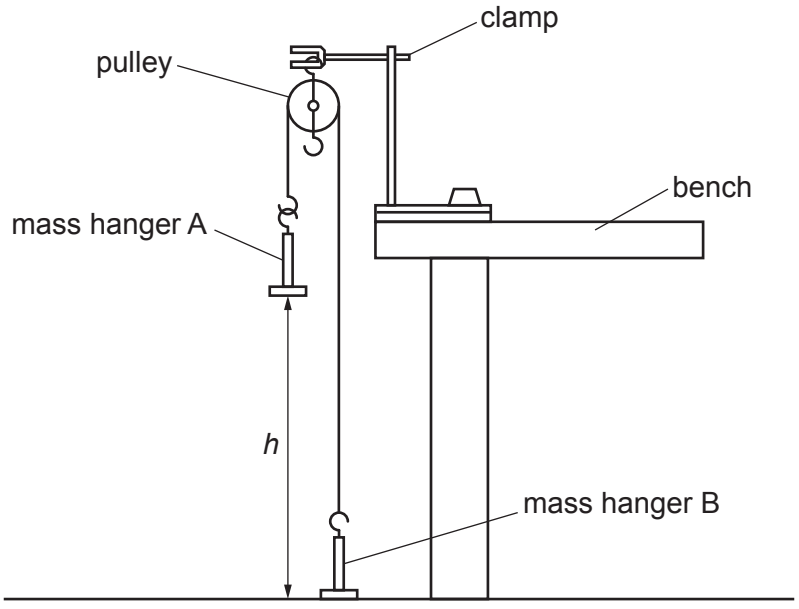

Fig. 3.1

© UCLES 2023

www.dynamicpapers.com

Notes

1. The type of string that should be used is twine, which is separate strands twisted together as shown in Fig. 3.2.

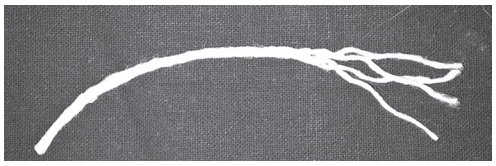

Fig. 3.2

Cotton twine of thickness 2 mm, containing four twisted strands of cotton, is most suitable and all candidates must be provided with the same type of twine. Twine is commonly available in stationery shops.

A length of 2 mm diameter twine or string should be cut and loops tied at each end. The total length of the twine should be approximately 145 cm. With the mass hangers placed on the ends of the loops as shown in Fig. 3.1, the position of the clamp should be adjusted so that the base of mass hanger A is 98 cm ± 1 cm above the floor and mass hanger B is resting on the floor.

2. The pulley must have a large enough diameter and the mass hangers must be small enough so that they are able to pass each other without colliding with each other or the bench. If the mass hangers collide as they pass, mass hanger B can be replaced with a 10 g mass hanger loaded with 9 additional 10 g weights.

3. The supervisor should determine the mass of adhesive putty that is **just** sufficient, when placed on mass hanger A, to cause the mass hanger to fall slowly all the way to the floor when given a very small push. A mass of around 5 g to 6 g should be sufficient. This mass must be placed on a piece of card that is labelled “5.0 g” regardless of the true value.

4. Four pieces of adhesive putty each of mass 2.0 g should be rolled into balls and placed on a piece of card that is labelled “2.0 g”.

5. To prevent the stand toppling over it should be secured to the bench by placing a heavy weight on the base or by fastening it with a G-clamp.

Action at changeover

The supervisor must ensure that the apparatus is in the configuration shown in Fig. 3.1. The pieces of adhesive putty must be placed on the correct cards as described in Notes 3 and 4.

Information required by examiners

Sample set of numerical results, clearly marked “supervisor’s results”, obtained out of sight of the candidates.

© UCLES 2023

[Turn over

www.dynamicpapers.com

Question 4

No items are needed for this planning question.

Permission to reproduce items where third-party owned material protected by copyright is included has been sought and cleared where possible. Every reasonable effort has been made by the publisher (UCLES) to trace copyright holders, but if any items requiring clearance have unwittingly been included, the publisher will be pleased to make amends at the earliest possible opportunity.

To avoid the issue of disclosure of answer-related information to candidates, all copyright acknowledgements are reproduced online in the Cambridge Assessment International Education Copyright Acknowledgements Booklet. This is produced for each series of examinations and is freely available to download at www.cambridgeinternational.org after the live examination series.

Cambridge Assessment International Education is part of Cambridge Assessment. Cambridge Assessment is the brand name of the University of Cambridge Local Examinations Syndicate (UCLES), which is a department of the University of Cambridge.

© UCLES 2023

www.dynamicpapers.com

Supervisor's report

Syllabus and component number | | | | | / | | |

Centre number | | | | | |

Centre name .....

Time of the practical session .....

Laboratory name/number .....

Give details of any difficulties experienced by the centre or by candidates (include the relevant candidate names and candidate numbers).

You must include:
- any difficulties experienced by the centre in the preparation of materials
- any difficulties experienced by candidates, e.g. due to faulty materials or apparatus
- any specific assistance given to candidates.

© UCLES 2023

[Turn over

www.dynamicpapers.com

Declaration

1 Each packet that I am returning to Cambridge International contains all of the following items:
- the scripts of the candidates specified on the bar code label provided
- the supervisor's results relevant to these candidates
- the supervisor's reports relevant to these candidates
- seating plans for each practical session, referring to each candidate by candidate number
- the attendance register.

2 Where the practical exam has taken place in more than one practical session, I have clearly labelled the supervisor's results, supervisor's reports and seating plans with the time and laboratory name/number for each practical session.

3 I have included details of difficulties relating to each practical session experienced by the centre or by candidates.

4 I have reported any other adverse circumstances affecting candidates, e.g. illness, bereavement or temporary injury, directly to Cambridge International on a *special consideration form*.

Signed ..... (supervisor)

Name (in block capitals) .....

© UCLES 2023